FOOD & BEVERAGE

PMA® Cable Protection

Flexibility and cleanability for the food and beverage industry



Meeting ever more stringent requirements PMA® Cable Protection in the food and beverage industry

Produced at a world-leading facility in Switzerland, PMA Systems is today the international benchmark for performance and durability in cable protection systems in countless applications and markets.

ABB has been developing, manufacturing, and supplying its PMA high-specification cable protection systems for more than 40 years.

Produced at a world-leading facility in Switzerland, PMA conduit is today the international benchmark for performance and durability in cable protection systems in countless applications and markets.

PMA conduit protects vital cables against mechanical and other environmental factors – an especially critical function in sectors with strict requirements on hygiene and cleanliness.

PMA conduit has the physical flexibility to withstand rapid and continued movement, even in tight bending radii, as well as being extremely strong, maintaining its integrity and performance over extended periods.

Drawing on its extensive pedigree in cable protection, ABB developed the first PMA conduit to feature a corrugated design especially for the food and beverage industry, the result of intensive effort by ABB's dedicated research & development team.

To meet ever more stringent demands for rapid and effective washdown, the latest incarnation of PMA products, known as JFBD, incorporates for the first time an overextruded non-porous FDA-compliant material, delivering further enhanced cleanability alongside unrivalled resistance to aggressive chemicals to ECOLAB standards.

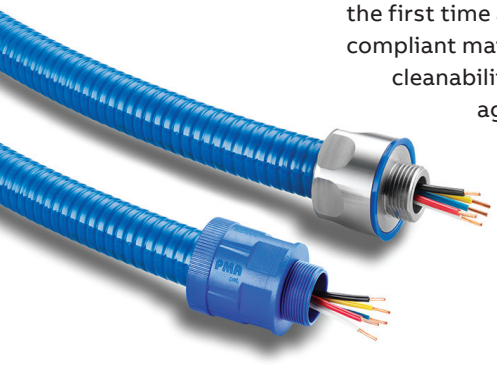

The fully IP69-rated range also offers a choice of two high specification fittings. The JENQ single-piece fitting is made from 316L stainless steel and is ideally suited to areas with the highest hygienic demands. The JKNH nylon fitting is made from FDA-compliant material, and offers both excellent chemical resistance and quick installation, without the need for tools.

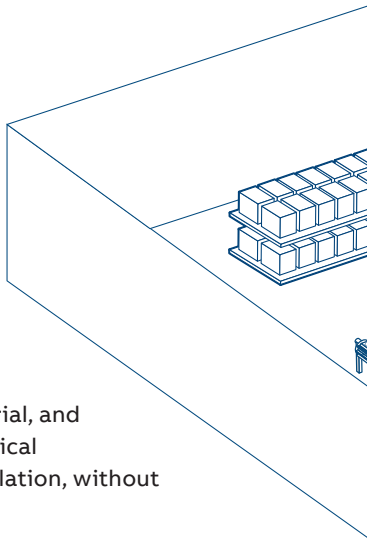

Part of an exclusive cable protection portfolio covering all levels of protection requirements for the food and beverage industry, PMA conduit, with either the JENQ stainless steel or JKNH nylon fitting, offers a truly flexible and cost-effective solution backed by the unrivalled sector experience of ABB.

PMA conduit, with stainless steel fitting, nylon fitting and stainless steel P-Clip for reliable fixation, offers a truly flexible and cost-effective solution backed by the unrivalled sector experience of ABB.

Dynamic applications
In dynamic applications such as robotics, strength is vital. With its unrivalled resistance to dynamic loads and high reverse bending stresses, PMA offers a long-life solution which is rapid and easy to assemble, saving on installation time.

Packing equipment
PMA JFBD conduit, complete with JKNH nylon fittings, can be quickly installed without the need for any specialist tools. Nylon fittings are ideally suited to both static and flexible applications such as packing equipment.

For production equipment
PMA JFBD conduit has a unique, easy-to-clean, smooth, non-porous and chemical-resistant outer layer made from FDA-compliant material. When used in combination with the JENQ single-piece stainless steel fitting, it represents a complete solution for when the highest standards of cleanability are required ideally recommended for indoor food zone - non contact.

Any component used in a food processing area must be completely clean before production commences. For ABB, quality is a law and customers can rely on the company's extensive technological know-how and materials expertise.

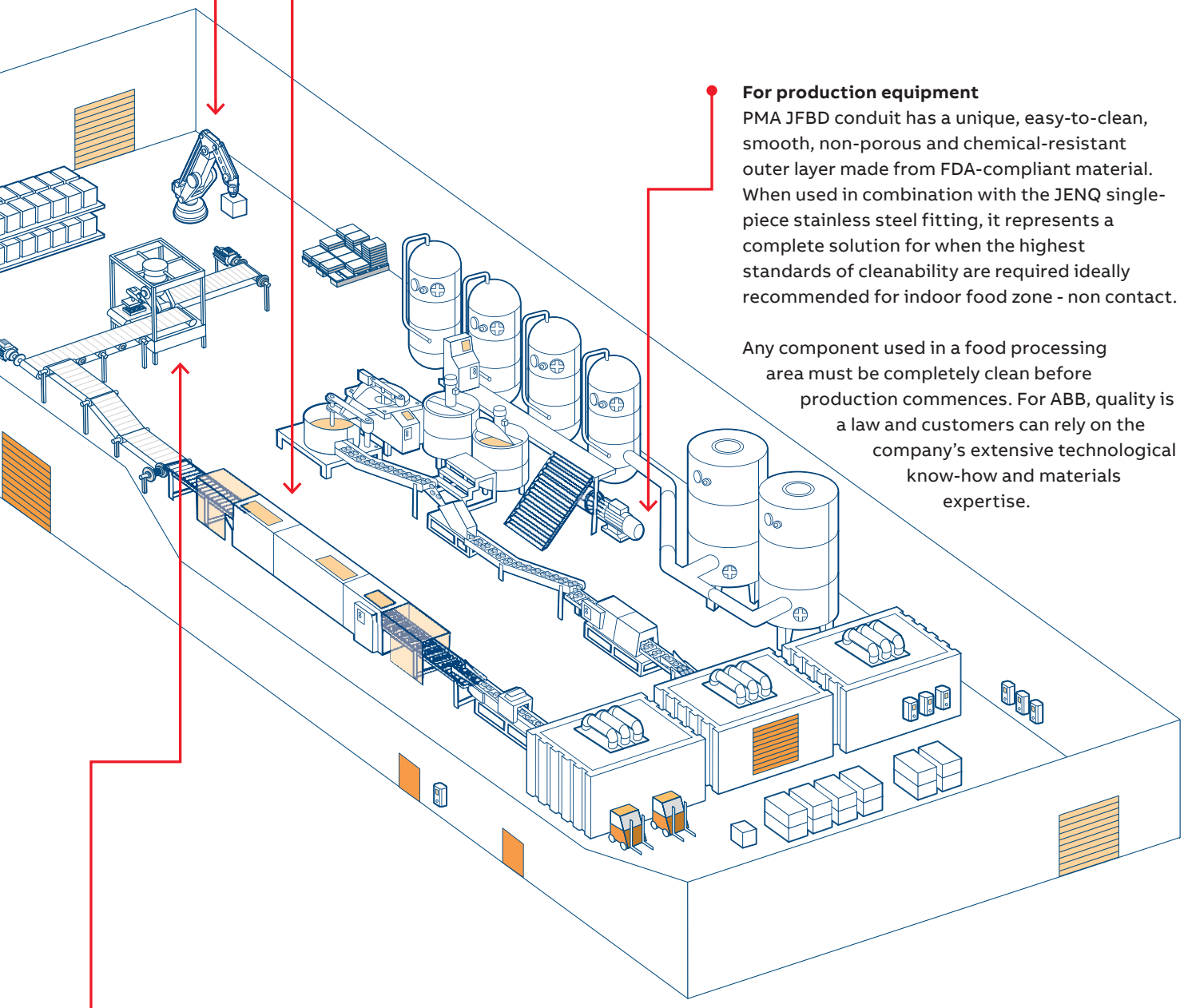

For pick and place systems
Modern pick and place systems are characterised by continuous and rapid movements. Thanks to its outstanding flexibility and mechanical properties, PMA represents the ideal solution for these areas.

Part of an extensive cable protection portfolio covering all levels of protection requirements for the food and beverage industry.

Meeting ever more stringent requirements PMA® Cable Protection in the food and beverage industry

The food and beverage sector is subject to ever-increasing scrutiny and regulation around the cleanliness of production and storage areas.

This places a significant responsibility on producers of the machinery and individual components used in food processing applications to ensure they can be quickly and easily cleaned at the end of each shift in readiness for the next cycle of production.

Even components which may have no direct contact with food products must be able to withstand the daily – or even more frequent – application of aggressive cleaning agents, with no effect on performance.

Meanwhile, the continued growth and sophistication of automation in all areas of food processing places a particular requirement on the conduits which house vital cabling to offer multi-directional flexibility without any physical deterioration over extended periods.

Cleanability of components in food environments is critical to their efficacy, ensuring a sterile environment which is safe for ongoing production. Ideally, components must be sufficiently clean after a standard washdown process to allow production to resume, without delays for additional or deep cleaning to tackle stubborn residues.





01

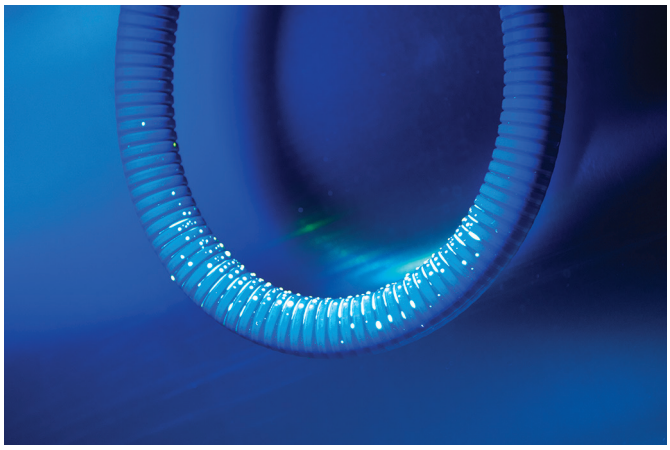

02



03



04

—
01 Spraying a solution of Riboflavin over a length of the conduit.
—
02 UV light: With Riboflavin being highly fluorescent, bright areas indicates contamination with Riboflavin before wash down.
—
03 Washed down with tap water.
—
04 All visible traces of Riboflavin had been removed from PMA conduit after the first washdown.

A variety of testing methods for cleanability can be selected depending on the application; for this product, the Riboflavin test for low-germ or sterile process technologies, developed by the VDMA, a leading European mechanical industry association, was chosen.

Established as a highly reliable means of assessing the cleanability of components in production areas where hygiene is paramount, the test in this instance involved spraying a solution of Riboflavin (Vitamin B2) all over a length of the overextruded PMA conduit, as well as a regular conduit not covered with the over extruded coating.

The conduits were washed down with tap water, then transferred to a darkened room where UV light was applied to it. With Riboflavin being highly fluorescent, any bright areas would indicate where the standard washdown process had been ineffective in removing the solution.

As might have been expected, the entirely unprotected regular conduit still harboured significant detectable fluorescence, requiring extensive additional washdown to achieve a sufficiently clean surface.

Proven cleanability
On the new PMA conduit with its overextruded jacket, all visible traces of Riboflavin had been removed after the first washdown – demonstrating clearly the prowess of the latest PMA conduit as a truly easy-to-clean solution.

Combining the PMA JFDB conduit with the stainless steel fitting, or the nylon fitting, together with the stainless steel P-Clip, offers a complete end-to-end cable protection solution for the food production sector.

There are no exposed crevices for food residues to collect, meaning they remain on the surface and so can be easily removed by standard cleaning methods.

The PMA solution offers unrivalled resistance to the corrosive effects of cleaning agents and chemicals, in tandem with excellent mechanical properties, outstanding flexibility with the ability to withstand tight bending radii, and efficient, space - and time-saving fitting and assembly.

The ultimate in cleanability
PMA® Cable Protection in the food and beverage industry

Key to any cable protection system – especially in the food and beverage sector – is its ability to safeguard the cables against the ingress of liquids and small solid particles.

In the food and beverage sector, the paramount importance of hygiene and cleanliness means equipment is regularly subjected to highly rigorous cleaning procedures.

The methods of achieving the necessary level of hygiene varies widely some with high pressure water jets some with lower pressure wash down.

International Ingress Protection (IP) standards provide a globally accredited method to qualify a range of components for their performance in preventing the ingress of dust and water.

Ingress protection (IP) up to IP69 with PMA cable protection solution.

The PMA F&B conduit systems fulfil all the applicable IP ratings, IP65 and IP66 (high volume lower pressure) and IP69 (high pressure/ high temperature) for the various cleaning methods applied.

Products classified to either IP65 or IP66 are able to protect against low-power and high-power jet water. However, these IP ratings focus primarily on water volume rather than pressure, bringing the importance of the IP69 rating to the fore. Products accredited to the IP69 standard, such as the PMA food and beverage cable protection portfolio from ABB, will maintain their integrity and performance against hot water applied at pressures of up to 80 bar – in line with all processes commonly used for wash-down in the food and beverage sector. It doesn't matter if high pressure or low pressure methods.

The combination of IP69 rated and ECOLAB certified products – such as the PMA food and beverage solution – is the perfect choice for any systems subjected to regular cleaning and sanitisation. Ultimately, at times of increased focus on cleaning practice and effectiveness, the PMA food and beverage cable protection portfolio from ABB can offer peace of mind to



—
01 PMA cable protection provides outstanding flexibility combined with easy push-in assembly.
—
02 The PMA F&B conduit systems fulfil IP69 for the various cleaning methods applied.



01

specifiers and system designers that it will deliver in the vital areas of cleanability and ingress protection – irrespective of the cleaning and wash-down methods employed.

Transferring the benefits of nylon conduit to the food and beverage sector

Delivering effective cable protection in the food and beverage sector means overcoming a series of challenging operating conditions, including mechanical properties and mitigating the effects of sustained high-pressure wash-downs and chemical disinfection.

Corrugated nylon conduit has long been a go-to cable protection solution for industrial manufacturers, given its flexibility, inherent strength, ability to cope with frequent and fast movement, and effective performance in both static and dynamic operation. To help ensure food and beverage manufacturers can benefit from these, PMA has developed an innovative cable protection system, combining all the proven performance attributes of corrugated conduit with the additional benefit of a smooth, easy-to-clean outer layer made from FDA-compliant material. This comprises of JFBD nylon conduit, complete with either a stainless steel (JENQ) or nylon (JKNH) fitting depending on the specific application use.



02

Starting with the highly successful PMA corrugated nylon conduit system, the product undergoes a further innovative production stage which involves over-extruding a completely smooth, and therefore easy-to-clean, coating onto the outer layer of the conduit. The result is a conduit that has outstanding mechanical properties coupled with industry-leading cleanability and resistance to chemical agents.

However, in order to give food and beverage manufacturers ultimate confidence in the efficacy of the system, the PMA JFBD conduit has been subjected to the Riboflavin test.



The system's outstanding performance in the Riboflavin test underlines its status as the go-to solution for food and beverage manufacturers looking for the ultimate in cleanability. Given its inherent strength and durability, it can be used in various dynamic and static applications, including conveyor systems, production and packing equipment, and pick and place systems.

Now, food and beverage manufacturers can specify the use of nylon conduit systems throughout their facility, safe in the knowledge that they will not only benefit from the flexibility and durability of a nylon conduit, but from a system that it is easy to clean and hygienic.

Type JFBD-nylon conduit

Flexible, easy to clean over-extruded conduit.
Suitable for a clean and hygienic environment.

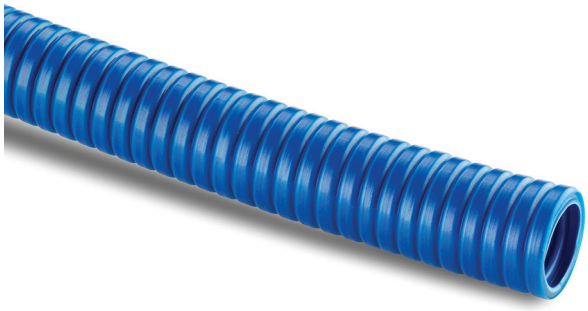

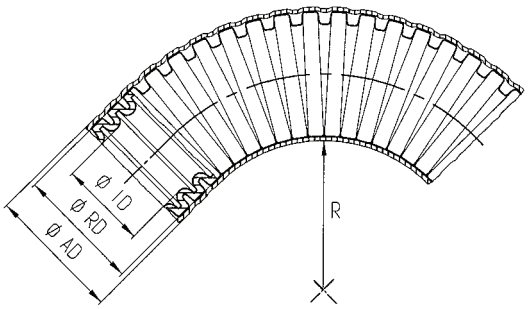

Features

- Smooth easy to clean out layer
- High reversed bending stresses
- Excellent flexibility in combination with high strength
- High resistance to chemicals and cleaning agents
- For indoor food zone - non contact
- Outer layer made from FDA compliant material

Approvals
CE, cULus, NSF, ECOLAB

IP Rating	Appropriate Fitting
For use with: Type JENQ, JKNH and JKBH fitting	
IP68	Yes
IP69	Yes

METRIC Part no:	Conduit Size		Dimensions				
	Metric (mm)	NW	øAD	øRD	øID	Stat. R	Dyn. R
JFBDT-12C01	16	12	16.0mm	15.8mm	11.8mm	70.0mm	100mm
JFBDG-17C01	20	17	21.6mm	21.2mm	15.6mm	85.0mm	125mm
JFBDG-23C01	25	23	28.8mm	28.5mm	21.7mm	110mm	160mm
JFBDG-29C01	32	29	34.7mm	34.3mm	27.4mm	140mm	200mm
JFBDG-36C01	40	32	42.7mm	42.3mm	35.8mm	200mm	260mm
JFBDG-48C01	50	48	54.6mm	54.2mm	46.7mm	230mm	300mm

Part number JFBDG-17C01.50

Temperature Range
Continuous application temperature: -20ºC to 95ºC
Short-term: up to +120ºC

Degree of Mechanical Protection
Corrosion free
High flexibility
High strength
High chemical resistance

Material
Conduit: High-grade, specially formulated Polyamide 12
Overextrusion: FDA 21 CFR / EU 10/2011 compliant polyamide elastomer

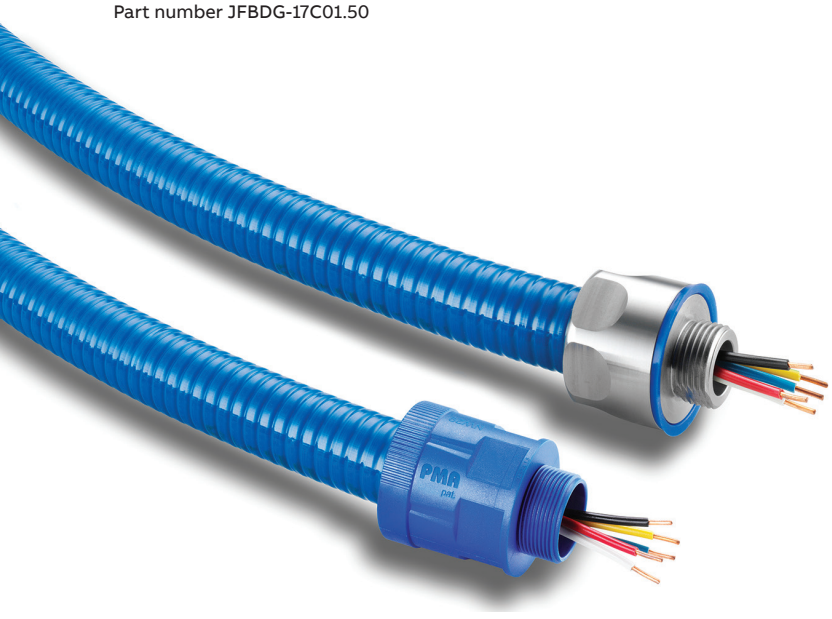

PMA cable protection solutions from ABB: Best protection, flexibility and cleanability for food and beverage sector.

Type JKNH nylon straight fitting

Made of FDA compliant material.



Features

- Very high impact resistance - easy push-in assembly
- Corrosion-free
- Excellent conduit pull-out strength
- IP69 system protection for indoor splash zone areas

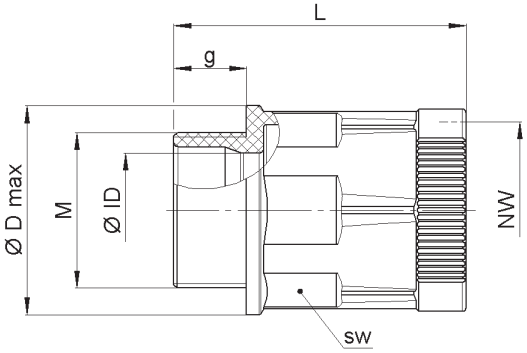

Approvals
CE LOW VOLTAGE DIRECTIVE · c UL us · NSF COMPONENT · ECOLAB

IP Rating	Appropriate Fitting
For use with: Type JFBD conduit	
IP68	Yes
IP69	Yes

METRIC Part no:	Thread Size		Dimensions					Weight kg
	Metric (mm)	NW	g	øID	øID max	L	SW	100 pcs
JKNH-M162	M16 x 1.5	12	11.0mm	11.0mm	28.5mm	47.5mm	25mm	0.8
JKNH-M202	M20 x 1.5	12	12.5mm	11.0mm	28.5mm	47.5mm	25mm	0.9
JKNH-M207	M20 x 1.5	17	14.5mm	11.0mm	35.0mm	53.5mm	32mm	1.4
JKNH-M257	M25 x 1.5	17	16.5mm	12.0mm	35.0mm	54.5mm	32mm	1.5
JKNH-M253	M25 x 1.5	23	19.0mm	12.0mm	42.0mm	57.0mm	38mm	1.7
JKNH-M323	M32 x 1.5	23	23.0mm	15.0mm	43.0mm	60.5mm	38mm	2.0
JKNH-M329	M32 x 1.5	29	26.0mm	15.0mm	51.5mm	65.5mm	46mm	3.2
JKNH-M409	M40 x 1.5	29	29.0mm	19.0mm	51.5mm	69.5mm	46mm	3.7
JKNH-M406	M40 x 1.5	36	32.0mm	19.0mm	65.0mm	75.0mm	60mm	5.9
JKNH-M506	M50 x 1.5	36	37.5mm	19.0mm	65.0mm	75.0mm	60mm	6.2
JKNH-M508	M50 x 1.5	48	42.0mm	19.0mm	75.0mm	81.0mm	70mm	7.5
JKNH-M638	M63 x 1.5	48	48.5mm	19.0mm	75.0mm	81.0mm	70mm	7.8

Degree of Mechanical Protection
Corrosion free
High chemical resistance
Very high fatigue life

Material
FDA 21 CFR / EU 10/2011 compliant Polyamide 6

Conformity
Low voltage directive
NSF 14159-1
NSF 169
UR File number E80294

Type JKBH fitting, 90° curved elbow

Made of FDA compliant material.



Features

- Easy push-in assembly for maximum installation reliability
- Corrosion-free
- Excellent conduit pull-out strength
- IP 69 system protection for indoor splash zone areas

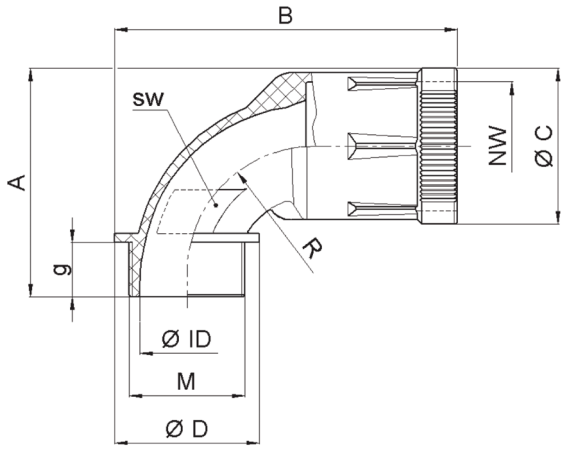

Approvals
CE NSF cULus ECOLAB

Temperature Range
Application temperature: -50ºC to +105ºC

IP Rating	Appropriate Fitting
For use with: Type JFBD conduit	
IP66	Yes
IP68	Yes
IP69	Yes

Degree of Mechanical Protection
Very high corrosion resistance
Very high chemical resistance
Very high fatigue life

Material
FDA 21 CFR / EU 10/2011 compliant Polyamide 6

Part Numbers and Dimensions

METRIC Part no:	Thread size		Dimensions (mm)								Weight kg
	Metric (mm)	NW	ØID	g	A	B	ØC	ØD	R	SW	100 pcs
JKBH-M162	M16 x 1.5	12	8.0	11.0	44.5	72.0	28.5	24.0	28.0	15	1.5
JKBH-M202	M20 x 1.5	12	11.8	11.0	44.5	74.0	28.5	28.0	28.0	15	1.3
JKBH-M207	M20 x 1.5	17	11.5	11.0	50.0	81.0	35.0	29.0	29.5	20	2.5
JKBH-M257	M25 x 1.5	17	16.5	12.0	51.0	84.0	35.0	35.0	29.5	20	2.2
JKBH-M253	M25 x 1.5	23	16.0	12.0	59.5	92.0	43.0	35.0	35.0	26	3.9
JKBH-M323	M32 x 1.5	23	22.5	15.0	63.0	94.5	43.0	40.0	35.0	26	3.2
JKBH-M329	M32 x 1.5	29	23.0	15.0	73.0	108.0	51.5	43.0	41.5	33	6.8
JKBH-M409	M40 x 1.5	29	28.5	19.0	77.0	112.0	51.5	51.0	41.5	33	6.0
JKBH-M406	M40 x 1.5	36	29.5	19.0	87.5	126.0	60.5	55.0	49.0	41	11.0
JKBH-M506	M50 x 1.5	36	37.0	19.0	87.5	128.0	60.5	59.0	49.0	41	9.0
JKBH-M508	M50 x 1.5	48	38.5	19.0	100.5	145.5	73.0	69.0	55.5	46	18.0
JKBH-M638	M63 x 1.5	48	48.0	19.0	100.5	148.5	73.0	75.0	55.5	55	14.0

Conformity
Low voltage directive
NSF 14159-1
NSF 169
UR File number E80294

Type JENQ-316L Stainless Steel liquid tight fitting

Single piece, liquid tight high temperature Stainless Steel fitting suitable for clean and hygienic environment.

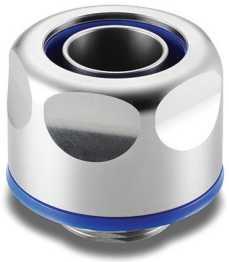

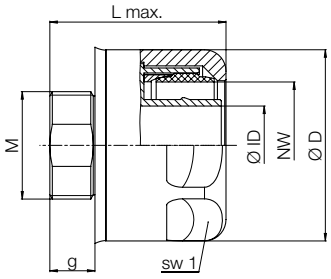

Features

- Unique single piece design
- Stainless Steel 316L material
- Seals made from FDA compliant material
- IP69 system protection
- For indoor food zone - non contact

METRIC Part no:	Thread Size	Dimensions						Weight kg
	Metric (mm)	NW	g	øID	øD	L max.	SW	100 pcs
JENQ-M162-10	M16 x 1.5	12	10.0mm	9.2mm	31.9mm	35.9mm	30.0mm	11.6
JENQ-M207-10	M20 x 1.5	17	10.0mm	13.0mm	35.0mm	36.9mm	32.0mm	13.0
JENQ-M253-11	M25 x 1.5	23	11.0mm	18.3mm	44.5mm	41.6mm	40.0mm	23.6
JENQ-M329-13	M32 x 1.5	29	13.0mm	24.0mm	55.5mm	48.7mm	50mm	41.8
JENQ-M406-13	M40 x 1.5	36	13.0mm	32.4mm	61.5mm	51.2mm	57.0mm	49.8
JENQ-M508-14	M50 x 1.5	48	14.0mm	42.3mm	78.0mm	57.4mm	74mm	88.1

Approvals

IP Rating	Appropriate Fitting
For use with: Type JFBD conduit	
IP68	Yes
IP69	Yes

Degree of Mechanical Protection
Very high corrosion resistance
Very high chemical resistance
Very high fatigue life

Material
FDA 21 CFR / EU 10/2011 compliant high-performance polyester elastomer
316L Stainless steel

Conformity
Low voltage directive
NSF 14159-1
NSF 169
UR File number E80294

Type JSGB 316 Stainless Steel P-clip

316 Stainless steel clip, for use with JFBD conduit.
Suitable for a clean and hygienic environment.

METRIC Part no:	Dimensions						Weight kg
	NW	A	B	C	H	ø d1	100 pcs
JSGB-12	12	34mm	15mm	17.5mm	12mm	16.0mm	0.55
JSGB-17	17	40mm	15mm	20.5mm	23mm	21.6mm	0.67
JSGB-23	23	46mm	15mm	24.0mm	30mm	28.8mm	0.85
JSGB-29	29	50mm	15mm	27.0mm	31mm	34.7mm	0.98
JSGB-36	36	59mm	15mm	31.0mm	45mm	42.7mm	1.16
JSGB-48	48	71mm	15mm	37.0mm	56mm	54.6mm	1.44



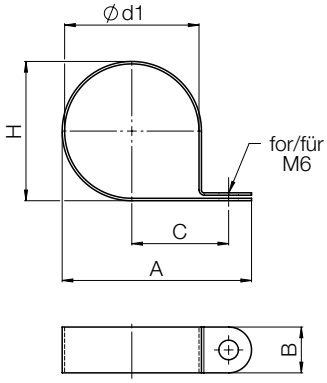



Stainless Steel lock nut

Suitable for clean and hygienic environment in the food and beverage industry.

METRIC Part no:	Thread Size		Dimensions		Weight kg	Packing Unit
	Metric (mm)	SW	e	h	100 pcs	VE/Stk
GME-M16	M16 x 1.5	19	21mm	3.0mm	0.267	10
GME-M20	M20 x 1.5	24	26.5mm	3.5mm	0.527	10
GME-M25	M25 x 1.5	30	33mm	4.0mm	0.907	10
GME-M32	M32 x 1.5	36	39.5mm	5.0mm	1.269	10
GME-M40	M40 x 1.5	46	51mm	5.0mm	2.253	10
GME-M50	M50 x 1.5	60	66mm	5.0mm	4.465	10

Cable protection solutions for the food and beverage industry:

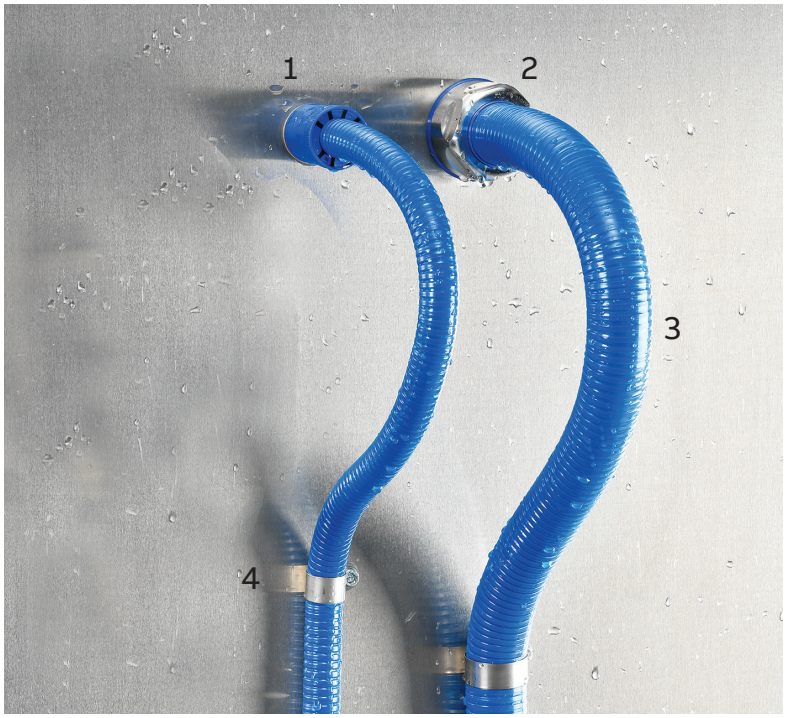

1. IP69 rated system
2. Efficient, easy and space-saving assembly
3. Outstanding flexibility combined with smooth easy-to-clean outer layer conduits
4. Stainless steel P-Clip provides reliable fixation

ABB solutions for the food and beverage industry

To deliver continuous operation and sustainability

PMA cable protection from ABB is just part of an extensive portfolio of technologies for the food and beverage sector, drawing on more than 130 years of experience and the expertise of some 135,000 individuals worldwide.

Our focus is on providing solutions that address critical operational issues, allowing you to focus on plant sustainability, cost, quality, flexibility, safety and regulatory challenges.

We harness the capabilities of state-of-the-art materials and technologies to deliver continuous operation and sustainability - reducing the risk of production downtime and its associated effects.

A pioneering technology leader, ABB truly understands the challenges faced by the modern food and beverage processing sector. ABB is focused on providing solutions that address the critical issues in every area of operations, allowing customers to focus on plant sustainability, cost, quality, flexibility, safety and regulatory challenges. ABB's range of electrical solutions matches specific application criteria from the start to finish of food processing operations, guaranteeing the quality and reliability of electrical systems throughout the facility, from incoming raw materials through to the shipping of goods.

With the industry's most efficient distribution system, ABB is ideally prepared to meet ongoing MRO, OEM and construction needs – now and for years to come.

For more information please visit: http://new.abb.com/low-voltage/industries/food-beverage

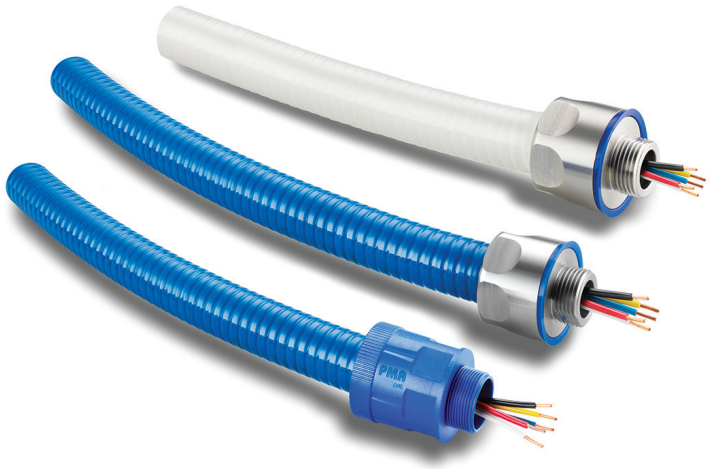



Further information

Visit our website

Visit the PMA Food & Beverage web pages on ABB.com for our most up-to-date product lineup, and much more. This is the place to go to find all of the planning documents you need at your fingertips, including:

- **Technical data sheets**
- **Cleaning and Chemical Properties Information**
- **CAD files**
- **Videos**
- **Related products**



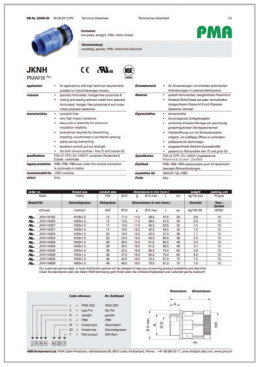

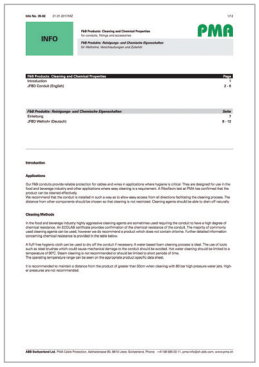

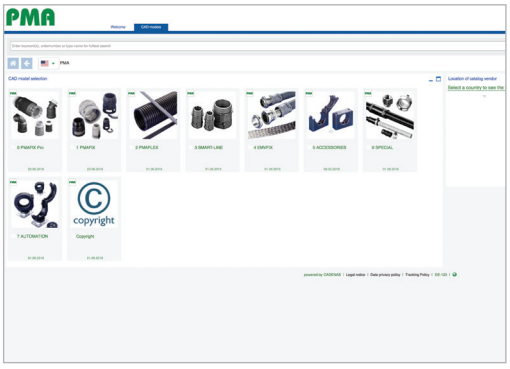

Additional information
We reserve the right to make technical changes or modify the contents of this document without prior notice. With regard to purchase orders, the agreed particulars shall prevail. ABB AG does not accept any responsibility whatsoever for potential errors or possible lack of information in this document.

We reserve all rights in this document and in the subject matter and illustrations contained therein. Any reproduction, disclosure to third parties or utilization of its contents – in whole or in parts – is forbidden without prior written consent of ABB AG.

The PMA® cable protection solution offers unrivalled resistance to the corrosive effects of cleaning agents and chemicals, in tandem with excellent mechanical properties, outstanding flexibility with the ability to withstand tight bending radii, and efficient, space - and time-saving fitting and assembly.

ABB Switzerland Ltd.
PMA Cable Protection
Aathalstrasse 90 | CH-8610 Uster



Note: We reserve the right to make technical changes or modify the contents of this document without prior notice. With regard to purchase orders, the agreed particulars shall prevail. ABB does not accept any responsibility whatsoever for potential errors or possible lack of information in this document.

We reserve all rights in this document and in the subject matter and illustrations contained therein. Any reproduction, disclosure to third parties or utilization of its contents – in whole or in parts – is forbidden without prior written consent of ABB.

© Copyright 2017 ABB. All rights reserved.
Specifications subject to change without notice.

(02/2019) © Copyright PMA ABB-KAT.31E / 7TCA292000R7572