

HARTING Industrial Connectors Han®

Industrial Connectors – Overview of the series

Contents	Chapter
Industrial Connectors | Technical characteristics	**00**
Han A® | Slim Construction Size (up to 16 amperes)	**01**
Han D® / DD® | up to 216 contacts	**02**
Han E® / Han® ES/ESS/EE/EEE | for 16 amperes	**03**
Han Hv E® / Han® Hv ES | for higher voltages	**04**
Han-Com® | Combination Connectors	**05**
Han-Modular® | modular connectors	**06**
Han® HsB | for higher currents	**07**
Han® AV | Terminal Block Connectors	**08**
Staf® | for low voltages	**09**
Han-Snap® | for the use in switch cabinets	**11**
Han-Port® | Interface for power and signals	**12**
Han® Q | compact connectors	**13**
Han® HC-Modular | High Current Connectors	**14**
Han-Power® | Energy Bus Components	**15**
Han® HMC | for High Mating Cycles	**16**
Han® High Temp | for high temperatures	**17**
Han-Brid® | Industrial Bus Interface	**19**
Han® PCB termination	**20**
Han-*Yellock*®	**25**
Han-Eco®	**29**
Han® Hoods and Housings | with metric thread	**31**
Han® Thermocouple	**41**
Han® GND	**42**
Accessories	**80**
Tools	**90**

Economic and Reliable Connections

Specifications

DIN EN 60 664-1 (VDE 0110-1)
Principles,
requirements and tests

DIN EN 61 984 (VDE 0627)
Connectors,
Safety requirements and tests

Note:

The connectors included in this catalogue should not be coupled or decoupled under electrical load unless otherwise stated.

The connector must not be powered-up in the un-mated condition. This is also true if the connector is closed with a protection cover, unless otherwise stated.

The provision of protection against electric shock is the responsibility of the user. Protection can be achieved by the use of HARTING hoods and housings coupled with/or alternatively appropriate installation methods provided by the user.

The female connector in a HARTING hood or housing offers finger safe protection according to relevant standards for the mating face, even in the unmated condition, unless otherwise stated.

Connectors of the same or different series being mounted side by side may be protected against incorrect mating by the use of coding options.

Standard

DIN EN 175 301-801

Approvals

UL File No. E 23 50 76 (www.ul.com)

CSA File No. LR 18 753, SEV
for inserts

GL certificate No. 13 674 - 99 HH

Certified according to EN ISO 9001
in design/development, production,
installation and servicing

Terminations

- Screw terminal
- Crimp terminal
- Cage-clamp terminal
- Wrap terminal
- Solder terminal
- Axial-screw terminal
- Rapid terminal
- IDC termination

Inserts

- Leading protective ground
- Polarised for correct mating
- Interchangeability of male and female inserts in hoods and housings
- Captive fixing screws
- Can be used with hoods and housings, or for rack and panel applications

Hoods/Housings

- Standard Hoods/Housings
- Hoods/Housings for harsh environmental requirements
- Hoods/Housings for intrinsically safe plant
- Degree of protection IP 65
- Electrical connection with protective ground
- High mechanical strength and vibration-resistance ensured by locking levers
- Spring-loaded covers in shockproof thermoplastic or metal covers, both lockable

Accessories

- Extensive range of cable protection and sealing accessories
- Protective covers available
- Coding options for incorrect mating protection

For "non standard applications" we can manufacture designs to match your
requirements.
Please discuss requirements with us.

HARTING components help you to construct top quality products – economically and in line with market requirements.

General information

It is the customer's responsibility to check whether the components illustrated in this catalogue also comply with different regulations from those stated in special fields of applications.

We reserve the right to modify designs or substance of content in order to improve quality, keep pace with technological advancement or meet particular requirements in production.

No part of this catalogue may be reproduced in any form (print, photocopy, microfilm or any other process) or processed, duplicated or distributed by means of electronic systems without the prior written consent of HARTING Electric GmbH & Co. KG, Espelkamp. We are bound by the German version only.

© HARTING Electric GmbH & Co. KG, Espelkamp – All rights reserved, including those of the translation.

Transforming customer wishes into concrete solutions



The HARTING Technology Group is skilled in the fields of electrical, electronic and optical connection, transmission and networking technology, as well as in manufacturing, mechatronics and software creation. The Group uses these skills to develop customized solutions and products such as connectors for energy and data-transmission/data-networking applications, including, for example, mechanical engineering, rail technology, wind energy plants, factory automation and the telecommunications sector. In addition, HARTING also produces electro-magnetic components for the automobile industry and offers solutions in the field of housing technology and shop systems.

The HARTING Group currently comprises 57 sales companies and production plants worldwide employing a total of more than 4,600 staff.

HARTING Subsidiary HARTING Representation



We aspire to top performance.

Connectors ensure functionality. As core elements of electrical and optical termination, connection and infrastructure technologies, they are essential in enabling the modular construction of devices, machines and systems across an extremely wide range of industrial applications. Their reliability is a crucial factor guaranteeing smooth functioning in the manufacturing area, telecommunications, applications in medical technology – in short, connectors are at work in virtually every conceivable application area. Thanks to the ongoing development of our technologies, our customers enjoy investment security and benefit from durable, long-term functionality.

Wherever our customers are, we're there.

Increasing industrialization is creating growing markets that are characterized by widely diverging demands and requirements. What these markets all share in common is the quest for perfection, increasingly efficient processes and reliable technologies. **HARTING** is providing these technologies – in Europe, the Americas and Asia. In order to implement customer requirements in the best possible manner, the **HARTING** professionals at our international subsidiaries engage in up-close, partnership-based interaction with our customers, right from the very early product development phase.

Our on-site staff form the interface to the centrally coordinated development and production departments. In this way, our customers can rely on consistently high, superior product quality – worldwide.

Our claim: Pushing Performance.

HARTING provides more than optimally attuned components. In order to offer our customers the best possible solutions, on request **HARTING** contributes a great deal more and is tightly integrated into the value-creation process.
From ready-assembled cables through to control racks or ready-to-go control desks. Our aim is to generate maximum benefit for our customers – with no compromises!

Quality creates reliability – and warrants trust.

The **HARTING** brand stands for superior quality and reliability – worldwide. The standards we set are the result of consistent, stringent quality management that is subject to regular certifications and audits.
EN ISO 9001, the EU Eco-Audit and ISO 14001:2004 are key elements here. We take a proactive stance towards new requirements, which is why **HARTING** is the first company worldwide to have obtained the new IRIS quality certificate for rail vehicles.



HARTING technology creates added value for customers.

Technologies by **HARTING** are at work worldwide. **HARTING's** presence stands for smoothly functioning systems powered by intelligent connectors, smart infrastructure solutions and sophisticated network systems. Over the course of many years of close, trust-based cooperation with its customers, the **HARTING** Technology Group has become one of the leading specialists globally for connector technology. We offer individual customers specific and innovative solutions that go beyond the basic standard functionalities. These tailored solutions deliver sustained results, ensure investment security and enable customers to achieve significant added value.

Opting for HARTING opens up an innovative, complex world of concepts and ideas.

In order to develop and produce connectivity and network solutions serving an exceptionally wide range of connector applications in a professional and cost-effective manner, **HARTING** not only commands the full array of conventional tools and basic technologies. Above and beyond these capabilities, **HARTING** is constantly harnessing and refining its broad base of knowledge and experience to create new solutions that also ensure continuity. To secure its lead in know-how, HARTING draws on a wealth of sources from its in-house research and applications.

Salient examples of these sources of innovative knowledge include microstructure technologies, 3D design and connection technology, high-temperature and ultrahigh-frequency applications that are finding use in telecommunications and automation networks, in the automotive industry, or in industrial sensor and actuator applications, RFID and wireless technologies, in addition to packaging and housing made of plastics, aluminum and stainless steel.

HARTING overcomes technological limitations.

Drawing on the comprehensive resources of the group's technology pool, **HARTING** devises practical solutions for its customers. Whether this involves industrial networks for manufacturing automation, or hybrid interface solutions for wireless telecommunication infrastructures, 3D circuit carriers with microstructures, or cable assemblies for high-temperature applications in the automotive industry – **HARTING** technologies offer not only components, but comprehensive solutions attuned to individual customer requirements and preferences. The range of cost-effective solutions covers ready-to-use cable configurations, completely assembled backplanes and board system carriers, as well as fully wired and tested control panels.

In order to ensure the future-proof design of RF and EMC-compatible interface solutions, the central **HARTING** laboratory (certified to EN 45001) employs simulation tools, as well as experimental, testing and diagnostics facilities all the way to scanning electron microscopes. In addition to product and process suitability considerations, lifecycle and environmental aspects play a key role in the selection of materials and processes.

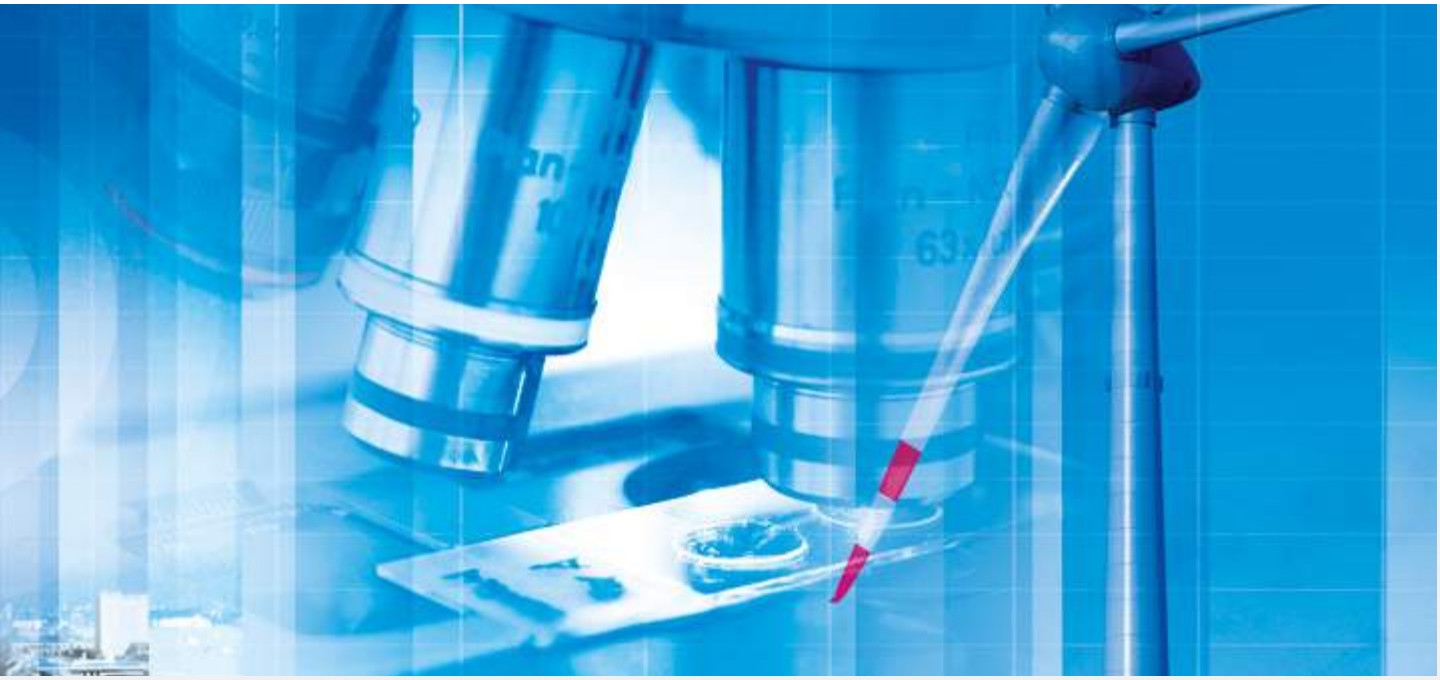

HARTING's knowledge is practical know-how that generates synergy effects.

HARTING commands decades of experience with regard to the applications conditions involved in connections in telecommunications, computer, network and medical technologies, as well as industrial automation technologies, e.g. in the mechanical engineering and plant engineering areas, in addition to the power generation industry and the transportation sector. **HARTING** is highly conversant with the specific application areas in all of these technology fields. In every solution approach, the key focus is on the application. In this context, uncompromising, superior quality is our hallmark. Every new solution found invariably flows back into the **HARTING** technology pool, thereby enriching our resources. And every new solution we go on to create will draw on this wealth of resources in order to optimize each and every individual solution. **HARTING** is synergy in action.

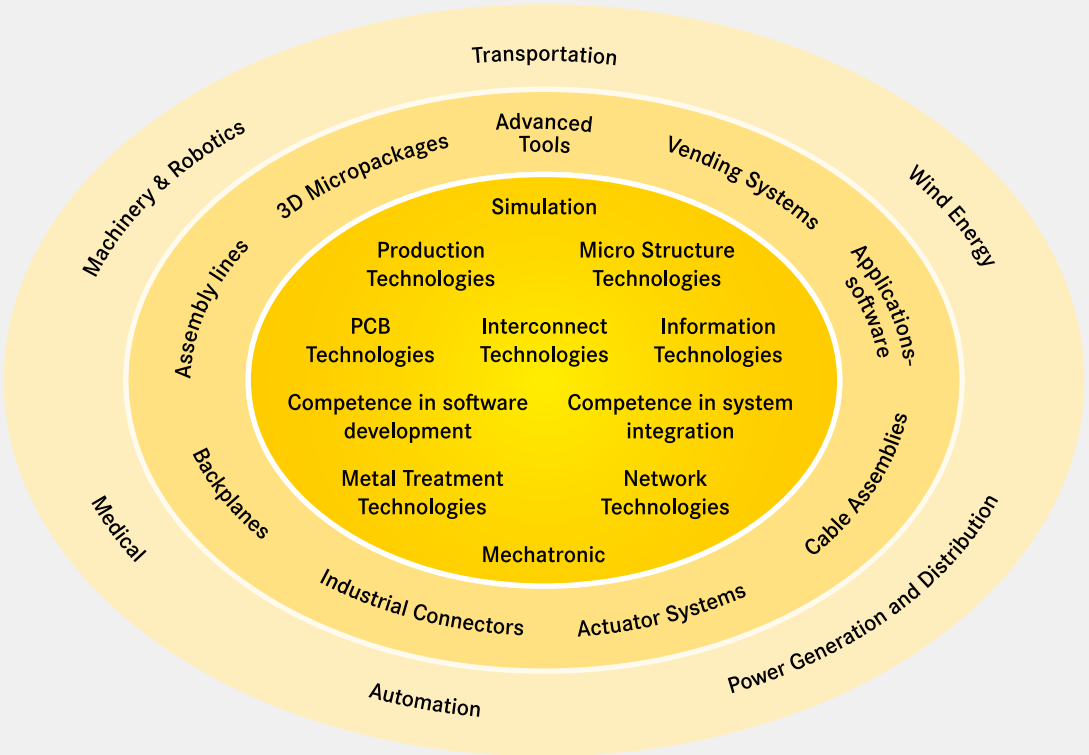

Contents	Page
Summary Han®-sizes	**00.2**
How to order connectors	**00.4**
Hoods/Housings connector insert protection	**00.5**
Types of hood/housing	**00.6**
Locking systems	**00.8**
Connection technology	**00.9**
Electrical engineering data	**00.18**
Current carrying capacity	**00.21**
Metric cable thread	**00.23**
Declaration of Conformity	**00.24**

Summary Han®-sizes

Size	Description
A	Hood side-entry 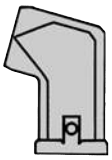 Hood top-entry 
3	230/400 V 10 A Han® 3 A / 4 A chapter 01  3 / 4 + ⏚ 50 V 10 A Staf 6 chapter 09  6 250 V 10 A Han® 7 D chapter 02 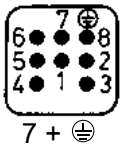 7 + ⏚ 50 V 10 A Han® 8 D chapter 02  8 230/400 V 16 A Han® Q 5/0 chapter 13 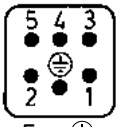 5 + ⏚ 400 V 10 A Han® Q 7/0 chapter 13 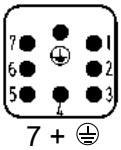 7 + ⏚ 50 V 10 A Han-Brid® chapter 19 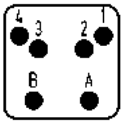 4 + 2 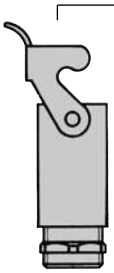 Housing screw mounting 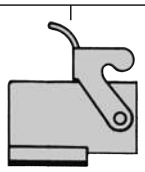 Housing bulkhead mounting 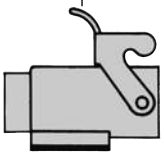 Housing surface mounting 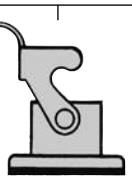 Housing bulkhead mounting 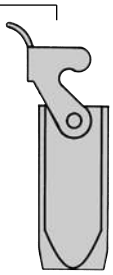 Hood cable to cable coupling
10 16	Hood top-entry 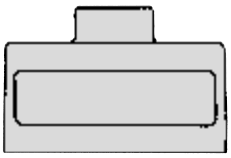 Hood side-entry 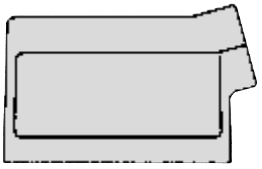 250 V 16 A Han A® chapter 01 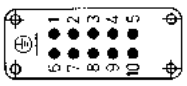 10 + ⏚ 250 V 10 A Han D® chapter 02 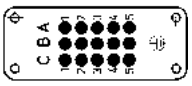 15 + ⏚ 50 V 10 A Staf® chapter 09 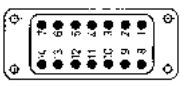 14 50 V – 1000 V 5 A – 70 A Han-Modular® chapter 06 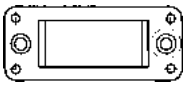 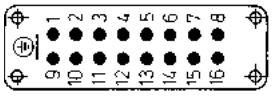 16 + ⏚ 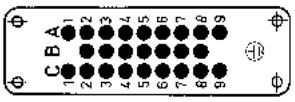 25 + ⏚ 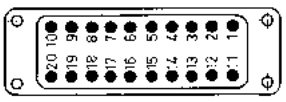 20 1 module Housing bulkhead mounting  Housing surface mounting  Hood cable to cable coupling 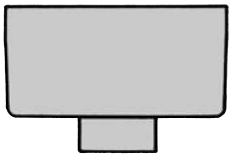
32	suitable for 2 inserts of size 16 A

Summary Han®-sizes

Size	Description
B	Hood side-entry 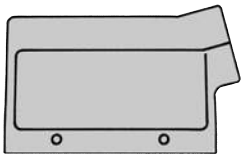 Hood top-entry 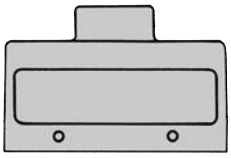
	250 V 10 A Han D® chapter 02 · 250 V 10 A Han DD® chapter 02 · 500 V 16 A Han E® Han® ES chapter 03 · 500 V 16 A Han® EE Han® EEE chapter 03 · 400/690 V 35 A Han® HsB chapter 07 · 830 V 16 A Han Hv E® Han® Hv ES chapter 04 · 160 V – 690 V 10 A – 100 A Han-Com® chapter 05 · 50 V – 5000 V 5 A – 200 A Han-Modular® chapter 06
6	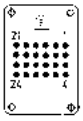 24 + ⏚ · 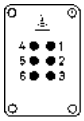 6 + ⏚ · 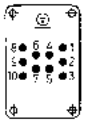 10 + ⏚ · 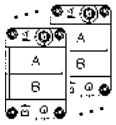 2 modules
10	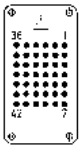 42 + ⏚ · 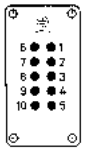 10 + ⏚ · 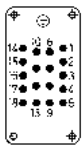 18 + ⏚ · 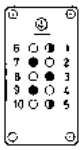 3 + ⏚ · 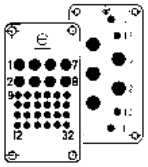 4/4 + ⏚ 8/24 + ⏚ · 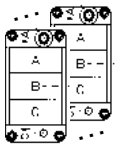 3 modules
16	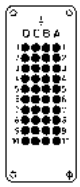 40 + ⏚ · 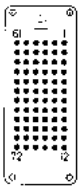 72 + ⏚ · 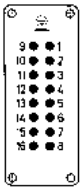 16 + ⏚ · 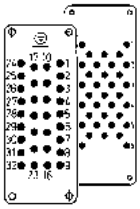 40 + ⏚ 32 + ⏚ · 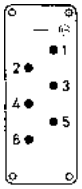 6 + ⏚ · 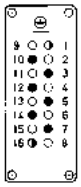 6 + ⏚ · 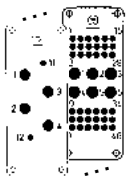 6/36 + ⏚ 4/2 + ⏚ · 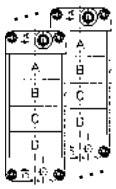 4 modules
24	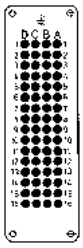 64 + ⏚ · 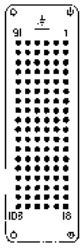 108 + ⏚ · 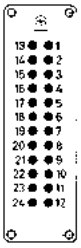 24 + ⏚ · 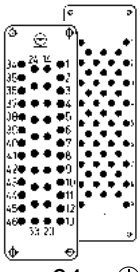 64 + ⏚ 46 + ⏚ · 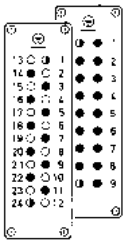 16 + ⏚ 10 + ⏚ · 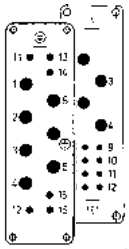 4/8 + ⏚ 6/6 + ⏚ · 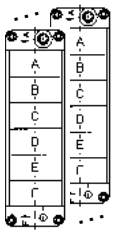 6 modules
	Housing surface mounting 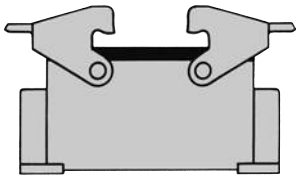 · Housing bulkhead mounting 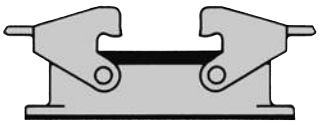 · Hood cable to cable coupling 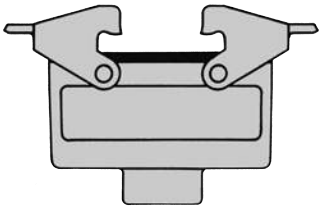
32	suitable for 2 inserts of size 16 B
48	suitable for 2 inserts of size 24 B

How to order connectors

For a complete connector components may be ordered from the following sub headings

Cable entry protection

Universal cable glands

Special cable clamp with strain relief, bell mouthed cable fitting and anti-twist devices

Cable gland with normal or multiple seal

Extensive range of accessories

Hoods

low or high construction
top or side cable entry
1 or 2 locking levers

Male insert with

screw terminal or
crimp terminal (order contacts separately)
or cage-clamp terminal

Female insert with

screw terminal or
crimp terminal (order contacts separately)
or cage-clamp terminal

Housings

Housing (bulkhead mounting)
with or without thermoplastic
or metal covers
1 or 2 locking levers

Housing (surface mounting)
low or high construction
with or without thermoplastic
or metal covers
1 or 2 locking levers
1 or 2 cable entries

Hood (cable to cable)
low or high construction
for cable to cable connections

Accessories

Protective covers available

Code and guide pins for coding

Special insert fixing screws for use without hoods and housings

Label according to CSA-approval

Suitable hoods and housings will be found on the same page.

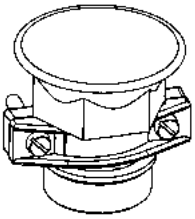

Cable clamp

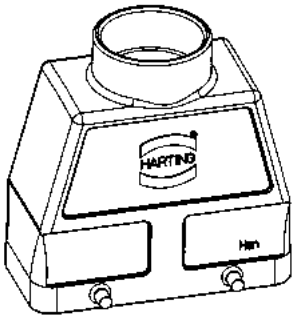

Hood



Male contacts

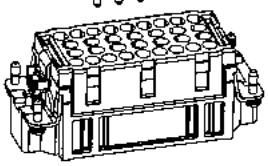

Male insert

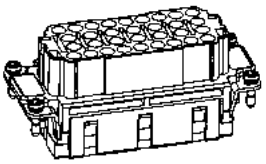

Female insert

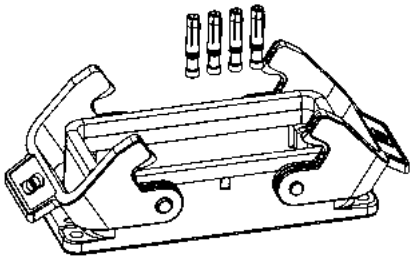

Female contacts

Housing

Part number explanation

Our computerized ordering system uses the following code:

09	33	024	2601

Product-group (connectors)

Series (i. e. Han E®)

Number of contacts (i. e. 6, 10, 16, 24)

Part of connector assembly (hoods/housings, inserts)

Hoods/Housings connector insert protection

The connector's housing, sealing and locking mechanism protect the connection from external influences such as mechanical shocks, foreign bodies, humidity, dust, water or other fluids such as cleansing and cooling agents, oils, etc. The degree of protection the housing offers is explained in the IEC 60 529, DIN EN 60 529, standards that categorize enclosures according to foreign body and water protection.

The following table shows the different degrees of protection.

Code letters (International Protection)	First Index Figure (Foreign bodies protection)	Second Index Figure (Water protection)
IP	6	5

Index figure	Degree of protection			Index figure	Degree of protection		
0	No protection		No protection against accidental contact, no protection against solid foreign bodies	0	No protection against water		No protection against water
1	Protection against large foreign bodies		Protection against contact with any large area by hand and against large solid foreign bodies with Ø > 50 mm	1	Drip-proof		Protection against vertical water drips
2	Protection against medium sized foreign bodies	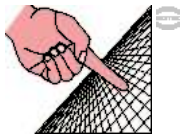	Protection against contact with the fingers, protection against solid foreign bodies with Ø > 12 mm	2	Drip-proof		Protection against water drips (up to a 15° angle)
3	Protection against small solid foreign bodies	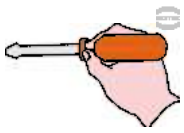	Protection against tools, wires or similar objects with Ø > 2.5 mm, protection against small foreign solid bodies with Ø > 2.5 mm	3	Spray-proof		Protection against diagonal water drips (up to a 60° angle)
4	Protection against grain-shaped foreign bodies	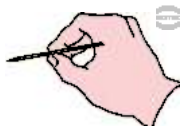	As 3 however Ø > 1 mm	4	Splash-proof		Protection against splashed water from all directions
5	Protection against injurious deposits of dust	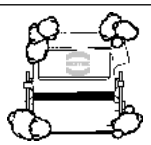	Full protection against contact. Protection against interior injurious dust deposits	5	Hose-proof		Protection against water (out of a nozzle) from all directions
6	Protection against ingress of dust		Total protection against contact. Protection against penetration of dust	6	Strong hose-proof		Protection against strong water (out of a nozzle) from all directions
				7	Protected against immersion	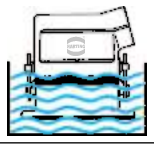	Protected against temporary immersion
				8	Water-tight	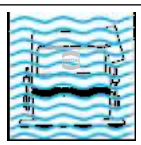	Protected against water pressure
				9K *	Protected against high-pressure		Protected against water from high-pressure / steam jet cleaners

Description according to IEC 60529
* ... IPX9K acc. to ISO 20653

Types of hood/housing

Standard hoods/housings for industrial connectors

Field of application	For excellent mechanical and electrical protection in demanding environments, for example, in the automobile and mechanical engineering industries also for process and regulation control applications
Distinguishing feature	Hoods/housings colour-coded grey (RAL 7037)
Material of hoods/housings	Die-cast light alloy
Locking levers	Han-Easy Lock®
Cable entry protection	Optional special cable clamp for hoods with strain relief, bell mouthed cable fitting and anti-twist devices



Han® M hoods/housings for more demanding environmental requirements

Field of application	For all applications where aggressive environmental conditions and extreme climatic atmospheres are encountered
Distinguishing feature	Hoods/housings colour-coded black (RAL 9005)
Material of hoods/housings	Die-cast light alloy, corrosion resistant
Locking levers	Corrosion resistant stainless steel
Cable entry protection	Special cable clamp for hoods with strain relief, bell mouthed cable fitting and anti-twist devices



Han® EMC hoods/housings for higher EMC requirements

Field of application	For sensitive interconnections that have to be shielded against electrical, magnetic or electro-magnetic interferences
Distinguishing feature	Electrically conductive surface, internal seal
Material of hoods/housings	Die-cast light alloy
Locking levers	Han-Easy Lock®
Cable entry protection	EMC cable clamp in order to connect the cable shielding to the hood without interruption of the shielding



Han® HPR hoods/housings for harsh outdoor environments

Field of application	For external electrical interconnections in vehicles, in highly demanding environments and wet areas, as well as for sensitive interconnections that have to be shielded
Distinguishing feature	Hoods/housings colour-coded black, internal seal (RAL 9005)
Locking parts	Stainless steel
Material of hoods/housings	Die-cast light alloy, corrosion resistant
Cable entry protection	Optional universal cable clamp for hoods with strain relief, or special cable clamp with bell mouthed cable fitting and anti-twist devices (use of adapter is necessary)



Han-INOX® hoods/housings for harsh environments

Field of application	For excellent mechanical and electrical protection in demanding environments, for example, in the food, automobile and mechanical engineering industries also for process and regulation control applications
Distinguishing feature	Matt-finished metal surface
Material of hoods/housings	Stainless steel
Locking levers	Stainless steel
Cable entry protection	Standard cable gland (stainless steel)



Types of hood/housing

Han-Eco® – Lightweight hood/housing made of high-performance plastic

Field of application	Industrial environments, outdoor applications
Distinguishing feature	Black plastic hoods / housings
Material of hoods/housings	Polyamide (glass-fibre reinforced)
Locking levers	Double locking lever / single locking lever (10 A / 16 A) (polyamide, glass-fibre reinforced)
Cable entry protection	Integrated plastic cable gland (optional) for sizes 6 B, 10 B, 16 B, 24 B / 10 A, 16 A



Han-*Yellock*® – Compact hood/housing in a shapely design

Field of application	Industrial environments (e.g. in robotics, machinery)
Distinguishing feature	Internal locking mechanism, push-buttons, two-part hood
Material of hoods/housings	Zinc die-cast, aluminum
Locking parts	Stainless steel and polyamide
Cable entry protection	Standard cable gland (with metric threads M20 / M25 / M32 / M40) for hoods with strain relief or special cable glands



Recommended tightening torque for housings, bulkhead mounting

Series	Number of screws	Size of screws	Recommended Tightening torque (Nm)	Remarks
Han® 3 A	2	M 3	0.8 ... 1.0	Gasket
Han® 10 A / 16 A	4	M 3	0.8 ... 1.0	Gasket
Han® 10 EMV / 16 EMV	4	M 3	min. 1.0	O-ring
Han® 32 A	4	M 4	0.8 ... 1.0	Gasket
Han® 6 B / 10 B / 16 B / 24 B	4	M 4	0.8 ... 1.0	Gasket
Han® 32 B	4	M 5	min. 2.5	O-ring
Han® 48 B	4	M 6	min. 3.0	O-ring
Han® 3 HPR	2	M 4	min. 1.0	O-ring
Han® 6 / 10 / 16 / 24 HPR	4	M 6	min. 3.0	O-ring
Han® 48 HPR	4	M 8	min. 5.0	O-ring

To offer safe protection the surface condition for mounting panel should be according to DIN 4766:

- Waviness ≤ 0.2 mm on 200 mm distance
- Roughness R_a ≤ 16 µm

General remark for assembling

During assembly and handling of the connector, any kind of damage to the surface of the housing must be avoided to guarantee the correct surface protection.

Housing with 2 levers Han-Easy Lock®

- ❑ easy operation
- ❑ high degree of pressure tightness
- ❑ reliable locking guaranteed by 4 locking points
- ❑ space saving mounting
- ❑ ideal for mounting side by side
- ❑ cable to cable connection is possible
- ❑ high seal force

Details of Han-Easy Lock® see chapter 31



Housing with 1 lever Han-Easy Lock®

- ❑ easily accessible, even with side entry
- ❑ possibility to lock protective covers on the housing
- ❑ cable to cable connection is possible
- ❑ 2 locking points on the longitudinal axis



1 lever in central position

- ❑ easily accessible, even with side entry
- ❑ 2 locking points on the lateral axis
- ❑ space saving mounting
- ❑ ideal for mounting side by side
- ❑ single hand operation



Screw locking / toggle locking

- ❑ hexagon nuts tightened with spanner
- ❑ highest degree of pressure tightness
- ❑ easily accessible, also with side entry
- ❑ use of tools avoids access by unauthorized persons



Hood with 2 levers Han-Easy Lock®

- ❑ easy operation
- ❑ high degree of pressure tightness
- ❑ ideal for mating to housings with protection cover
- ❑ high seal force

Details of Han-Easy Lock® see chapter 31



Crimp connection

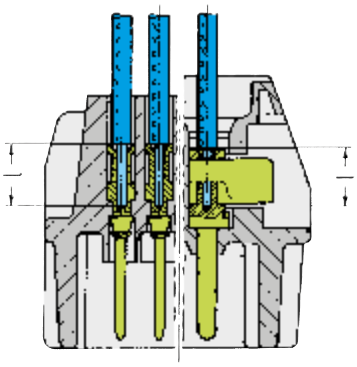

Han DD®
Han D®
R 15
Han-Modular® (10 A)
Han E®
Han A®
Han Hv E®

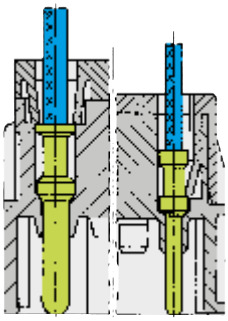

Han-Com® (40 A)
Han-Modular® (40 A)
Han E®
Han A®
Han Hv E®
Han® EE
Han® EEE
Han-Modular® (16 A)
Han® Q

A perfect crimp connection is gastight, therefore corrosion free and amounts to a cold weld of the parts being connected. For this reason, major features in achieving high quality crimp connections are the design of the contact crimping parts and of course the crimping tool itself. Wires to be connected must be carefully matched with the correct size of crimp contacts. If these basic requirements are met, users will be assured of highly reliable connections with low contact resistance and high resistance to corrosive attack.

The economic and technical advantages are:

- Constant contact resistance as a result of precisely repeated crimp connection quality
- Corrosion free connections as a result of cold weld action
- Pre-preparation of cable forms with crimp contacts fitted
- Optimum cost cable connection

Requirements for crimp connectors are laid down in DIN EN 60 352-2 as illustrated in the table.

Pull out force of stranded wire

The main criterion by which to judge the quality of a crimp connection is the retention force achieved by the wire conductor in the terminal section of the contact. DIN EN 60 352-2 defines the extraction force in relation to the cross-section of the conductor. When fitted using HARTING crimping tools and subject to their utilization in an approved manner, our crimp connectors comply with the required extraction forces.

Crimping tools

Crimping tools (hand operated or automatic) are carefully designed to produce with high pressure forming parts a symmetrical connection of the crimping part of the contact and the wire being connected with the minimum increase in size at the connection point. The positioner automatically locates the crimp and wire at the correct point in the tool.

A ratchet in the tool performs 2 functions:

- It prevents insertion of the crimp into the tool for crimping before the jaws are fully open
- It prevents the tool being opened before the crimping action is completed

Identical, perfectly formed, connections can be produced using this crimping system.

Crimp-cross section



HARTING-crimp profile



BUCHANAN crimp profile

Tensile strength of crimped connections
(Table 1 of the DIN EN 60 352-2)

Conductor cross-section		Tensile strength
mm²	AWG	N
0.05	30	6
0.08	28	11
0.12	26	15
0.14		18
0.22	24	28
0.25		32
0.32	22	40
0.5	20	60
0.75		85
0.82	18	90
1.0		108
1.3	16	135
1.5		150
2.1	14	200
2.5		230
3.3	12	275
4.0		310
5.3	10	355
6.0		360
8.4	8	370
10.0		380

Wire gauge		Internal diameter	Stripping length l (mm)		
(mm²)	AWG	Ø (mm)	Han® DD Han® D R15 Han-Modular® (10 A)	Han E® Han A® Han Hv E®	Han® C
0.14 ... 0.37	26 ... 22	0.9	8	-	-
0.5	20	1.15	8	7.5	-
0.75	18	1.3	8	7.5	-
1	18	1.45	8	7.5	-
1.5	16	1.75	8	7.5	9.5
2.5	14	2.25	6	7.5	9.5
4	12	2.85	-	7.5	9.5
6	10	3.5	-	-	9.5
10	8	4.3	-	-	12-18

Screw terminal

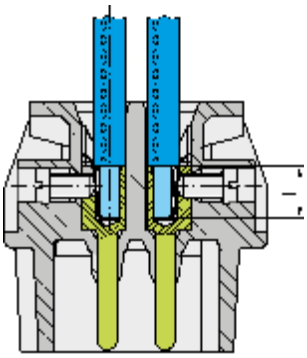

Screw terminals meet VDE 0609 /EN 60 999. Dimensions and tightening torques for testing are shown in following table.
Screw dimensions and tightening torque for screw terminals

Wire gauge (mm²)	1.5	2.5	4	6	10	16
Screw thread	M3	M3	M3.5	M4	M4	M6
Test moment of torque (Nm)	0.5	0.5	0.8	1.2	1.2	1.2*
min. pull-out for stranded wire (N)	40	50	60	80	90	100

* for screws without heads

The relevant regulations state that in the case of

- Terminals with wire protection

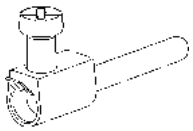

the use of ferrules is not necessary. Series Han E®, Han® HsB, Han Hv E®, Han® K 6/12, Han® K 6/6

- Terminals without wire protection

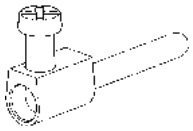

The insulation is first stripped and then a wire ferrule must be used.
Series Han® K 4/x, Han A®, Staf®

Screw terminal

Inserts	Wire protection		min. wire gauge		max. wire gauge*		Stripping length
	Yes	No	mm²	AWG	mm²	AWG	mm
Han® 3 A, Han® 4 A		X	0.75	18	1.5	16	4.5
Han® 10 A, 16 A, 32 A		X	0.75	18	2.5	14	7.5
Han E®, Hv E®	X		0.75	18	2.5	14	7.5
Han® HsB	X		1.5	16	6	10	11.5
Han® K 6/6, K 6/12 (signal contacts)	X		0.2	24	2.5	14	7.5
Han® K 4/2, K 4/8 (signal contacts)		X	0.5	20	2.5	14	7.5
Han® K 4/0, K 4/2, K 4/8 (power contacts)		X	1.5	16	16	6	14
Han E® AV, Han D® AV	X		0.2	24	2.5	14	8 ... 11
Staf®		X	0.5	18	1.5	16	4.5

* Rated wire gauge according to DIN EN 60 999-1

Recommended screw drivers and tightening torques

Screw size	Connector type	Tightening torque (Nm)	Tightening torque (lbft)	Recommended screw driver
M2.5	Cover / cable clamp screws: Han® Megabit, Han® Gigabit, Han® Shielded Module	0.40	0.30	PH 1
M3	Screw terminals: Han® 3 A, Han® 4 A, Han® Q 5/0 (PE), Staf®	0.25	0.20	slotted 0.4 x 2.5
M3	Screw terminals: Han D® AV, Han E® AV, Han® K 6/6, Han® K 6/12 (signal)	0.50	0.40	slotted 0.5 x 3.0
M3	Screw terminals: Han® 10A ... 32A, Han® E, Han Hv E®, Han® HsB	0.50	0.40	slotted 0.6 x 3.5 or PH 1
M3	Screw terminals: Han® E High Temp, Han® Thermocouple	0.50	0.40	slotted 0.6 x 3.5
M3	Cable clamp screws: Han-Quintax®, Han-Quintax® High Density, Han® D Coax, Han® E Coax	0.50	0.40	slotted 0.6 x 3.5
M3	Cable clamp screws: Han® D-Sub, USB Module	0.50	0.40	slotted 0.6 x 3.5 or PH 1
M3	Fixing screws: Connectors sizes 10 A, 16 A	0.50	0.40	slotted 0.6 x 3.5 or PH 1
M3	Fixing screws: Connectors sizes 6 B ... 24 B	0.50	0.40	slotted 0.6 x 3.5 or PH 2
M3	Ground terminals: Han-Modular® Hinged frames 1 ... 2.5 mm²	0.80	0.60	slotted 0.6 x 3.5 or PH 2
M3	Han® guiding pins and bushes	0.50	0.40	slotted 1 x 6.0
M3.5	Ground terminals: Han® 10 A, Han® 16 A, Han 15 D®, Han 25 D®	0.80	0.60	slotted 0.6 x 3.5 or PH 1
M4	Screw terminals: Han® HsB	1.20	0.90	slotted 0.6 x 3.5 or PH 1
M4	Fixing screws: Han-*Yellock*®	1.20	0.90	slotted 0.8 x 4.5 or PH 2
M4	Ground terminals: Han-Modular® Hinged frames 4 ... 10 mm²	1.20	0.90	slotted 0.6 x 3.5 or PH 2
M4	Ground terminals: Han E®, Han® ES, Han® ESS, Han® ES Press, Han Hv E®, Han® Hv ES, Han E® High Temp, Han 40 D®, Han 64 D®, Han DD®, Han® K 8/24, Han® K 4/X, Han® K 6/12, Han® K 6/36	1.20	0.90	slotted 0.8 x 4.5 or PH 2
M5	Ground terminals: Han® HsB, Han® K12/2, Han® K4/X, Han® K6/12, Han® K6/36	2.00	1.40	slotted 0.8 x 4.5 or PH 2
M6	Screw terminals: Han® K power contacts, Han-Eco® PE module	for Han® K see chapter 05, Han-Eco® PE module (1.2-3 Nm)		slotted 0.8 x 4.5

Increasing the tightening torque does not improve considerably the contact resistances.The torque moments were determined when optimum mechanical, thermal and electrical circumstances were given. If the recommended figures are considerably exceeded the wire or the termination can be damaged.

Han-Quick Lock® termination technique

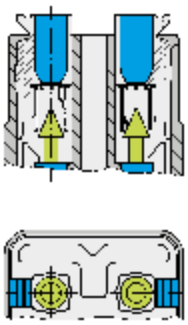

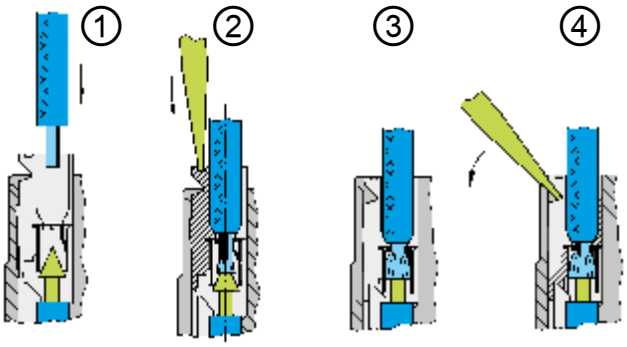

This new termination technique from HARTING combines the reliability and the simple operation of the cage clamp termination with the low space requirements of crimp technology.

Han-Quick Lock® is ideally suited to high contact densities and is considerably superior over other termination techniques. No other technology is so simple, space saving and fast. For this vibration safe termination, no special tools are necessary.

- Fast, simple and robust termination technique
- Field assembly without a special tool
- Compatible also to inserts with other termination technologies
- Combines high contact density similar to crimp termination with the simple connection like a cage clamp terminal
- For stranded wire according to IEC 60228 Class 5

Insert connectors:	Han® 3 A Han® 4 A Han® 7 D Han® 8 D Han® Q 4/2 Han® Q 5/0 Han® Q 8/0 Han® Q 12/0 Han® EE modules Han® DD modules Han® PushPull Power 4/0

Technical characteristics:

Material	
Isolation body	Polycarbonate
Active termination element	Polycarbonate
Quick-Lock spring	Stainless steel
Contact	Copper alloy
Blue slide	Terminal cross-section 0.5 ... 2.5 mm² / AWG 20 ... 14
Black slide	Terminal cross-section 0.25 ... 1.5 mm² / AWG 23 ... 16
Stripping length	10 mm
Insulating resistance	> 10^{10} Ohm
Flammability	according to UL 94 V 0
Termination tool	Screwdriver 0.4 x 2.5 mm bzw. 0.5 x 3.0 mm

Axial screw terminal

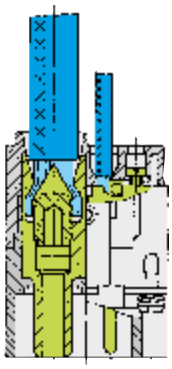

This termination combines the benefits of screw and crimp terminations:

- Less space required
- Easy handling
- No special tools

Remarks on the axial screw technique

The wire gauges mentioned in the catalogue refer to geometric wire gauges of cables.

Background:

According to DIN EN 60 228 for cables and insulated wires the wire gauge will be determined by conductance (Ω/km) and maximum wire diameter. A minimum cable diameter is not specified! (Example: nominal wire gauge = 95 mm² → real, geometric wire gauge = 89 mm²)

Recommendation:

If you want to apply the axial screw technique in combination with cables that have cross sections extremely deviating from the nominal value, this must be checked seperately.

Strain relief:

In order to ensure that the contact is protected against radial stress, you must fix the cable at an adequate distance from the terminal.

Details for professional strain relief design can be found in the standard DIN VDE 0100-520: 2003-06 (see enclosed table).

Outer cable diameter (mm)	Maximum fixing distance (mm)	
	horizontal	vertical
D ≤ 9	250	400
9 < D < 15	300	400
15 < D < 20	350	450
20 < D < 40	400	550

Cables:

The axial screw technology is developed for wires according to DIN EN 60 228 class 5 (see table: Wire assembly according to DIN EN 60 228). Deviating cable assemblies have to be tested separately.

Assembly remarks:

Before starting the assembly the user must ensure that the axial cone is screwed fully downward to completely open the contact chamber.

After stripping the cable insulation the strands must not be twisted and the maximum cable insulation must not exceed the recommended dimension.

Insert the wire completely into the contact chamber until the copper strands reach the bottom. Keep the cable in position while applying the recommended tightening torque.

Maintenance of the axial screw termination:

In order to avoid damage to individual cable strands you must re-apply the tightening torque only once after the initial assembly of the application.

Wire gauge (mm²)	Stranded wires DIN EN 60228 class 2	Fine stranded wires DIN EN 60228 class 5	Super fine stranded wires DIN EN 60228 class 6			
0.5	7 x 0.30	16 x 0.20	28 x 0.15	64 x 0.10	131 x 0.07	256 x 0.05
0.75	7 x 0.37	24 x 0.20	42 x 0.15	96 x 0.10	195 x 0.07	384 x 0.05
1	7 x 0.43	32 x 0.20	56 x 0.15	128 x 0.10	260 x 0.07	512 x 0.05
1.5	7 x 0.52	30 x 0.25	84 x 0.15	192 x 0.10	392 x 0.07	768 x 0.05
2.5	7 x 0.67	50 x 0.25	140 x 0.15	320 x 0.10	651 x 0.07	1280 x 0.05
4	7 x 0.85	56 x 0.30	224 x 0.15	512 x 0.10	1040 x 0.07	
6	7 x 1.05	84 x 0.30	192 x 0.20	768 x 0.10	1560 x 0.07	
10	7 x 1.35	80 x 0.40	320 x 0.20	1280 x 0.10	2600 x 0.07	
16	7 x 1.70	128 x 0.40	512 x 0.20	2048 x 0.10		
25	7 x 2.13	200 x 0.40	800 x 0.20	3200 x 0.10		
35	7 x 2.52	280 x 0.40	1120 x 0.20			
50	19 x 1.83	400 x 0.40	705 x 0.30			
70	19 x 2.17	356 x 0.50	990 x 0.30			
95	19 x 2.52	485 x 0.50	1340 x 0.30			
120	37 x 2.03	614 x 0.50	1690 x 0.30			
150	37 x 2.27	765 x 0.50	2123 x 0.30			
185	37 x 2.52	944 x 0.50	1470 x 0.40			
240	61 x 2.24	1225 x 0.50	1905 x 0.40			

Wire assembly according to DIN EN 60 228

Insert	Wire gauge	Stripping length		Tightening torque		Max. cable insulation diameter	Size hexagon recess	Insert dimension for cable indication (ISK)
	(mm²)	(mm)		(Nm)		(mm)	(SW)	(mm)
Han® K 4/4 finger safe	6 ... 16	6 mm²: 10 mm²: 16 mm²:	11+1 11+1 11+1	6 mm²: 10 mm²: 16 mm²:	2 3 4	8.9	2.5	7.4 PE: 8.9
	10 ... 22	10 mm²: 16 mm²: 22 mm²:	11+1 11+1 11+1	10 mm²: 16 mm²: 22 mm²:	3 4 4	8.9 8.9 11	2.5	7.4 7.4 5.4 PE: 8.9
Han® K 4/4	6 ... 16	6 mm²: 10 mm²: 16 mm²:	11+1 11+1 11+1	6 mm²: 10 mm²: 16 mm²:	2 3 4	8.9	2.5	7.4 PE: 8.9
	10 ... 22	10 mm²: 16 mm²: 22 mm²:	11+1 11+1 13+1	10 mm²: 16 mm²: 22 mm²:	3 4 4	8.9 8.9 11	2.5	7.4 7.4 5.4 PE: 8.9
Han® K 6/12	2.5 ... 8	2.5 mm²: 4 mm²: 6 mm²: 8 mm²:	5+1 5+1 8+1 8+1	2.5 mm²: 4 mm²: 6 mm²: 8 mm²:	1.5 1.5 2 2	6.2	2	7.4
	6 ... 10	6 mm²: 8 mm²: 10 mm²:	8+1 8+1 8+1	6 mm²: 8 mm²: 10 mm²:	2 2 2	6.2	2	4.7
Han® K 6/6	10 ... 25	10 mm²: 16 mm²: 25 mm²:	13+/-1 13+/-1 13+/-1	10 mm²: 16 mm²: 25 mm²:	6 6 7	11.4	4	4.9
	16 ... 35	16 mm²: 25 mm²: 35 mm²:	13+/-1 13+/-1 13+/-1	16 mm²: 25 mm²: 35 mm²:	6 7 8	11.4	4	4.9
Han® K 8/0	10 ... 25	10 mm²: 16 mm²: 25 mm²:	13+/-1 13+/-1 13+/-1	10 mm²: 16 mm²: 25 mm²:	6 6 7	11.4	4	4.75
Han® Q 2/0 Han® Q 2/0 High Voltage	2.5 ... 10	2.5 mm²: 4 mm²: 6 mm²: 10 mm²:	8+1 8+1 8+1 8+1	2.5 mm²: 4 mm²: 6 mm²: 10 mm²:	1.8 1.8 1.8 1.8	7.3	2	5.6
Han® Q 4/2 Han® Q 4/2 with Han-Quick Lock®	4 ... 10	4 mm²: 6 mm²: 10 mm²:	8+1 8+1 8+1	4 mm²: 6 mm²: 10 mm²:	1.8 1.8 1.8	7.3	2	5.6
Han® 200 A module without PE Han® 200 A module with PE	25 ... 40	25 mm²: 40 mm²:	16 16	25 mm²: 40 mm²:	8 8	12 16	5	0
	40 ...70	40 mm²: 70 mm²:	16 16	40 mm²: 70 mm²:	9 10	12 16	5	0
Han® 100 A module	6 ... 10	6 mm²: 8 mm²: 10 mm²:	13+/-1 13+/-1 13+/-1	6 mm²: 8 mm²: 10 mm²:	4 4 4	11.4	2.5	4.9
	10 ... 25	10 mm²: 16 mm²: 25 mm²:	13+/-1 13+/-1 13+/-1	10 mm²: 16 mm²: 25 mm²:	6 6 7	11.4	4	4.9
	16 ... 35	16 mm²: 25 mm²: 35 mm²:	13+/-1 13+/-1 13+/-1	16 mm²: 25 mm²: 35 mm²:	6 7 8	11.4	4	4.9
	38	38 mm²:	13+/-1	38 mm²:	8	11.4	4	4.9
Han® 70 A module	6 ... 16	6 mm²: 10 mm²: 16 mm²:	11+1 11+1 11+1	6 mm²: 10 mm²: 16 mm²:	2 3 4	8.9	2.5	7.4
	14 ... 22	14 mm²: 16 mm²: 22 mm²:	12.5+1 12.5+1 12.5+1	14 mm²: 16 mm²: 22 mm²:	4 4 4	10	2.5	5.9
Han® 40 A module	2.5 ... 8	2.5 mm²: 4 mm²: 6 mm²: 8 mm²:	5+1 5+1 8+1 11+1	2.5 mm²: 4 mm²: 6 mm²: 10 mm²:	1.5 1.5 2 2	4 4 6 10.5	2	4.7
	6 ... 10	6 mm²: 10 mm²:	8+1 11+1	6 mm²: 10 mm²:	2 2	6 10.5	2	4.7

Insert	Wire gauge	Stripping length		Tightening torque		Max. cable insulation diameter	Size hexagon recess	Insert dimension for cable indication (ISK)
	(mm²)	(mm)		(Nm)		(mm)	(SW)	(mm)
Han® C module with axial screw terminal	2.5 ... 8	2.5 mm²: 4 mm²: 6 mm²: 8 mm²:	5+1 5+1 8+1 8+1	2.5 mm²: 4 mm²: 6 mm²: 8 mm²:	1.5 1.5 2 2	4 4 6 8.2	2	5.2
	6 ... 10	6 mm²: 10 mm²:	8+1 11+1	6 mm²: 10 mm²:	2 2	6 8.2	2	5.2
Han® K3/0 straight	25 ... 40	25 mm²: 40 mm²:	22 22	25 mm²: 40 mm²:	8 8	15	5	8.2
	35 ... 70	35 mm²: 50 mm²: 70 mm²:	22 22 22	35 mm²: 50 mm²: 70 mm²:	8 9 10	15	5	8.2
Han® K3/0 angled	25 ... 40	25 mm²: 40 mm²:	22 22	25 mm²: 40 mm²:	8 8	15	5	9
	35 ... 70	35 mm²: 50 mm²: 70 mm²:	22 22 22	35 mm²: 50 mm²: 70 mm²:	8 9 10	15	5	9
Han® K3/2 straight	35 ... 70 PE: 25 ... 40	35 mm²: 50 mm²: 70 mm²: PE:	22 22 22 14	35 mm²: 50 mm²: 70 mm²:	8 9 10	power: 15 PE: 10	5	power: 8.2 PE: 7.2
Han® K3/2 angled	25 ... 40	25 mm²: 40 mm²: PE:	22 22 14	25 mm²: 40 mm²:	8 8	power: 15 PE: 10	5	power: 9.0 PE: 7.2
	35 ... 70 PE: 25 ... 40	35 mm²: 50 mm²: 70 mm²:	22 22 22	35 mm²: 50 mm²: 70 mm²:	8 9 10	power: 15 PE: 10	5	power: 9.0 PE: 7.2
Han® HC Modular 350	20 ... 35	20 mm²: 35 mm²:	19+1 19+1	20 mm²: 35 mm²:	8 8	19.5	5	13
	35 ... 70	35 mm²: 50 mm²: 70 mm²:	19+1 19+1 19+1	35 mm²: 50 mm²: 70 mm²:	8 10 12	19.5	5	13
	95 ... 120	95 mm²: 120 mm²:	19+1 19+1	95 mm²: 120 mm²:	14 16	19.5	5	13
Ground contact for Han® HC Modular	35 ... 70	35 mm²: 50 mm²: 70 mm²:	19+1 19+1 19+1	35 mm²: 50 mm²: 70 mm²:	8 10 12	-	5	-
Han® HC Modular 650	60 ... 70	60 mm²: 70 mm²:	23+2 23+2	60 mm²: 70 mm²:	12 12	27	8	28
	70 ... 120	70 mm²: 95 mm²: 120 mm²:	23+2 23+2 23+2	70 mm²: 95 mm²: 120 mm²:	12 14 16	26.5	8	28
	150 ... 185	150 mm²: 185 mm²:	23+2 23+2	150 mm²: 185 mm²:	17 18	26.5	8	28

Overview inserts with axial screw terminal

Insulating base dimension for the cable marking (ISK)

Marking the proper cable position for the axial screw connection contact point:

By markering the cable sheathing you can specify the proper point for tightening the axial screw on the connecting cable. If the cable is pushed into the insulating base up to the marker (where the marker is flush with the upper edge of the insulating base), then the cable is in the correct position for being connected. The following figure (on the next page) illustrates this process when using the Han® HC Modular 350 contact. The marker and the upper edge of the insulating base are at the same level (as indicated by the dashed line).

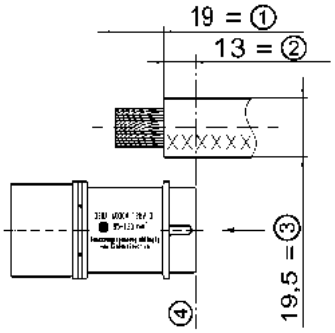

① stripping length
② insulator dimension (ISK dimension)
③ max. cable insulation diameter
④ sink line

Cage-clamp terminal

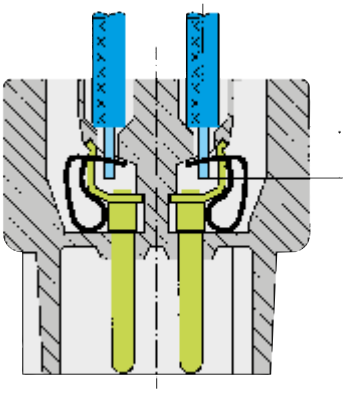

This termination method requires very little preparation of the wire and no special tools, leading to a low installed cost and a high degree of mechanical security.

- For all stranded and solid wires with a cross section 0.14 to 2.5 mm².
- Ease of termination. Conductor and screwdriver are in same plane.
- No special preparation of stripped conductor.
- The larger the conductor the higher the clamping force.
- The termination is vibration-proof.
- Guaranteed constant low resistance connection of the cage-clamp terminal.
- The cage-clamp system is internationally approved.
  VDE, CSA, UL, ÖVE, SEMKO, LCIE (France), Germanischer Lloyd, DET Norske Veritas

One conductor per termination Slot for screwdriver

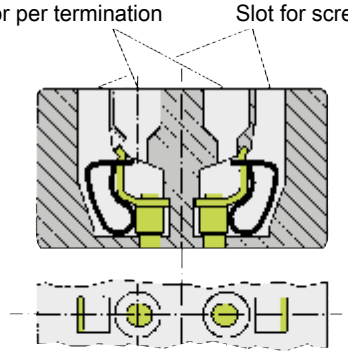

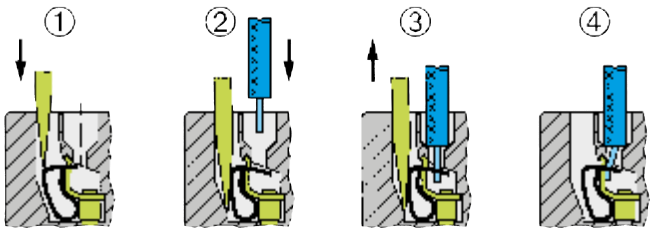

Screwdriver width: 0.6 x 3.5 mm

Kontakteinsätze	max. Leiterquerschnitt		Abisolierlänge
	(mm²)	AWG	l (mm)
Han® ES, Han® Hv ES	0.14 ... 2.5	26 ... 14	7 ... 9
Han® ESS	0.14 ... 2.5	26 ... 14	9 ... 11
Han® ES Press	0.14 ... 2.5	26 ... 14	9 ... 11
Han® K 4/4	0.14 ... 2.5	26 ... 14	7 ... 9
Han® ES Modul	0.14 ... 2.5	26 ... 14	7 ... 9

Han® ES Press

The circular openings in the insert are used to hold the wire that is being connected. Note that there are two rows of rectangular holes (intended for plug-in jumpers) located between the contact openings of the Han® ES Press insert.

Note: Only one wire per termination point!

Each termination point is, in principle, only suited to hold a single wire. When required, two or more wires may be contacted per termination point; contact HARTING Technical Support first for more information.

Note!

An effective and durable spring clamp connection requires that the wire is properly stripped. The correct stripping lengths for the Han® ES Press contacts are specified in the table below, left side.

Assembly

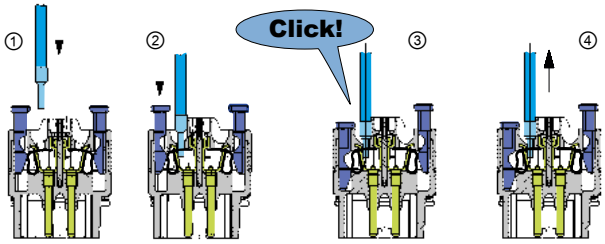

④ = Gentle test pull!

IDC (Insulation displacement terminal)

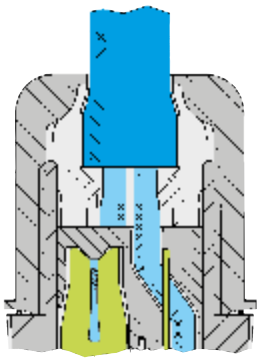

Inserts	max. wire gauge	
	(mm²)	AWG
M8-S/M12-S	0.14 ... 0.34	26 ... 22
Circular connectors M12 angled	0.25 ... 0.50	24 (7/32) ... 22
Circular connectors M12-L	0.34 ... 0.75	22 ... 18
M12-L PROFIBUS	0.25 ... 0.34	24 ... 22
M12-L Ethernet	0.25 ... 0.34	24 ... 22
	0.34 ... 0.5	22 ... 18
Panel feed through Pg 13.5 /M20	0.75 ... 1.50	18 ... 16
Panel feed through Pg 9	0.25 ... 0.50	24 (7/32) ... 22
HARAX® 3 A	0.75 ... 1.5	18 ... 16

General

The choice of connectors entails more than just considering factors such as functionality, the number of contacts, current and voltage ratings. It is equally important to take account of where the connectors are to be used and the prevailing ambient conditions. This in turn means that, dependent on the conditions under which they are to be installed and pursuant to the relevant standards, different voltage and current ratings may apply for the same connectors.

The most important influencing factors and the corresponding electrical characteristics of the associated connectors are illustrated here in greater detail.

Overvoltage category

The overvoltage category is dependent on the mains voltage and the location at which the equipment is installed. It describes the maximum overvoltage resistance of a device in the event of a power supply system fault, e. g. in the event of a lightening strike.

The overvoltage category affects the dimensioning of components in that it determines the clearance air gap. Pursuant to the relevant standards, there are 4 overvoltage categories.

Equipment for industrial use, such as fall HARTING heavy duty Han connector, fall into Overvoltage Category III.

Extract from DIN VDE 0110-1 and IEC 60 664-1, Para. 2.2.2.1.1

Equipment of overvoltage category IV is for use at the origin of the installation.

Note 1: Examples of such equipment are electricity meters and primary overcurrent protection equipment.

Equipment of overvoltage category III is equipment in fixed installations and for cases where the reliability and the availability of the equipment is subject to special requirements.

Note 2: Examples of such equipment are switches in the fixed installation and equipment for industrial use with permanent connection to the fixed installation.

Equipment of overvoltage category II is energy-consuming equipment to be supplied from the fixed installation.

Note 3: Examples of such equipment are appliances, portable tools and other household equipment with similar loads.

If such equipment is subjected to special requirements with regard to reliability and availability, overvoltage category III applies.

Equipment of overvoltage category I is equipment for connection to circuits in which measures are taken to limit transient overvoltages to an appropriately low level.

Note: Examples are protected electronic circuits.

Rated impulse voltages (Table B2 of DIN EN 60 664-1)

Voltage line-to-neutral derived from nominal voltages A.C. or D.C. up to and including	Nominal voltages presently used in the world (= Rated insulation voltage of equipment)				Rated impulse voltage for equipment			
	Three-phase 4-wire systems with earthed neutral	Three-phase 3-wire systems earthed or unearthed	Single-phase 2-wire systems A.C. or D.C.	Single-phase 3-wire systems A.C. or D.C.	Overvoltage category			
	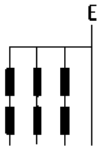	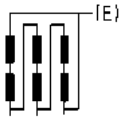			I	II	III	IV
					Special protected levels	Level for electrical equipment (household and others)	Level for distribution supply systems	Input level
V	V	V	V	V	V	V	V	V
50			12.5 24 25 30 42 48	30 ... 60	330	500	800	1500
100	66/115	66	60		500	800	1500	2500
150	120/208* 127/220	115, 120 127	100** 110, 220	100 ... 200** 110 ... 220 120 .. 240	800	1500	2500	4000
300	220/380, 230/400 240/415, 260/440 277/480	200**, 220 230, 240 260, 277	220	220 ... 440	1500	2500	4000	6000
600	347/600, 380/660 400/690, 417/720 480/830	347, 380, 400 415, 440, 480 500, 577, 600	480	480 ... 960	2500	4000	6000	8000
1000		660 690, 720 830, 1000	1000		4000	6000	8000	12 000

* ... Practice in the U.S.A and in Canada
** ... Practice in Japan

Pollution degree

The dimensioning of operating equipment is dependent on environmental conditions. Any pollution or contamination may give rise to conductivity that, in combination with moisture, may affect the insulating properties of the surface on which it is deposited. The pollution degree influences the design of components in terms of the creepage distance.

The pollution degree is defined for exposed, unprotected insulation on the basis of environmental conditions.

HARTING heavy duty Han connectors are designed as standard for Pollution Degree 3.

Pollution degree 1
in air-conditioned or clean, dry rooms, such as computer and measuring instrument rooms, for example.

Pollution degree 2
in residential, sales and other business premises, precision engineering workshops, laboratories, testing bays, rooms used for medical purposes. As a result of occasional moisture condensation, it is to be anticipated that pollution/contamination may be temporarily conductive.

Pollution degree 3
in industrial, commercial and agricultural premises, unheated storage premises, workshops or boiler rooms, also for the electrical components of assembly or mounting equipment and machine tools.

Pollution degree 4
in outdoor or exterior areas such as equipment mounted on the roofs of locomotives or tramcars.

Extract from DIN EN 60 664-1 (VDE 0110-1), Para. 4.6.2

Pollution degree 1: No pollution or only dry, non-conductive pollution occurs. The pollution has no influence.

Pollution degree 2: Only non-conductive pollution occurs except that occasionally a temporary conductivity caused by condensation is to be excepted.

Pollution degree 3: Conductive pollution occurs or dry non-conductive pollution occurs which becomes conductive due to condensation which is to be expected.

Pollution degree 4: Continuous conductivity occurs due to conductive dust, rain or other wet conditions.

Special ruling for connectors

Subject to compliance with certain preconditions, the standard for connectors permits a lower pollution degree than that which applies to the installation as a whole. This means that in a pollution degree 3 environment, connectors may be used which are electrically rated for pollution degree 2.
The basis for this is contained in DIN EN 61 984, Para. 6.19.2.3.

Extract form DIN EN 61 984, Para. 6.19.2.3

For a connector with a degree of protection IP 54 or higher according to IEC 60 529 the insulating parts inside the enclosure may be dimensioned for a lower pollution degree.

This also applies to mated connectors where enclosure is ensured by the connector housing and which may only be disengaged for test and maintenance purposes.

The conditions fulfills,

- a connector which is protected to at least IP 54 as per IEC 60 529,
- a connector which is installed in a housing and which as described in the standard is disconnected for testing and maintenance purposes only,
- a connector which is installed in a housing and which when disconnected is protected by a cap or cover to at least IP 54,
- a connector located inside a switching cabinet to at least IP 54.

These conditions do not extend to connectors which when disconnected remain exposed to the industrial atmosphere for an indefinite period.

It should be noted that pollution can affect a connector from the inside of an installation outwards.

Typical applications in which to choose pollution degree 2 connectors:

- A connector serving a drive motor which is disconnected only for the purpose of replacing a defective motor, even when the plant or system otherwise calls for pollution degree 3.
- Connectors serving a machine of modular design which are disconnected for transport purposes only and enable rapid erection and reliable commissioning. In transit, protective covers or adequate packing must be provided to ensure that the connectors are not affected by pollution/contamination.
- Connectors located inside a switching cabinet to IP 54. In such cases, it is even possible to dispense with the IP 54 housings of the connectors themselves.

Specifying electrical data

Electrical data for connectors are specified as per DIN EN 61 984.

This example identifies a connector suitable for use in an unearthed power system or earthed delta circuit (see page 00.22, Table B2 of DIN EN 60 664-1):

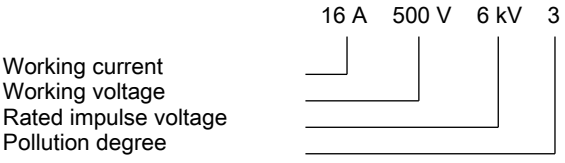

This example identifies a connector suitable exclusively for use in earthed power systems (see page 00.22, Table B2 of DIN EN 60 664-1):

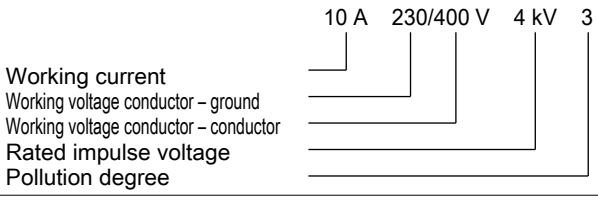

Other terms explained

Clearance air gap
The shortest distance through the air between two conductive elements (see DIN EN 60 664-1 (VDE 0110-1), Para. 3.2). The air gaps are determined by the surge voltage withstand level.

Creepage distance
Shortest distance on the surface of an solid insulating material between two conductive elements (see DIN EN 60 664-1 (VDE 0110-1), Para. 3.3). The creepage distances are dependent on the rated voltage, the pollution degree and the characteristics of the insulating material.

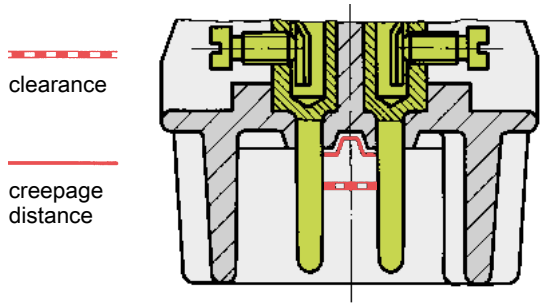

Working voltage
Fixed voltage value on which operating and performance data are based. More than one value for rated voltage or rated voltage range may be specified for the same connector.

Rated impulse voltage
The rated impulse voltage is determined on the basis of the overvoltage category and the nominal power supply voltage. This level in turn directly determines the test voltage for testing the overvoltage resistance of the connector (Waveform voltage in 1.2/50 µs as per IEC 60 060-1).

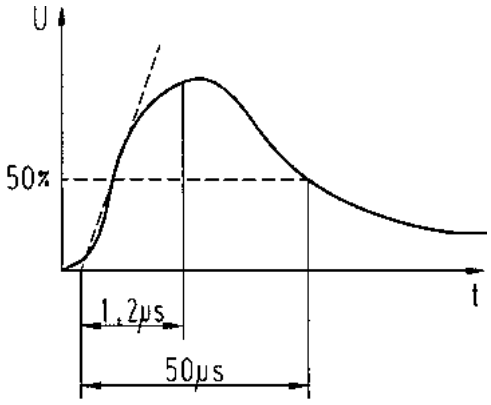

Working current
Fixed current, preferably at an ambient temperature of 40 °C, which the connector can carry on a permanent basis (without interruption), passing simultaneously through all contacts which are in turn connected to the largest possible conductors, without exceeding the upper temperature limit.
The dependence of the rated current on ambient temperature is illustrated in the respective derating diagrams.

Transient overvoltages
Short-term overvoltage lasting a few milliseconds or less, oscillatory or non-oscillatory, generally heavily damped (see DIN EN 60 664-1 (VDE 0110-1, Para. 3.7.2). An overvoltage may occur as a result of switching activities, a defect or lightening surge, or may be intentionally created as a necessary function of the equipment or component.

Power-frequency withstand voltage
A power-frequency overvoltage (50/60 Hz).
Applied for a duration of one minute when testing dielectric strength.
For test voltages in association with surge voltage withstand levels, see extract from Table 8, DIN EN 61 984.

Test voltages (Extract from Table 8, DIN EN 61 984)

Impulse withstand voltage kV (1.2/50 µs) at an altitude of 2 000 m	RMS withstand voltage kV (50/60 Hz)
0.5	0.37
0.8	0.50
1.5	0.84
2.5	1.39
4	2.21
6	3.31
8	4.26
12	6.6

CTI (Comparative Tracking Index)
This figure gives an indication of the conductivity of insulating materials and affects the specified creepage distances. The influence of the CTI value on the creepage distance is as follows: the higher the index value, the shorter the creepage distance. The CTI is used to divide plastics into insulation groups.
Breakdown of insulation groups:

I	600 ≤ CTI
II	400 ≤ CTI < 600
IIIa	175 ≤ CTI < 400
IIIb	100 ≤ CTI < 175

Protection levels as per IEC 60 529
The protection level describes the leak-proof character of housing, e. g. for electrical equipment. It ranges from IP 00 to IP 68. HARTING heavy duty Han connectors feature a standard protection level of IP 65 (see page 00.5, table based on DIN EN 60 529, IEC 60 529).

Derating diagram as per DIN EN 60 512-5-2
These diagrams are used to illustrate the maximum current carrying capacity of components. The illustration follows a curve which shows the current in relation to ambient temperature. Current carrying capacity is limited by the thermal characteristics of contacts and insulating elements which have an upper temperature limit which should not be exceeded.

Current carrying capacity

The current carrying capacity is determined in tests which are conducted on the basis of the DIN EN 60 512-5-2. The current carrying capacity is limited by the thermal properties of materials which are used for inserts as well as by the insulating materials. These components have a limiting temperature which should not be exceeded.

The relationship between the current, the temperature rise (loss at the contact resistance) and the ambient temperature of the connector is represented by a curve. On a linear coordinate system the current lies on the vertical line (ordinate) and the ambient temperature on the horizontal line (abscissa) which ends at the upper limiting temperature.

In another measurement the self-heating (Δt) at different currents is determined.

At least 3 points are determined which are connected to a parabolic curve, the basic curve.

The corrected current carrying capacity curve is derived from this basic curve. The reasons for the correction are external factors that bring an additional limitation to the current carrying capacity, i.e. connectable wire gauge or an unequal dispersion of current.

The derating diagrams pictured as curve have been primarily determined with tin-plated cables as well as with physical cross sections close to the respective ISO-cable cross section.

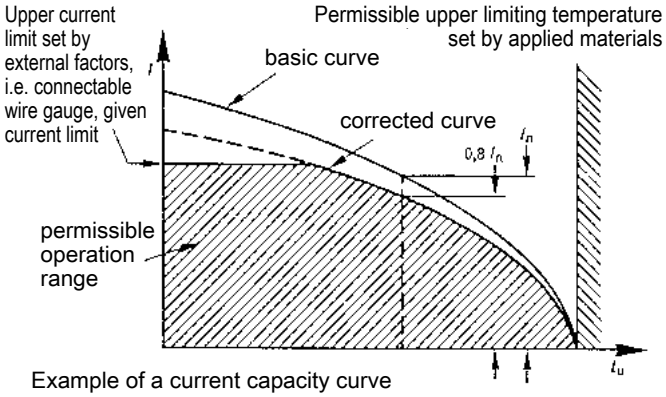

Example of a current capacity curve

Definition: The rated current is the continuous, not interrupted current a connector can take when simultaneous power on all contacts is given, without exceeding the maximum temperature.

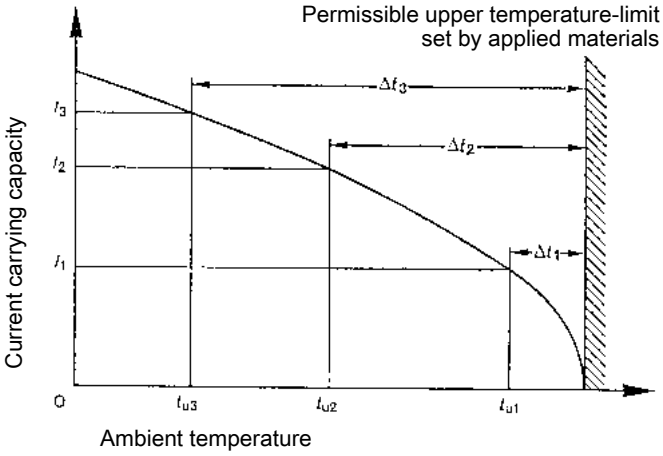

Example of a current carrying curve

Acc. to DIN EN 61 984 the sum of ambient temperature and the temperature rise of a connector shall not exceed the upper limiting temperature. The limiting temperature is valid for a complete connector, that means insert plus housing.

As a result the insert gives the limit for the temperature of a complete connector and thus housings as well.

In practice it is not usual to load all terminals simultaneously with the maximum current. In such a case single contacts can be loaded with a higher current as permitted by the current capacity curve, if less than 20 % of the whole is loaded.

However, for these cases there are no universal rules. The limits have to be determined individually from case to case. It is recommended to proceed in accordance with the relevant rules of the DIN EN 60 512-5-2.

Current carrying capacity of copper wires

	Diameter [mm²] of single wires in a three-phase system	0.75	1	1.5	2.5	4	6	10	16	25	35
	Type of installation										
B1	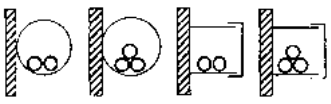 Conductors/single core cables in conduit and cable trunking systems	8.6	10.3	13.5	18.3	24	31	44	59	77	96
B2	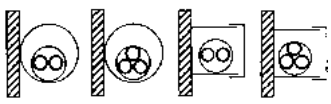 Cables in conduit and cable trunking systems	8.5	10.1	13.1	17.4	23	30	40	54	70	86
C	 Cables on walls	9.8	11.7	15.2	21	28	36	50	66	84	104
E	 Cables on open cable trays	10.4	12.4	16.1	22	30	37	52	70	88	110
	Depiction in accordance with DIN EN 60 204-1 for PVC-insulated copper wires in an ambient temperature of + 40 °C under permanent operating conditions.										
	For different conditions and temperatures, installations, insulation materials or conductors the relevant corrections have to be carried out.										

Transient current carrying capacity

A transient current in circuits can be generated by switching operations such as the starting of a motor or a short circuit in a faulty installation. This can cause thermal stress at the contact. These short and very high increases cannot be dissipated quickly and therefore a local heating effect at the contact is the result. Contact design is an important feature when transient currents are encountered. HARTING contacts are machined from solid material and are therefore relatively unaffected by short overloads when compared to stamped and formed designs. For guidance please see the table below.

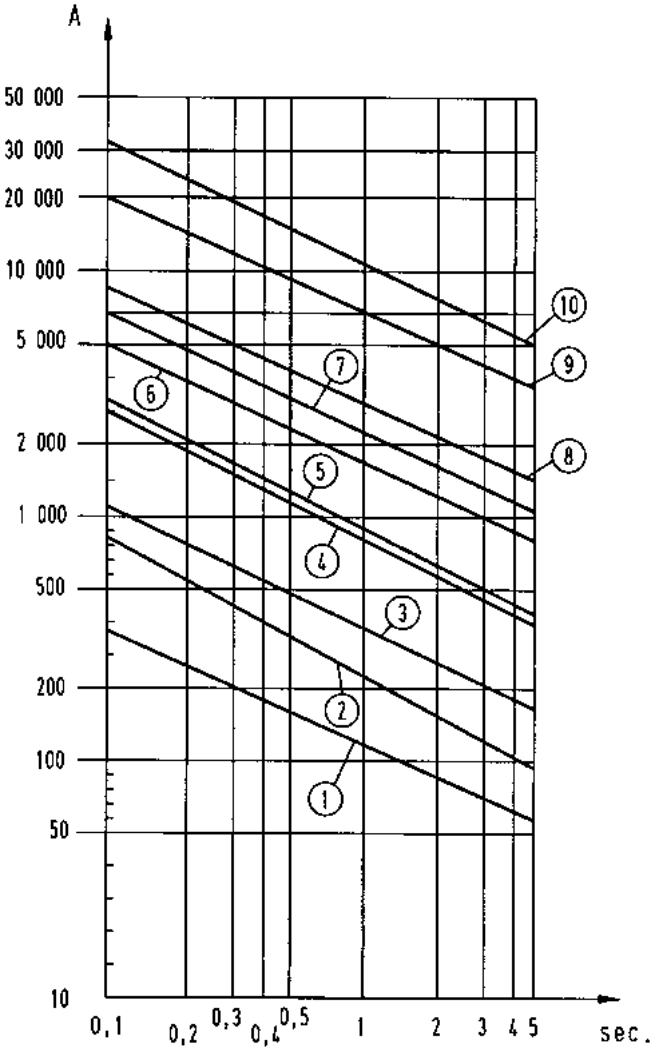

①	Han D®	I_N = 10 A
②	Han® 3 A / 4 A	I_N = 10 A
③	Han A® / Han E®, Han® ES, EE, Q 5/0	I_N = 16 A
④	Han® 6 HsB	I_N = 35 A
⑤	Han® C/K axial	I_N = 40 A
⑥	Han® K 4/8, Han® 70 A Modul	I_N = 80 A
⑦	Han® K 6/6	I_N = 100 A
⑧	Han® K 3/0	I_N = 200 A
⑨	Han® HC-Modular 350	I_N = 350 A
⑩	Han® HC-Modular 650	I_N = 650 A

Short circuit carrying capacity

Low currents and voltages

HARTING's standard contacts have a silver plated surface. This precious metal has excellent conductive properties. In the course of a contact's lifetime, the silver surface generates a black oxide layer due to its affinity to sulphur. This layer is smooth and very thin and is partly interrupted when the contacts are mated and unmated, thus guaranteeing very low contact resistances. In the case of very low currents or voltages small changes to the transmitted signal may be encountered. This is illustrated below where an artifically aged contact representing a twenty year life is compared with a new contact.

In systems where such a change to the transmitted signal could lead to faulty functions and also in extremely aggressive environments, HARTING recommend the use of gold plated contacts.

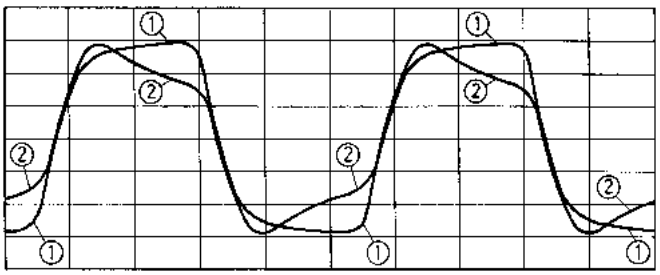

Changes to the transmitted signal after artifical ageing

① new contact

② after ageing

Below is a table derived from actual experiences.

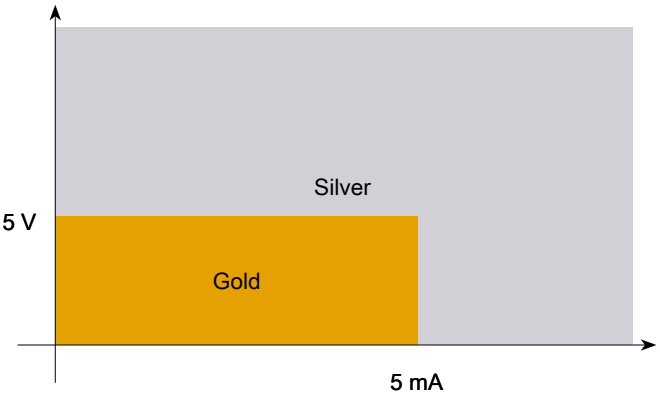

Recommendation

Metric cable thread

The metric thread is specified in the international DIN EN 50262 standard. The standard describes the metric series M 12 to M 63.

The thread dimension in mm is given by the product type description. E.g. M 20 refers to 20 mm thread diameter.

For easy identification, metric threaded hoods and housings are marked with an (M).

Cable range of metric glands:

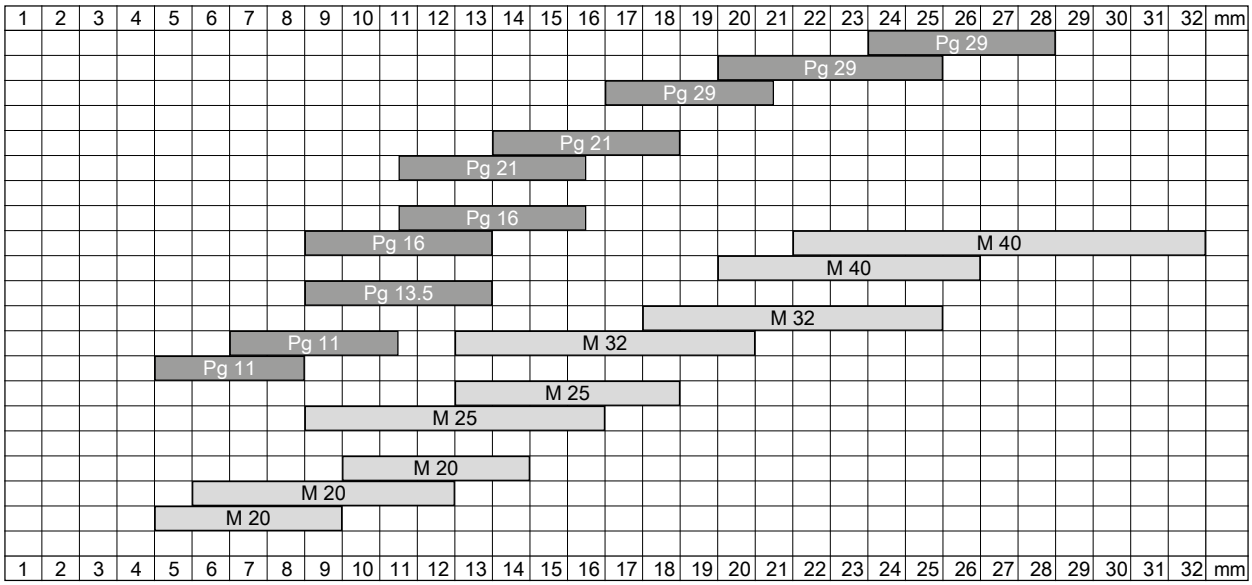

Cable

The diagram shows different cable-diameters, being dependent on wire gauges and number of conductors.

All data are averages for commercial cables.

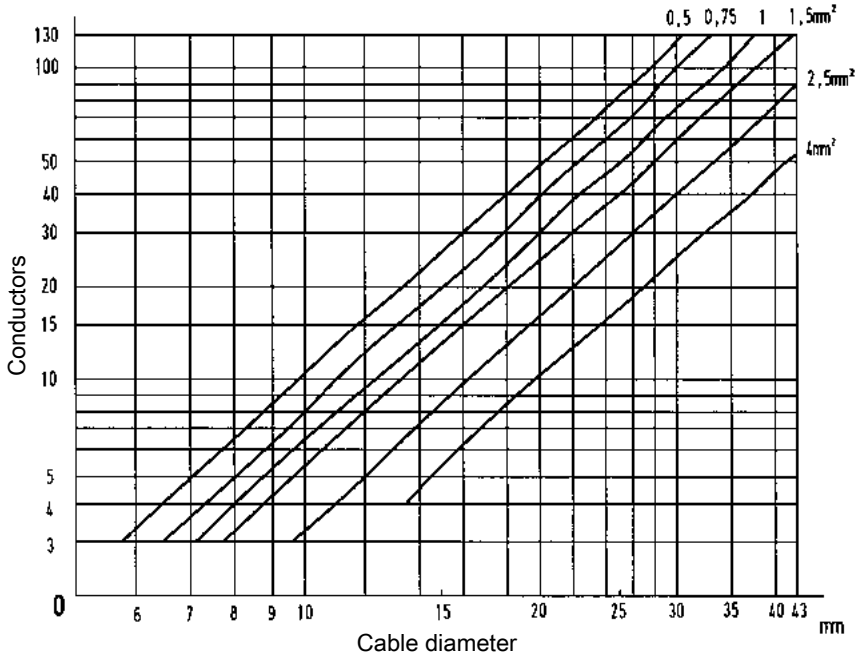

Declaration of Conformity

Han

This Declaration of Conformity is suitable to the European Standard EN ISO/IEC 17050-1:2010 "Conformity assessment – supplier´s declaration of conformity – Part 1: General requirements (ISO/IEC 17050-1:2004; corrected version 2007-06-15); German and English version EN ISO/IEC 17050-1:2010."

We

HARTING Electric GmbH & Co. KG
Wilhelm-Harting-Str. 1
32339 Espelkamp

declare under our own responsibility that the product series of

Heavy Duty Han® Connectors

is in conformity with the following standard(s) or other normative documents:

Connectors -
safety requirements and tests
IEC 61 984

This declaration of conformity refers to the Han®-series

Han A®	Han E®	Han® HsB
Han® B	Han E® AV	Han® K 3/0
Han-Brid®	Han® EE	Han® K 3/2
Han-Com®	Han® EEE	Han® M
Han D®	Han® ES	Han-Modular®
Han D® AV	Han® ESS	Han-Power®
Han DD®	Han® HC Modular 350	Han® Q
Han-Eco®	Han® HPR	Han-*Yellock*®

This declaration does not contain a warranty of characteristics. Safety references are to be considered.

DAkkS Deutsche Akkreditierungsstelle D-PL-12148-01-01

Our testing laboratory is accreditated and monitored by the German Accreditation Body Technology/ (DAkkS).
Reg.-Nr. D-PL-12148-01-01

QUALITY SYSTEM
certified by DQS acc. to ISO 9001 · Reg.-Nr. 2204

Our quality system is certified and monitored by DQS in conformity with the standard DIN EN ISO 9001:2008.
Cert.-Nr. 2204-QM08

Espelkamp, 23.11.2012
Place and Date of publication

Edgar Peter Düning
Managing Director

Espelkamp, 23.11.2012
Place and Date of publication

Andre Beneke
Director Product & Industry Segment Management

Contents

	Page
Han® 3 A / Han® 4 A	**01.2**
Han® 10 A / Han® 16 A / Han® 32 A	**01.5**
Contacts	**01.11**

Features

- Innovative Han-Quick Lock® termination with reduced wiring times
- No special tools required
- Suitable for all metal and plastic hoods and housings of the series Han® 3 A
- for currents up to 10 A

Technical characteristics

Number of contacts	3, 4
Electrical data acc. to IEC 61984	10 A 230/400 V 4 kV 3
Rated current	10 A
Rated voltage conductor-earth	230 V
Rated voltage conductor-conductor	400 V
Rated impulse voltage	4 kV
Pollution degree	3
Alternative electrical data	10 A 250 V 4 kV 3
Rated voltage acc. to UL	600 V
Insulation resistance	≥10^{10} Ω
Limiting temperature	-40 ... +125 °C
Mating cycles	≥500
Material (insert)	Polycarbonate
Colour (insert)	RAL 7032 (pebble grey)
Material (contacts)	Copper alloy
Material flammability class acc. to UL 94	V-0
RoHS	compliant with exemption
RoHS exemptions	**6c:** Copper alloy containing up to 4 % lead by weight

Derating

Current carrying capacity

The current carrying capacity of the connectors is limited by the thermal load capability of the contact element material including the connections and the insulating parts. The derating curve is therefore valid for currents which flow constantly (non-intermittent) through each contact element of the connector evenly, without exceeding the allowed maximum temperature.

Measuring and testing techniques acc. to IEC 60512-5-2

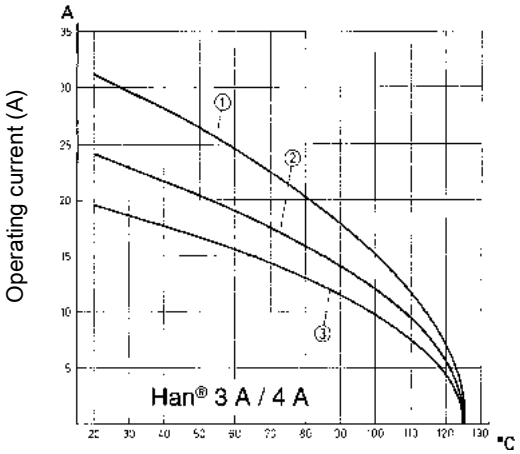

① Conductor cross-section 2.5 mm²
② Conductor cross-section 1.5 mm²
③ Conductor cross-section 1 mm²

Specifications and approvals

EN 60664-1
IEC 61984
UL 1977 ECBT2.E235076
CSA-C22.2 No. 182.3 ECBT8.E235076
DNV GL

Number of contacts

3+ ⏚

10 A 230/400 V 4 kV 3
10 A 250 V 4 kV 3

Identification	Conductor cross-section (mm²)	Part number Male	Part number Female	Drawing (dimensions in mm)
Han A® , Han-Quick Lock® termination, Contact surface: Silver plated  Blue slide	0,5 ... 2,5	09 20 003 2633	09 20 003 2733	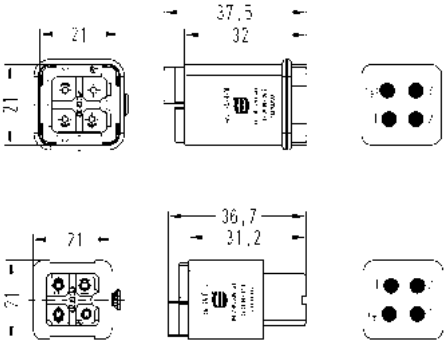
Han A® , Han-Quick Lock® termination, Contact surface: Silver plated  Black slide	0,25 ... 1,5	09 20 003 2634	09 20 003 2734	
Han A® , Screw termination, Contact surface: Silver plated 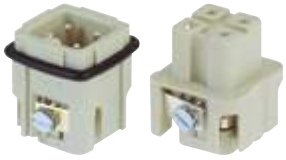	0,75 ... 1,5	09 20 003 2611	09 20 003 2711	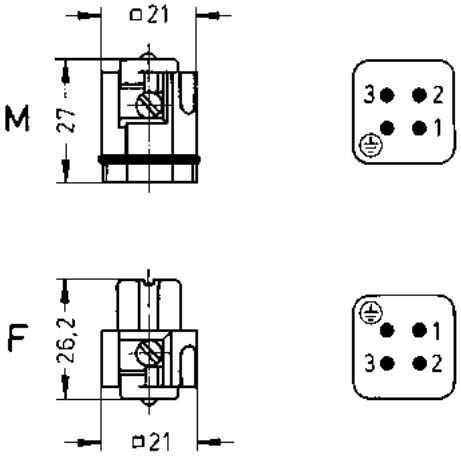 Contact arrangement (view from termination side) Stripping length 4.5 mm Tightening torque 0.25 Nm

Number of contacts

4+ ⏚

10 A 230/400 V 4 kV 3
10 A 250 V 4 kV 3

Identification	Conductor cross-section (mm²)	Part number Male	Part number Female	Drawing (dimensions in mm)
Han A® , Han-Quick Lock® termination, Contact surface: Silver plated  Blue slide	0,5 ... 2,5	09 20 004 2633	09 20 004 2733	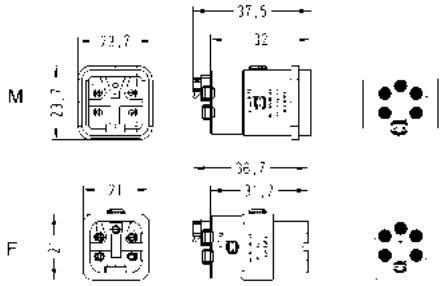 Contact arrangement (view from termination side)
Han A® , Han-Quick Lock® termination, Contact surface: Silver plated  Black slide	0,25 ... 1,5	09 20 004 2634	09 20 004 2734	
Han A® , Screw termination, Contact surface: Silver plated 	0,75 ... 1,5	09 20 004 2611	09 20 004 2711	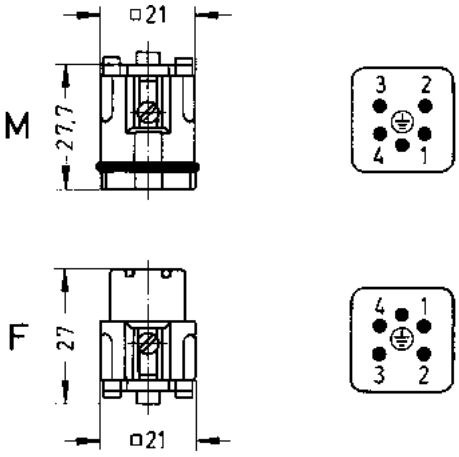 Contact arrangement (view from termination side) Stripping length 4.5 mm Tightening torque 0.25 Nm

Features

- Small size
- Available with crimp and screw termination
- Screw termination also available with wire protection

Technical characteristics

Number of contacts	10, 16, 32
Electrical data acc. to IEC 61984	16 A 250 V 4 kV 3
Rated current	16 A
Rated voltage	250 V
Rated impulse voltage	4 kV
Pollution degree	3
Rated voltage acc. to UL	600 V
Insulation resistance	≥10^{10} Ω
Contact resistance	≤1 mΩ
Limiting temperature	-40 ... +125 °C
Mating cycles	≥500
Material (insert)	Polycarbonate
Colour (insert)	RAL 7032 (pebble grey)
Material (contacts)	Copper alloy
Material flammability class acc. to UL 94	V-0
RoHS	compliant, compliant with exemption
RoHS exemptions	**6c:** Copper alloy containing up to 4 % lead by weight

Derating

Current carrying capacity

The current carrying capacity of the connectors is limited by the thermal load capability of the contact element material including the connections and the insulating parts. The derating curve is therefore valid for currents which flow constantly (non-intermittent) through each contact element of the connector evenly, without exceeding the allowed maximum temperature.

Measuring and testing techniques acc. to IEC 60512-5-2

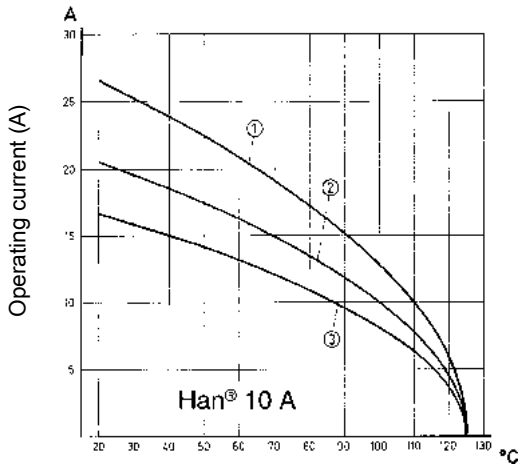

Ambient temperature (°C)

① Conductor cross-section 2.5 mm²
② Conductor cross-section 1.5 mm²
③ Conductor cross-section 1 mm²

Derating

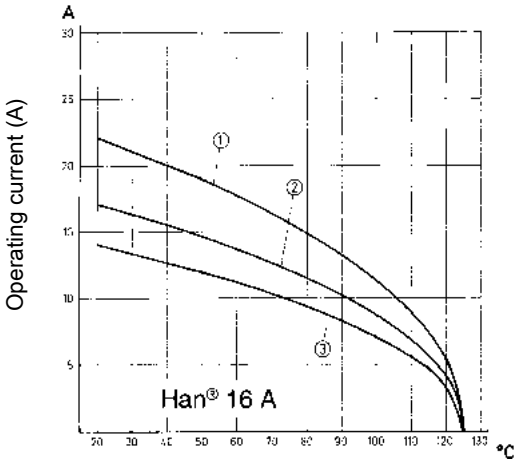

Ambient temperature (°C)

① Conductor cross-section 2.5 mm²
② Conductor cross-section 1.5 mm²
③ Conductor cross-section 1 mm²

Specifications and approvals

EN 60664-1
IEC 61984
UL 1977 ECBT2.E235076
UL 2237 PVVA2.E318390
CSA-C22.2 No. 182.3 PVVA8.E318390
DNV GL

Number of contacts

10+ ⏚

16 A 250 V 4 kV 3

Identification	Conductor cross-section (mm²)	Part number Male	Part number Female	Drawing (dimensions in mm)
Han A® , Crimp termination 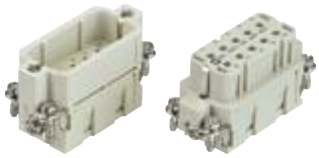 Please order crimp contacts separately.	0,14 ... 4	09 20 010 3001	09 20 010 3101	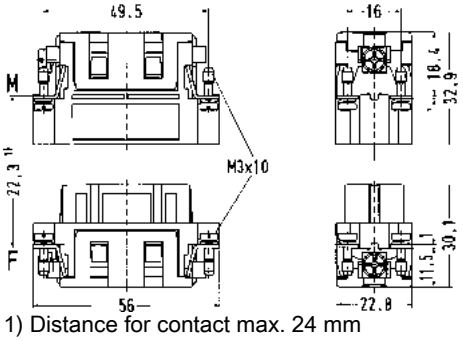 1) Distance for contact max. 24 mm
Han A® , Screw termination, Contact surface: Silver plated 	0,75 ... 2,5	09 20 010 2612	09 20 010 2812	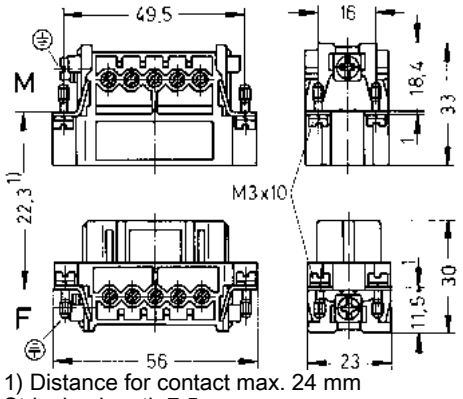 1) Distance for contact max. 24 mm Stripping length 7.5 mm Tightening torque 0.5 Nm
Han A® , Screw termination, With wire protection, Contact surface: Silver plated 	0,75 ... 2,5	09 20 010 2614	09 20 010 2814	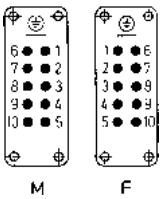 Contact arrangement (view from termination side) 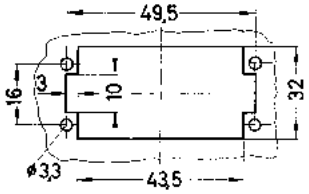 Panel cut out for use without Hoods/Housings

Number of contacts

16+ ⏚

16 A 250 V 4 kV 3

Identification	Conductor cross-section (mm²)	Part number Male	Part number Female	Drawing (dimensions in mm)
Han A® , Crimp termination 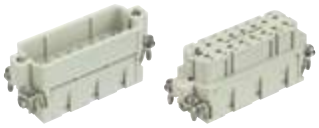 Please order crimp contacts separately.	0,14 ... 4	09 20 016 3001	09 20 016 3101	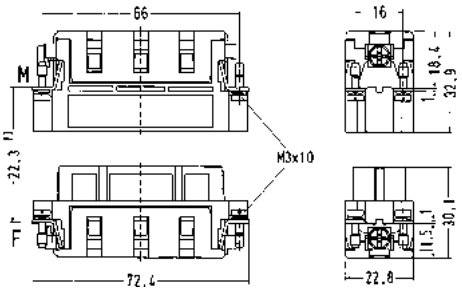 1) Distance for contact max. 24 mm
Han A® , Screw termination, Contact surface: Silver plated 	0,75 ... 2,5	09 20 016 2612	09 20 016 2812	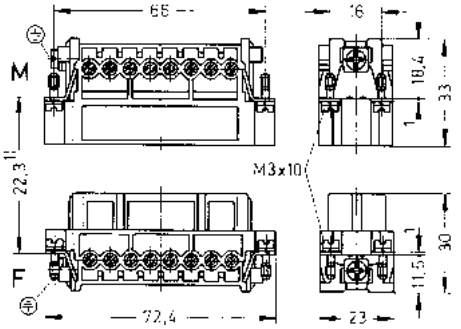 1) Distance for contact max. 24 mm Stripping length 7.5 mm Tightening torque 0.5 Nm
Han A® , Screw termination, With wire protection, Contact surface: Silver plated 	0,75 ... 2,5	09 20 016 2614	09 20 016 2814	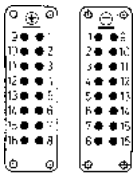 Contact arrangement (view from termination side) 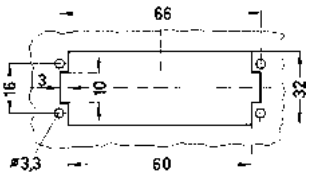 Panel cut out for use without Hoods/Housings

Number of contacts

32+ ⏚

16 A 250 V 4 kV 3

Identification	Conductor cross-section (mm²)	Part number Male	Part number Female	Drawing (dimensions in mm)
Han A® , Crimp termination, 1 ... 16 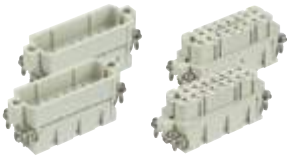 Please order crimp contacts separately. You need two inserts for a complete assembly!	0,14 ... 4	09 20 016 3001	09 20 016 3101	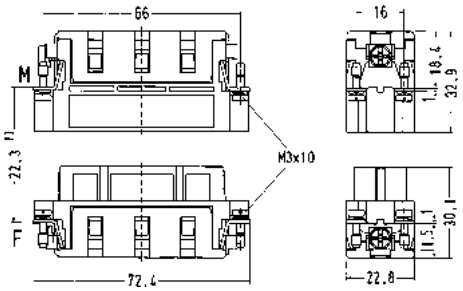 1) Distance for contact max. 24 mm
Han A® , Continuing marking, Crimp termination, 17 ... 32 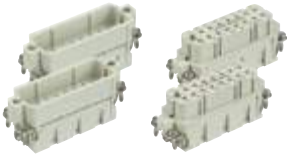 Please order crimp contacts separately. You need two inserts for a complete assembly!	0,14 ... 4	09 20 016 3011	09 20 016 3111	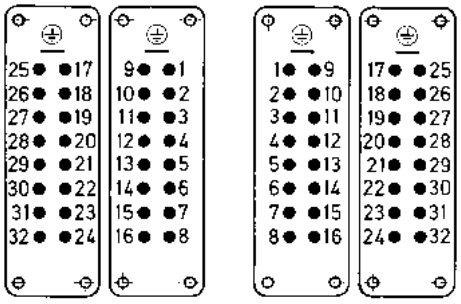 Contact arrangement (view from termination side) 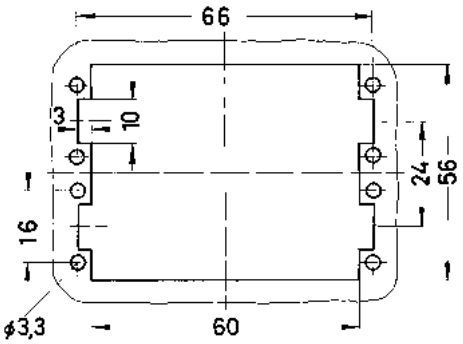 Panel cut out for use without Hoods/Housings

Number of contacts

32+ ⏚

16 A 250 V 4 kV 3

Identification	Conductor cross-section (mm²)	Part number Male	Part number Female	Drawing (dimensions in mm)
Han A® , Screw termination, 1 ... 16 Contact surface: Silver plated  You need two inserts for a complete assembly!	0,75 ... 2,5	09 20 016 2612	09 20 016 2812	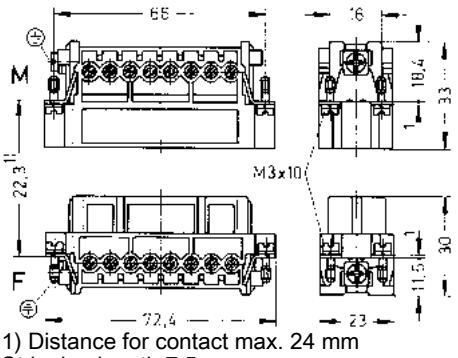 1) Distance for contact max. 24 mm Stripping length 7.5 mm Tightening torque 0.5 Nm
Han A® , Continuing marking, Screw termination, 17 ... 32 Contact surface: Silver plated  You need two inserts for a complete assembly!	0,75 ... 2,5	09 20 016 2613	09 20 016 2813	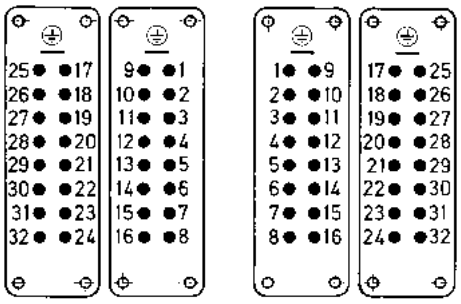 M F Contact arrangement (view from termination side) 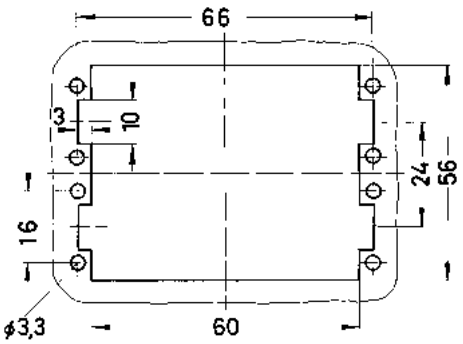 Panel cut out for use without Hoods/Housings

Number of contacts

32+ ⏚

16 A 250 V 4 kV 3

Identification	Conductor cross-section (mm²)	Part number Male	Part number Female	Drawing (dimensions in mm)
Han A® , Screw termination, With wire protection, 1 ... 16 Contact surface: Silver plated 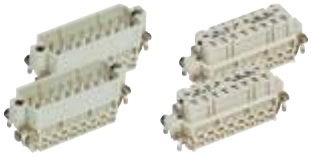 You need two inserts for a complete assembly!	0,75 ... 2,5	09 20 016 2614	09 20 016 2814	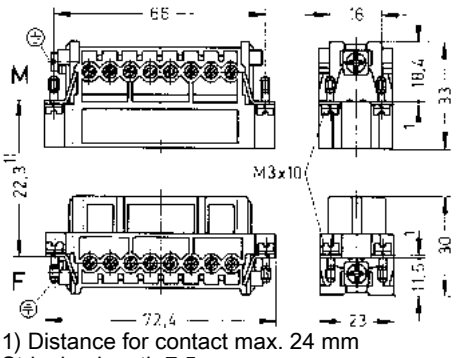 1) Distance for contact max. 24 mm Stripping length 7.5 mm Tightening torque 0.5 Nm
Han A® , Continuing marking, Screw termination, With wire protection, 17 ... 32 Contact surface: Silver plated 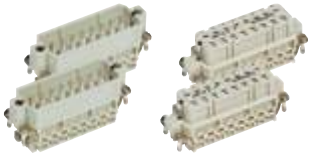 You need two inserts for a complete assembly!	0,75 ... 2,5	09 20 016 2615	09 20 016 2815	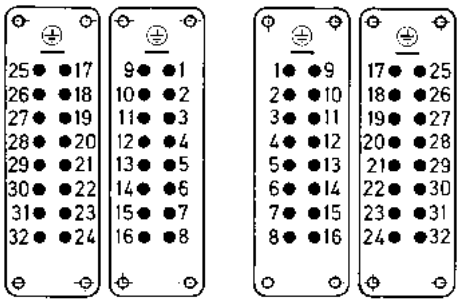 M F Contact arrangement (view from termination side) 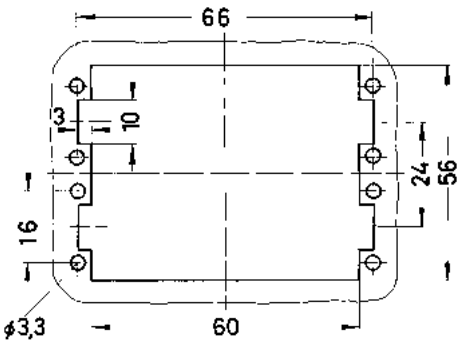 Panel cut out for use without Hoods/Housings

Technical characteristics

Contact resistance	≤1 mΩ
Material (contacts)	Copper alloy
RoHS	compliant with exemption
RoHS exemptions	**6c:** Copper alloy containing up to 4 % lead by weight

Specifications and approvals

EN 60664-1
IEC 61984

Details

Crimping tools see chapter 90

Remarks on the crimp technique
The wire gauges mentioned in the catalogue refer to geometric wire gauges of cables.

Identification	Conductor cross-section (mm²)	Part number Male	Part number Female	Drawing (dimensions in mm)
Han E® , Crimp contact, Contact surface: Silver plated 	0,14 ... 0,37 0,5 0,75 1 1,5 2,5 3 4	09 33 000 6127 09 33 000 6121 09 33 000 6114 09 33 000 6105 09 33 000 6104 09 33 000 6102 09 33 000 6106 09 33 000 6107	09 33 000 6227 09 33 000 6220 09 33 000 6214 09 33 000 6205 09 33 000 6204 09 33 000 6202 09 33 000 6206 09 33 000 6207	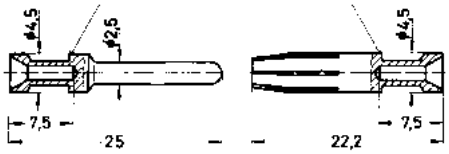

Conductor cross-section		Identification
0.14-0.37 mm²	AWG 26-22	no groove
0.5 mm²	AWG 20	no groove
0.75 mm²	AWG 18	1 groove*
1 mm²	AWG 18	1 groove
1.5 mm²	AWG 16	2 grooves
2.5 mm²	AWG 14	3 grooves
3 mm²	AWG 12	wide groove
4 mm²	AWG 12	no groove
* on the back crimp collar		

Stripping length 7.5 mm

Han E® , Crimp contact, Contact surface: Gold plated 	0,14 ... 0,37 0,5 0,75 1 1,5 2,5 4	09 33 000 6117 09 33 000 6122 09 33 000 6115 09 33 000 6118 09 33 000 6116 09 33 000 6123 09 33 000 6119	09 33 000 6217 09 33 000 6222 09 33 000 6215 09 33 000 6218 09 33 000 6216 09 33 000 6223 09 33 000 6221	

Conductor cross-section		Identification
0.14-0.37 mm²	AWG 26-22	no groove
0.5 mm²	AWG 20	no groove
0.75 mm²	AWG 18	1 groove*
1 mm²	AWG 18	1 groove
1.5 mm²	AWG 16	2 grooves
2.5 mm²	AWG 14	3 grooves
3 mm²	AWG 12	wide groove
4 mm²	AWG 12	no groove
* on the back crimp collar		

Stripping length 7.5 mm



Wind turbine by ENERCON with Han® 3 A – for a fast and reliable installation.

Contents	Page
Han® 7 D	**02.2**
Han® 8 D	**02.4**
Han® 15-128 D	**02.6**
Contacts Han D®	**02.14**
Han DD®	**02.16**
Contacts Han DD®	**02.23**

Features

- Innovative Han-Quick Lock® termination with reduced wiring times
- Time saving rapid termination by use of crimping contacts
- for requirements up to 250 V / 10 A
- Gold and silver contacts available
- Suitable for thermo- and 1 mm FO contacts

Technical characteristics

Number of contacts	7
Electrical data acc. to IEC 61984	10 A 250 V 4 kV 3
Rated current	10 A
Rated voltage	250 V
Rated impulse voltage	4 kV
Pollution degree	3
Rated voltage acc. to UL	600 V
Rated voltage acc. to CSA	600 V
Insulation resistance	≥10^{10} Ω
Contact resistance	≤3 mΩ
Limiting temperature	-40 ... +125 °C
Mating cycles	≥500
Material (insert)	Polycarbonate, Polyamide
Colour (insert)	RAL 7032 (pebble grey)
Material (seal)	NBR
Material (contacts)	Copper alloy
Material flammability class acc. to UL 94	V-0, HB
RoHS	compliant with exemption
RoHS exemptions	**6c:** Copper alloy containing up to 4 % lead by weight

Derating

Current carrying capacity

The current carrying capacity of the connectors is limited by the thermal load capability of the contact element material including the connections and the insulating parts. The derating curve is therefore valid for currents which flow constantly (non-intermittent) through each contact element of the connector evenly, without exceeding the allowed maximum temperature.

Measuring and testing techniques acc. to IEC 60512-5-2

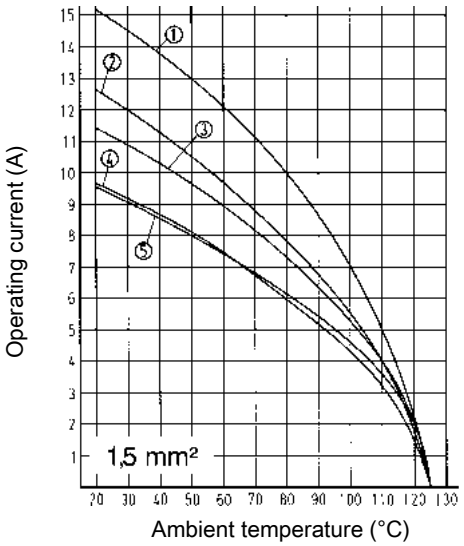

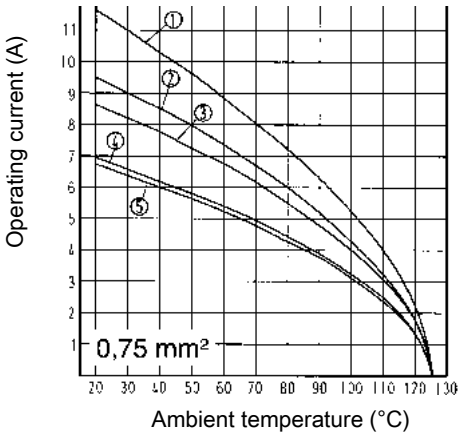

① Han® 7 D ④ Han® 40 D
② Han® 15 D ⑤ Han® 64 D
③ Han® 25 D

Specifications and approvals

EN 60664-1
IEC 61984
EN 175301-801
UL 1977 ECBT2.E235076
CSA-C22.2 No. 182.3 ECBT8.E235076
DNV GL

Number of contacts

7+ ⏚

10 A 250 V 4 kV 3

Identification	Conductor cross-section (mm²)	Part number Male	Part number Female	Drawing (dimensions in mm)
Han D® , Han-Quick Lock® termination, Contact surface: Silver plated  Only for thermoplastic hoods / housings	0,25 ... 1,5	09 21 007 2632	09 21 007 2732	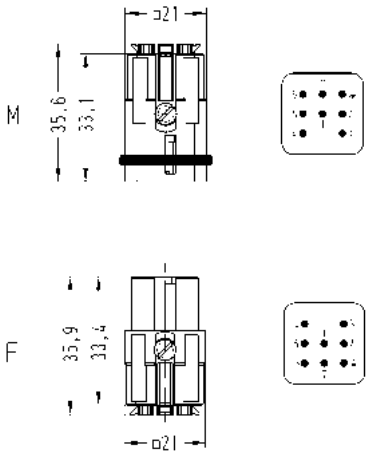 Contact arrangement (view from termination side)
Han D® , Crimp termination  Please order crimp contacts separately. Only for thermoplastic hoods / housings	0,14 ... 2,5	09 21 007 3031	09 21 007 3131	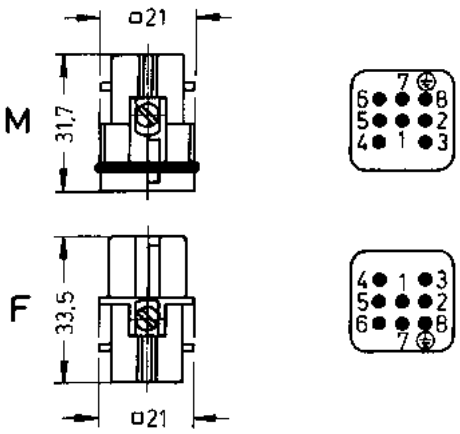 Contact arrangement (view from termination side)

Features

- Innovative Han-Quick Lock® termination with reduced wiring times
- Time saving rapid termination by use of crimping contacts
- Gold and silver contacts available
- Suitable for metal hoods and housings size Han® 3 A
- High density of contacts

Technical characteristics

Number of contacts	8
Electrical data acc. to IEC 61984	10 A 50 V 0,8 kV 3
Rated current	10 A
Rated voltage	50 V
Rated impulse voltage	0.8 kV
Pollution degree	3
Rated voltage	50 V AC, 120 V DC
Rated voltage acc. to UL	50 V
Rated voltage acc. to CSA	50 V
Insulation resistance	≥10^{10} Ω
Contact resistance	≤3 mΩ
Limiting temperature	-40 ... +125 °C
Mating cycles	≥500
Material (insert)	Polycarbonate, Polyamide
Colour (insert)	RAL 7032 (pebble grey)
Material (seal)	NBR
Material (contacts)	Copper alloy
Material flammability class acc. to UL 94	V-0, HB
RoHS	compliant with exemption
RoHS exemptions	**6c:** Copper alloy containing up to 4 % lead by weight

Specifications and approvals

EN 60664-1
IEC 61984
EN 175301-801
UL 1977 ECBT2.E235076
CSA-C22.2 No. 182.3 ECBT8.E235076
DNV GL

Number of contacts

8

10 A 50 V 0,8 kV 3

Identification	Conductor cross-section (mm²)	Part number Male	Part number Female	Drawing (dimensions in mm)
Han D® , Han-Quick Lock® termination, Contact surface: Silver plated  for thermoplastics and metal hoods/housings	0,25 ... 1,5	09 36 008 2632	09 36 008 2732	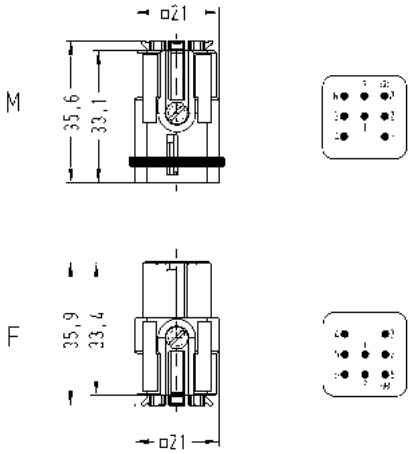 Contact arrangement (view from termination side)
Han D® , Crimp termination  Please order crimp contacts separately. for thermoplastics and metal hoods/housings	0,14 ... 2,5	09 36 008 3001	09 36 008 3101	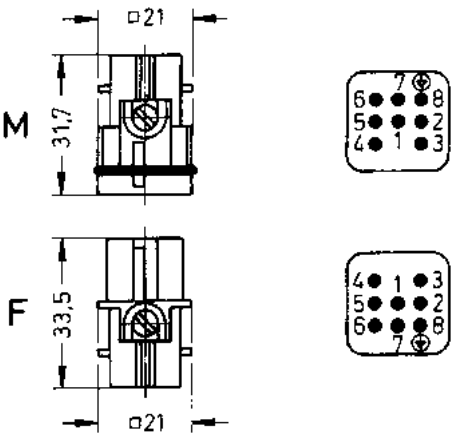 Contact arrangement (view from termination side)

Features

- High density of contacts
- for requirements up to 250 V / 10 A
- Time saving rapid termination by use of crimping contacts
- Gold and silver contacts available
- Suitable for thermo- and 1 mm FO contacts

Technical characteristics

Number of contacts	15, 25, 40, 50, 64, 80, 128
Electrical data acc. to IEC 61984	10 A 250 V 4 kV 3
Rated current	10 A
Rated voltage	250 V
Rated impulse voltage	4 kV
Pollution degree	3
Rated voltage acc. to UL	600 V
Rated voltage acc. to CSA	600 V
Insulation resistance	≥10^{10} Ω
Contact resistance	≤3 mΩ
Limiting temperature	-40 ... +125 °C
Mating cycles	≥500
Dimensions wire wrap post	1 x 1 mm
Termination length	22 mm
Material (insert)	Polycarbonate
Colour (insert)	RAL 7032 (pebble grey)
Material (contacts)	Copper alloy
Material flammability class acc. to UL 94	V-0
RoHS	compliant, compliant with exemption
RoHS exemptions	**6c:** Copper alloy containing up to 4 % lead by weight

Derating

Current carrying capacity

The current carrying capacity of the connectors is limited by the thermal load capability of the contact element material including the connections and the insulating parts. The derating curve is therefore valid for currents which flow constantly (non-intermittent) through each contact element of the connector evenly, without exceeding the allowed maximum temperature.

Measuring and testing techniques acc. to IEC 60512-5-2

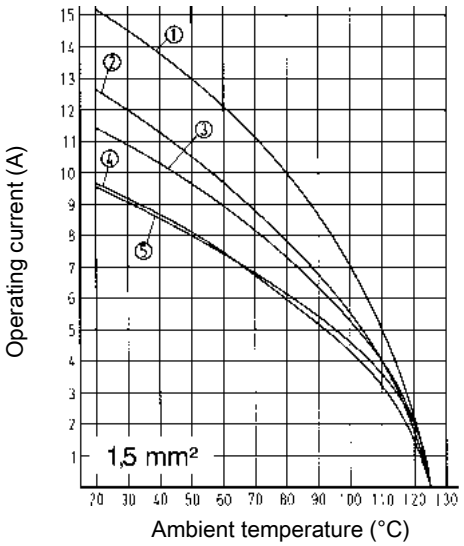

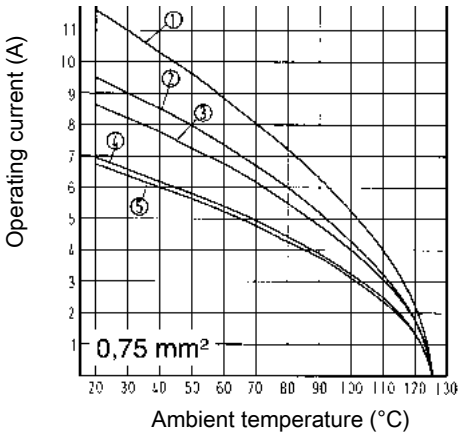

① Han® 7 D ④ Han® 40 D
② Han® 15 D ⑤ Han® 64 D
③ Han® 25 D

Specifications and approvals

EN 60664-1
IEC 61984
EN 175301-801
UL 1977 ECBT2.E235076
CSA-C22.2 No. 182.3 ECBT8.E235076
DNV GL

Details

ATTENTION! Guide pins and bushes are prescribed (see chapter 80).

Number of contacts

15+ ⏚

10 A 250 V 4 kV 3

Identification	Conductor cross-section (mm²)	Part number Male	Part number Female	Drawing (dimensions in mm)
Han D® , Crimp termination 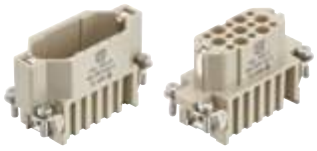 Please order crimp contacts separately.	0,14 ... 2,5	09 21 015 3001	09 21 015 3101	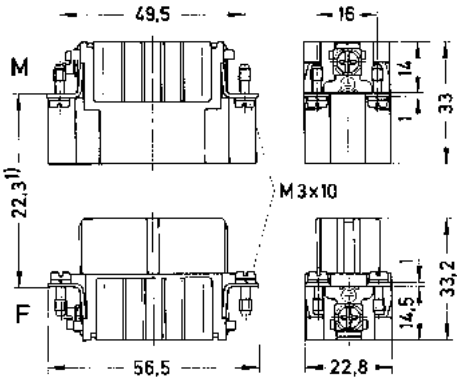 1) distance for contact max. 24 mm
Han D® , Wrap termination, Contact surface: Silver plated 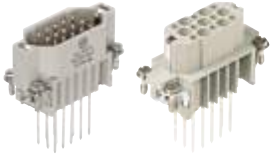		09 21 015 2601	09 21 015 2701	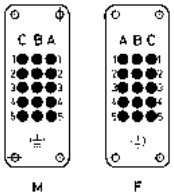 Contact arrangement (view from termination side) 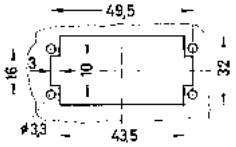 Panel cut out for use without Hoods/Housings

Number of contacts

25+ ⏚

10 A 250 V 4 kV 3

Identification	Conductor cross-section (mm²)	Part number Male	Part number Female	Drawing (dimensions in mm)
Han D® , Crimp termination 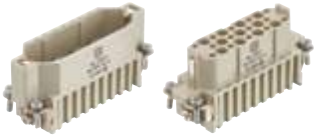 Please order crimp contacts separately.	0,14 ... 2,5	09 21 025 3001	09 21 025 3101	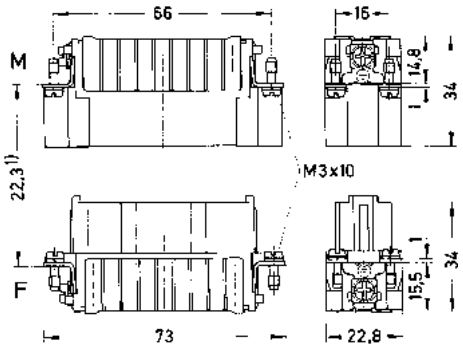 1) distance for contact max. 24 mm
Han D® , Wrap termination, Contact surface: Silver plated 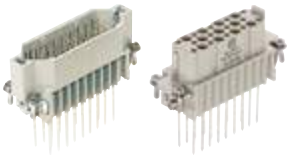		09 21 025 2601	09 21 025 2701	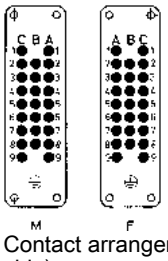 Contact arrangement (view from termination side) 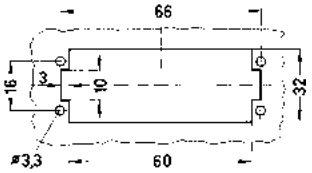 Panel cut out for use without Hoods/Housings

Number of contacts

40+ ⏚

10 A 250 V 4 kV 3

Identification	Conductor cross-section (mm²)	Part number Male	Part number Female	Drawing (dimensions in mm)
Han D® , Crimp termination  Please order crimp contacts separately.	0,14 ... 2,5	09 21 040 3001	09 21 040 3101	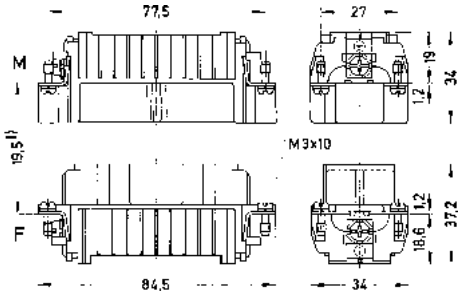 1) distance for contact max. 21 mm
Han D® , Wrap termination, Contact surface: Silver plated 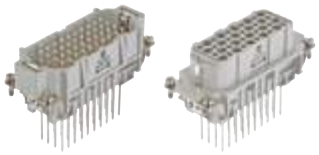		09 21 040 2601	09 21 040 2701	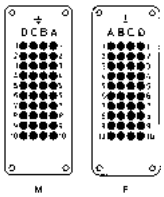 Contact arrangement (view from termination side) 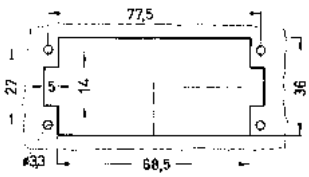 Panel cut out for use without Hoods/Housings

Number of contacts

50+ ⏚

10 A 250 V 4 kV 3

Identification	Conductor cross-section (mm²)	Part number Male	Part number Female	Drawing (dimensions in mm)
Han D® , Crimp termination 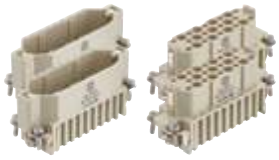 Please order crimp contacts separately. You need two inserts for a complete assembly!	0,14 ... 2,5	09 21 025 3001	09 21 025 3101	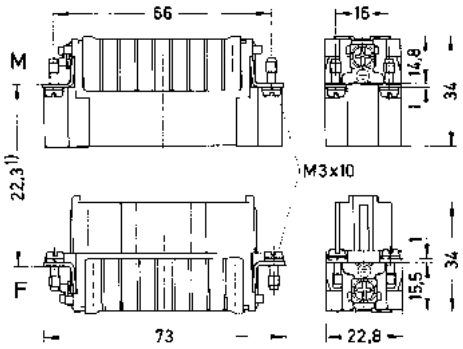 1) distance for contact max. 24 mm
Han D® , Wrap termination, Contact surface: Silver plated 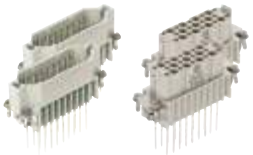 You need two inserts for a complete assembly!		09 21 025 2601	09 21 025 2701	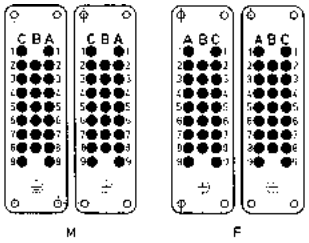 Contact arrangement (view from termination side) 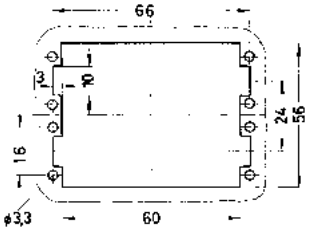 Panel cut out for use without Hoods/Housings

Number of contacts

64+ ⏚

10 A 250 V 4 kV 3

Identification	Conductor cross-section (mm²)	Part number Male	Part number Female	Drawing (dimensions in mm)
Han D® , Crimp termination  Please order crimp contacts separately.	0,14 ... 2,5	09 21 064 3001	09 21 064 3101	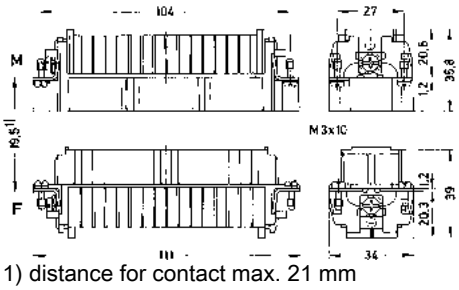 1) distance for contact max. 21 mm
Han D® , Wrap termination, Contact surface: Silver plated 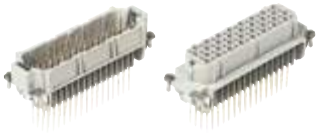		09 21 064 2601	09 21 064 2701	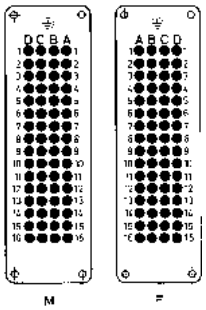 Contact arrangement (view from termination side) 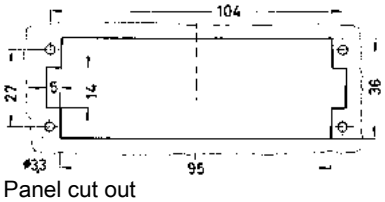 Panel cut out for use without Hoods/Housings

Number of contacts

80+ ⏚

10 A 250 V 4 kV 3

Identification	Conductor cross-section (mm²)	Part number Male	Part number Female	Drawing (dimensions in mm)
Han D® , Crimp termination  Please order crimp contacts separately. You need two inserts for a complete assembly!	0,14 ... 2,5	09 21 040 3001	09 21 040 3101	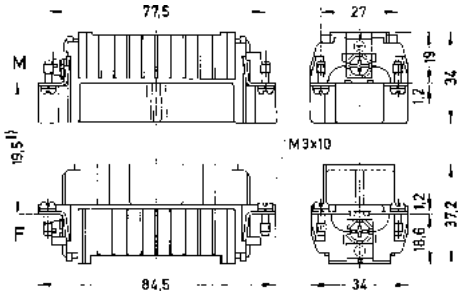 1) distance for contact max. 21 mm
Han D® , Wrap termination, Contact surface: Silver plated 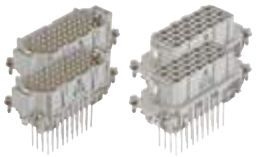 You need two inserts for a complete assembly!		09 21 040 2601	09 21 040 2701	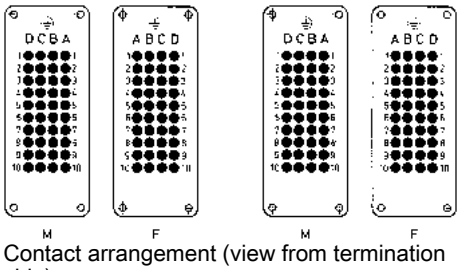 Contact arrangement (view from termination side) 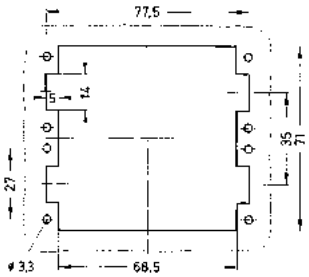 Panel cut out for use without Hoods/Housings

Number of contacts

128+ ⏚

10 A 250 V 4 kV 3

Identification	Conductor cross-section (mm²)	Part number Male	Part number Female	Drawing (dimensions in mm)
Han D® , Crimp termination  Please order crimp contacts separately. You need two inserts for a complete assembly!	0,14 ... 2,5	09 21 064 3001	09 21 064 3101	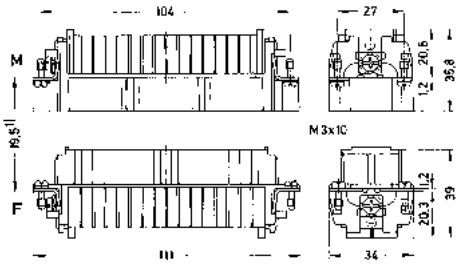 1) distance for contact max. 21 mm
Han D® , Wrap termination, Contact surface: Silver plated  You need two inserts for a complete assembly!		09 21 064 2601	09 21 064 2701	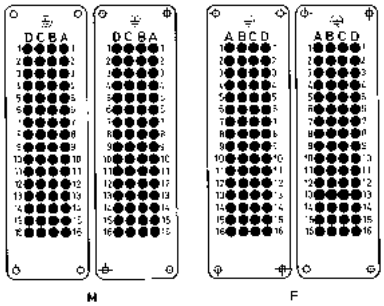 Contact arrangement (view from termination side) 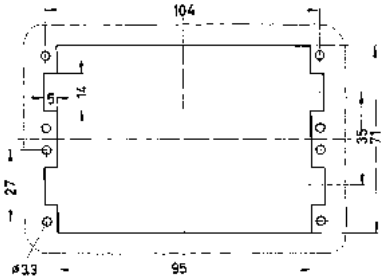 Panel cut out for use without Hoods/Housings

Technical characteristics

Contact resistance	≤3 mΩ
Material (contacts)	Copper alloy
Material (accessories)	Thermoplastic
RoHS	compliant with exemption, compliant
RoHS exemptions	**6c:** Copper alloy containing up to 4 % lead by weight

Specifications and approvals

EN 60664-1
IEC 61984

Details

Crimping tools see chapter 90

Remarks on the crimp technique

The wire gauges mentioned in the catalogue refer to geometric wire gauges of cables.

Coding pin

Use of the coding pin prevents incorrect mating to other connectors of the same type. The male pin should be omitted from the opposing cavity in the male insert.

Identification	Conductor cross-section (mm²)	Part number Male	Part number Female	Drawing (dimensions in mm)
Han D® , Crimp contact, Contact surface: Silver plated 	0,14 ... 0,37	09 15 000 6104	09 15 000 6204	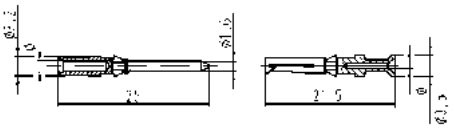
	0,5	09 15 000 6103	09 15 000 6203	
	0,75	09 15 000 6105	09 15 000 6205	
	1	09 15 000 6102	09 15 000 6202	
	1,5	09 15 000 6101	09 15 000 6201	
	2,5	09 15 000 6106	09 15 000 6206	
Han D® , Crimp contact, Contact surface: Gold plated 	0,14 ... 0,37	09 15 000 6124	09 15 000 6224	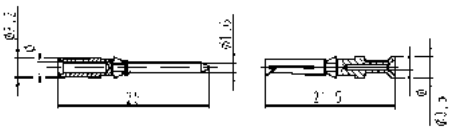
	0,5	09 15 000 6123	09 15 000 6223	
	0,75	09 15 000 6125	09 15 000 6225	
	1	09 15 000 6122	09 15 000 6222	
	1,5	09 15 000 6121	09 15 000 6221	
	2,5	09 15 000 6126	09 15 000 6226	

Wire gauge		⌀	Stripping length
0.14-0.37 mm²	AWG 26-22	0.9 mm	8 mm
0.5 mm²	AWG 20	1.1 mm	8 mm
0.75 mm²	AWG 18	1.3 mm	8 mm
1 mm²	AWG 18	1.45 mm	8 mm
1.5 mm²	AWG 16	1.75 mm	8 mm
2.5 mm²	AWG 14	2.25 mm	6 mm

Wire gauge		⌀	Stripping length
0.14-0.37 mm²	AWG 26-22	0.9 mm	8 mm
0.5 mm²	AWG 20	1.1 mm	8 mm
0.75 mm²	AWG 18	1.3 mm	8 mm
1 mm²	AWG 18	1.45 mm	8 mm
1.5 mm²	AWG 16	1.75 mm	8 mm
2.5 mm²	AWG 14	2.25 mm	6 mm

Identification	Conductor cross-section (mm²)	Part number Male	Part number Female	Drawing (dimensions in mm)
FO contact, for 1 mm plastic fibre 		20 10 001 3212 20 10 001 3213	20 10 001 3222	 20 10 001 3212 + 20 10 001 3222 for Han® 7 D, Han® 8 D, Han® 40 D, Han® 64 D, Han® 80 D, Han® 128 D 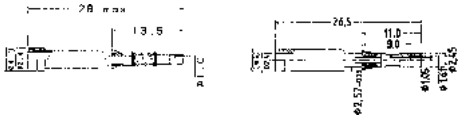 20 10 001 3213 + 20 10 001 3222 for Han® 15 D, Han® 25 D, Han® 50 D
Han D® Han DD® , Coding pin  Only for crimp termination With loss of one contact			09 33 000 9915	

Features

- High density of contacts
- for requirements up to 250 V / 10 A
- Time saving rapid termination by use of crimping contacts
- Gold and silver contacts available
- Suitable for thermo- and 1 mm FO contacts

Technical characteristics

Number of contacts	24, 42, 72, 108, 144, 216
Electrical data acc. to IEC 61984	10 A 250 V 4 kV 3
Rated current	10 A
Rated voltage	250 V
Rated impulse voltage	4 kV
Pollution degree	3
Rated voltage acc. to UL	600 V
Rated voltage acc. to CSA	600 V
Insulation resistance	≥10^{10} Ω
Limiting temperature	-40 ... +125 °C
Mating cycles	≥500
Material (insert)	Polycarbonate
Colour (insert)	RAL 7032 (pebble grey)
Material flammability class acc. to UL 94	V-0
RoHS	compliant

Derating

Current carrying capacity

The current carrying capacity of the connectors is limited by the thermal load capability of the contact element material including the connections and the insulating parts. The derating curve is therefore valid for currents which flow constantly (non-intermittent) through each contact element of the connector evenly, without exceeding the allowed maximum temperature.

Measuring and testing techniques acc. to IEC 60512-5-2

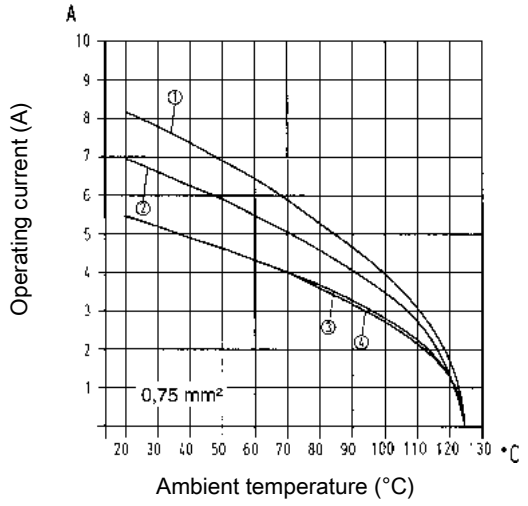

① Han® 24 DD
② Han® 42 DD
③ Han® 72 DD
④ Han® 108 DD

Derating

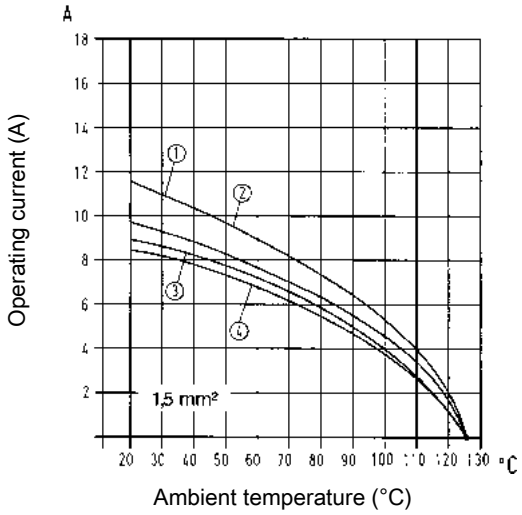

① Han® 24 DD
② Han® 42 DD
③ Han® 72 DD
④ Han® 108 DD

Specifications and approvals

EN 60664-1
IEC 61984
UL 1977 ECBT2.E235076
CSA-C22.2 No. 182.3 ECBT8.E235076
DNV GL

Details

Guide pins and bushes are recommended (see chapter 80).

Number of contacts

24+ ⏚

10 A 250 V 4 kV 3

Identification	Conductor cross-section (mm²)	Part number Male	Part number Female	Drawing (dimensions in mm)
Han DD® , Crimp termination  Please order crimp contacts separately.	0,14 ... 2,5	09 16 024 3001	09 16 024 3101	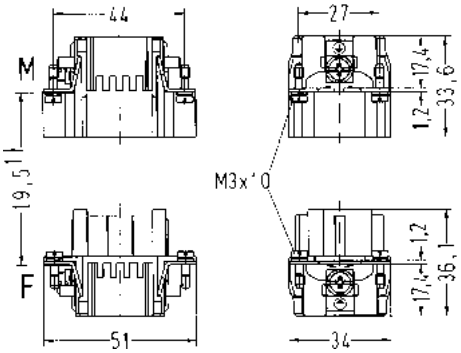 1) distance for contact max. 21 mm 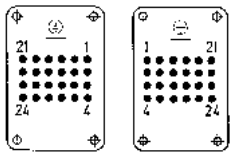 Contact arrangement (view from termination side) 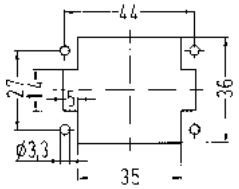 Panel cut out for use without Hoods/Housings

Number of contacts

42+ ⏚

10 A 250 V 4 kV 3

Identification	Conductor cross-section (mm²)	Part number Male	Part number Female	Drawing (dimensions in mm)
Han DD® , Crimp termination  Please order crimp contacts separately.	0,14 ... 2,5	09 16 042 3001	09 16 042 3101	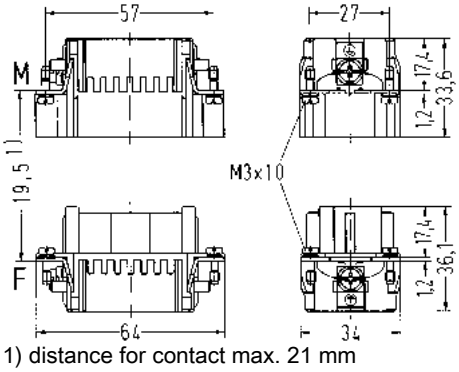 1) distance for contact max. 21 mm 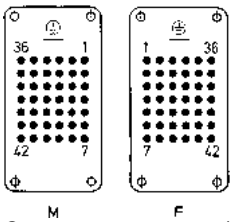 Contact arrangement (view from termination side) 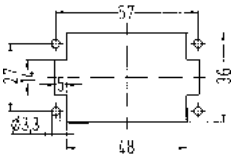 Panel cut out for use without Hoods/Housings

Number of contacts

72+ ⏚

10 A 250 V 4 kV 3

Identification	Conductor cross-section (mm²)	Part number Male	Part number Female	Drawing (dimensions in mm)
Han DD® , Crimp termination  Please order crimp contacts separately.	0,14 ... 2,5	09 16 072 3001	09 16 072 3101	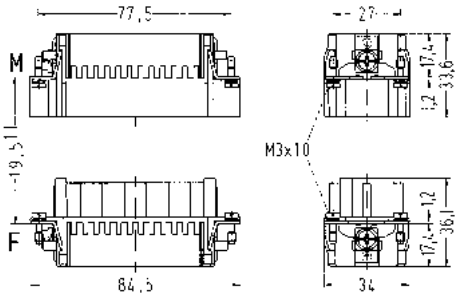 1) distance for contact max. 21 mm 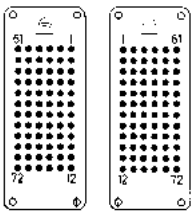 Contact arrangement (view from termination side) 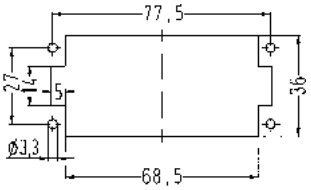 Panel cut out for use without Hoods/Housings

Number of contacts

108+ ⏚

10 A 250 V 4 kV 3

Identification	Conductor cross-section (mm²)	Part number Male	Part number Female	Drawing (dimensions in mm)
Han DD® , Crimp termination  Please order crimp contacts separately.	0,14 ... 2,5	09 16 108 3001	09 16 108 3101	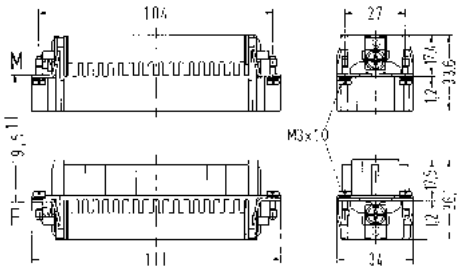 1) distance for contact max. 21 mm 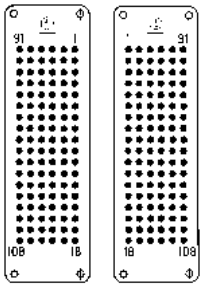 Contact arrangement (view from termination side) 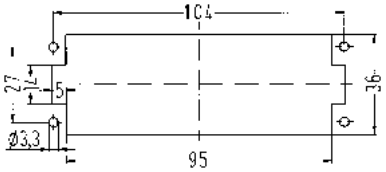 Panel cut out for use without Hoods/Housings

Number of contacts

144+ ⏚

10 A 250 V 4 kV 3

Identification	Conductor cross-section (mm²)	Part number Male	Part number Female	Drawing (dimensions in mm)
Han DD® , Crimp termination, 1 ... 72  Please order crimp contacts separately. You need two inserts for a complete assembly!	0,14 ... 2,5	09 16 072 3001	09 16 072 3101	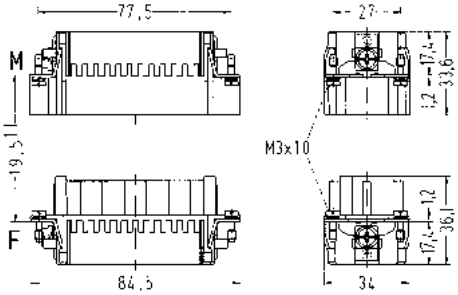 1) distance for contact max. 21 mm
Han DD® , Continuing marking, Crimp termination, 73 ... 144  Please order crimp contacts separately. You need two inserts for a complete assembly!	0,14 ... 2,5	09 16 072 3011	09 16 072 3111	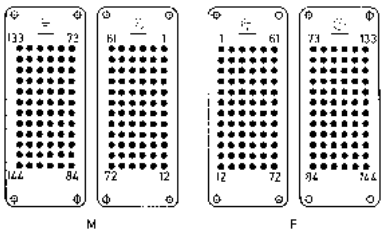 Contact arrangement (view from termination side) 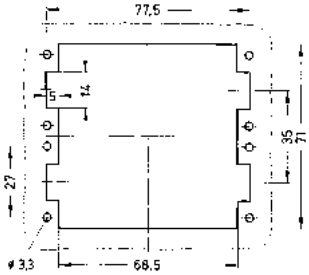 Panel cut out for use without Hoods/Housings

Number of contacts

216+ ⏚

10 A 250 V 4 kV 3

Identification	Conductor cross-section (mm²)	Part number Male	Part number Female	Drawing (dimensions in mm)
Han DD® , Crimp termination, 1 ... 108  Please order crimp contacts separately. You need two inserts for a complete assembly!	0,14 ... 2,5	09 16 108 3001	09 16 108 3101	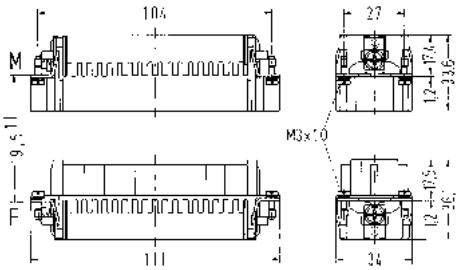 1) distance for contact max. 21 mm
Han DD® , Continuing marking, Crimp termination, 109 ... 216  Please order crimp contacts separately. You need two inserts for a complete assembly!	0,14 ... 2,5	09 16 108 3011	09 16 108 3111	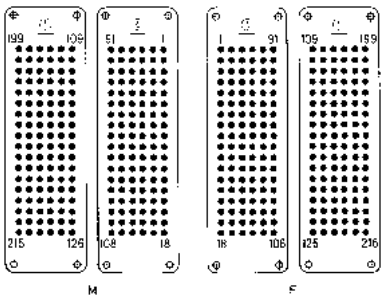 Contact arrangement (view from termination side) 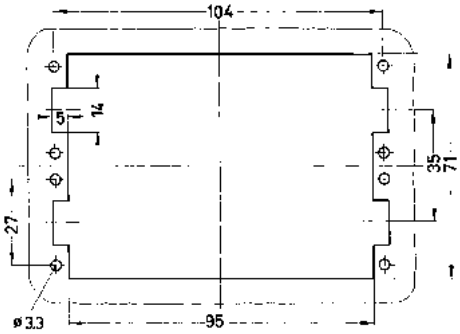 Panel cut out for use without Hoods/Housings

Technical characteristics

Contact resistance	≤3 mΩ
Material (contacts)	Copper alloy
Material (accessories)	Thermoplastic
RoHS	compliant with exemption, compliant
RoHS exemptions	**6c:** Copper alloy containing up to 4 % lead by weight

Specifications and approvals

EN 60664-1
IEC 61984

Details

Crimping tools see chapter 90

Remarks on the crimp technique

The wire gauges mentioned in the catalogue refer to geometric wire gauges of cables.

Coding pin

Use of the coding pin prevents incorrect mating to other connectors of the same type. The male pin should be omitted from the opposing cavity in the male insert.

Identification	Conductor cross-section (mm²)	Part number Male	Part number Female	Drawing (dimensions in mm)
Han D® , Crimp contact, Contact surface: Silver plated 	0,14 ... 0,37	09 15 000 6104	09 15 000 6204	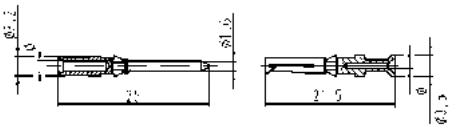
	0,5	09 15 000 6103	09 15 000 6203	
	0,75	09 15 000 6105	09 15 000 6205	
	1	09 15 000 6102	09 15 000 6202	
	1,5	09 15 000 6101	09 15 000 6201	
	2,5	09 15 000 6106	09 15 000 6206	
Han D® , Crimp contact, Contact surface: Gold plated 	0,14 ... 0,37	09 15 000 6124	09 15 000 6224	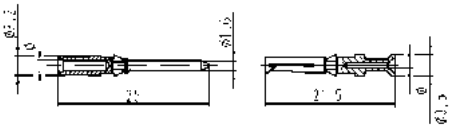
	0,5	09 15 000 6123	09 15 000 6223	
	0,75	09 15 000 6125	09 15 000 6225	
	1	09 15 000 6122	09 15 000 6222	
	1,5	09 15 000 6121	09 15 000 6221	
	2,5	09 15 000 6126	09 15 000 6226	
FO contact, for 1 mm plastic fibre 		20 10 001 3211	20 10 001 3221	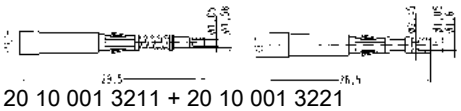 20 10 001 3211 + 20 10 001 3221

Wire gauge		⌀	Stripping length
0.14-0.37 mm²	AWG 26-22	0.9 mm	8 mm
0.5 mm²	AWG 20	1.1 mm	8 mm
0.75 mm²	AWG 18	1.3 mm	8 mm
1 mm²	AWG 18	1.45 mm	8 mm
1.5 mm²	AWG 16	1.75 mm	8 mm
2.5 mm²	AWG 14	2.25 mm	6 mm

Wire gauge		⌀	Stripping length
0.14-0.37 mm²	AWG 26-22	0.9 mm	8 mm
0.5 mm²	AWG 20	1.1 mm	8 mm
0.75 mm²	AWG 18	1.3 mm	8 mm
1 mm²	AWG 18	1.45 mm	8 mm
1.5 mm²	AWG 16	1.75 mm	8 mm
2.5 mm²	AWG 14	2.25 mm	6 mm

Identification	Conductor cross-section (mm²)	Part number Male	Part number Female	Drawing (dimensions in mm)
Han D® Han DD® , Coding pin  Only for crimp termination With loss of one contact			09 33 000 9915	

Modified contact arrangement

Modified contact arrangement

The connector series Han DD® and Han D® equipped with all contacts may be used for voltages up to 250 V, pollution degree 3. A modified contact loading arrangement permits use up to 500 V also in the same pollution degree.

According to DIN EN 61 984 connectors should not be coupled or decoupled under electrical load.

Series Han DD®

10 A 400 V 6 kV 3

Rated current	10 A
Rated voltage	400 V
Rated impulse voltage	6 kV
Pollution degree	3

10 A 500 V 6 kV 3

Rated current	10 A
Rated voltage	500 V
Rated impulse voltage	6 kV
Pollution degree	3

Contact arrangement view from termination side

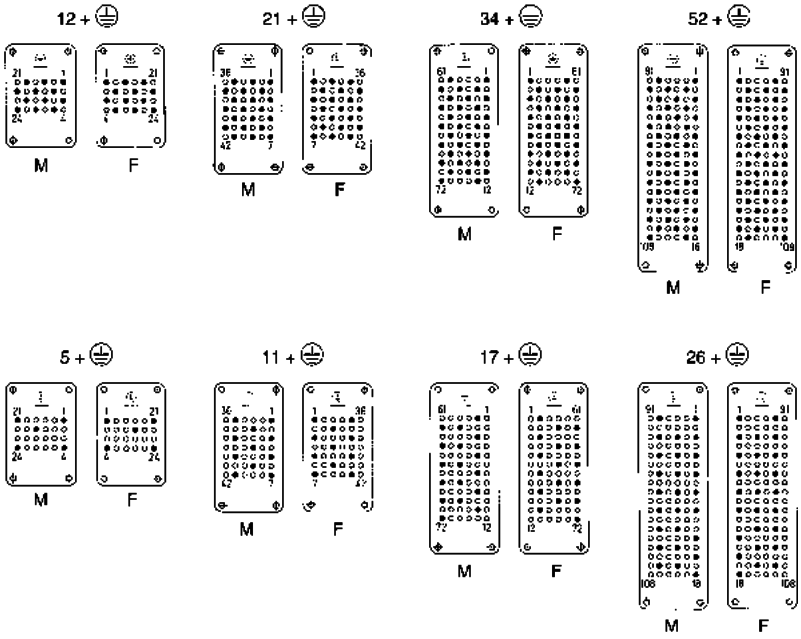

● Working contact ○ Without contact M - Male insert F - Female insert

Series Han D®

10 A 500 V 6 kV 3

Rated current	10 A
Rated voltage	500 V
Rated impulse voltage	6 kV
Pollution degree	3

Contact arrangement view from termination side

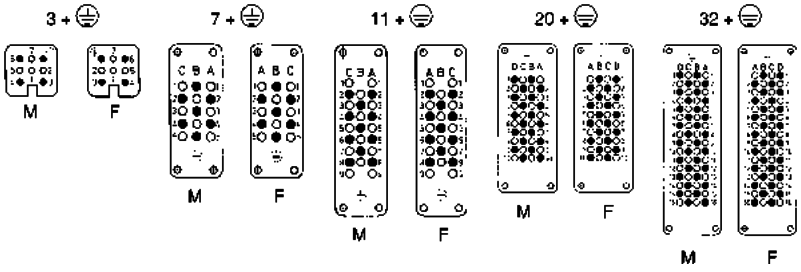

● Working contact ○ Without contact M - Male insert F - Female insert

Contents	Page
Han E®	**03.3**
Han® ES/ES Press/ESS	**03.12**
Han® ES Press plug-in jumpers	**03.28**
Han® EE	**03.30**
Han® EEE	**03.37**
Contacts	**03.40**

Modified contact arrangement Han® EE

The connector series Han® EE equipped with all contacts may be used for voltages up to 500 V ~ pollution degree 3. A modified contact loading arrangement permits use up to 1000 V ~ pollution degree also in pollution degree 3. Fully equipped connectors may also be used up to 1000 V ~ but in a lower pollution degree. See chapter 00. According to IEC 61984 connectors should not be coupled or decoupled under electrical load.

690 V Pollution degree 3

Contact arrangement view from termination side

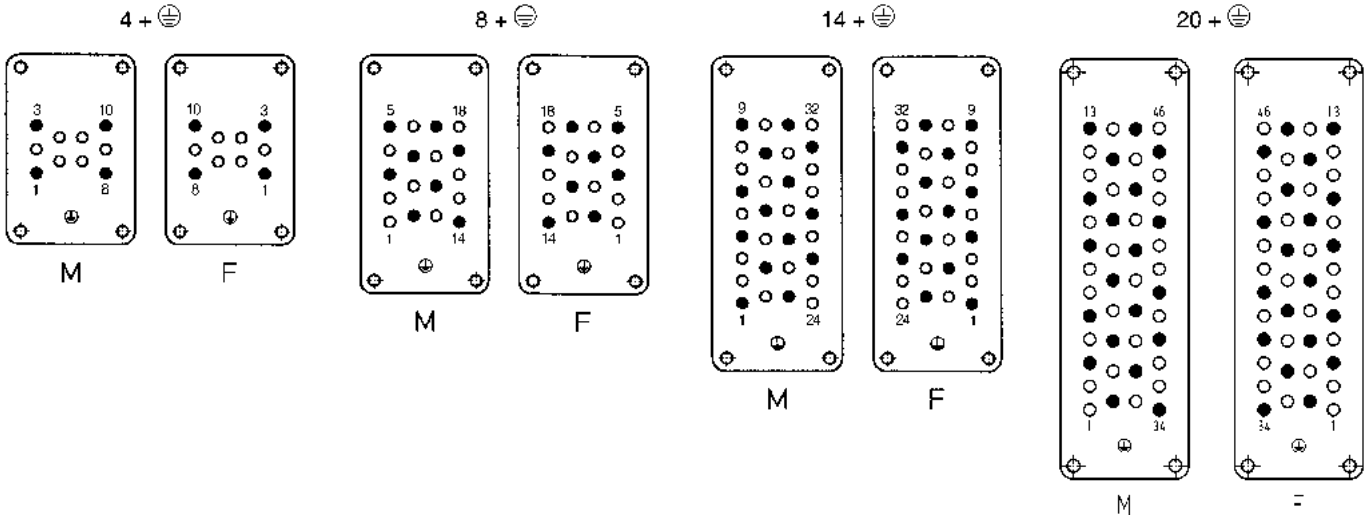

● Working contact ○ Without contact M - Male insert F - Female insert

1000 V Pollution degree 3

Contact arrangement view from termination side

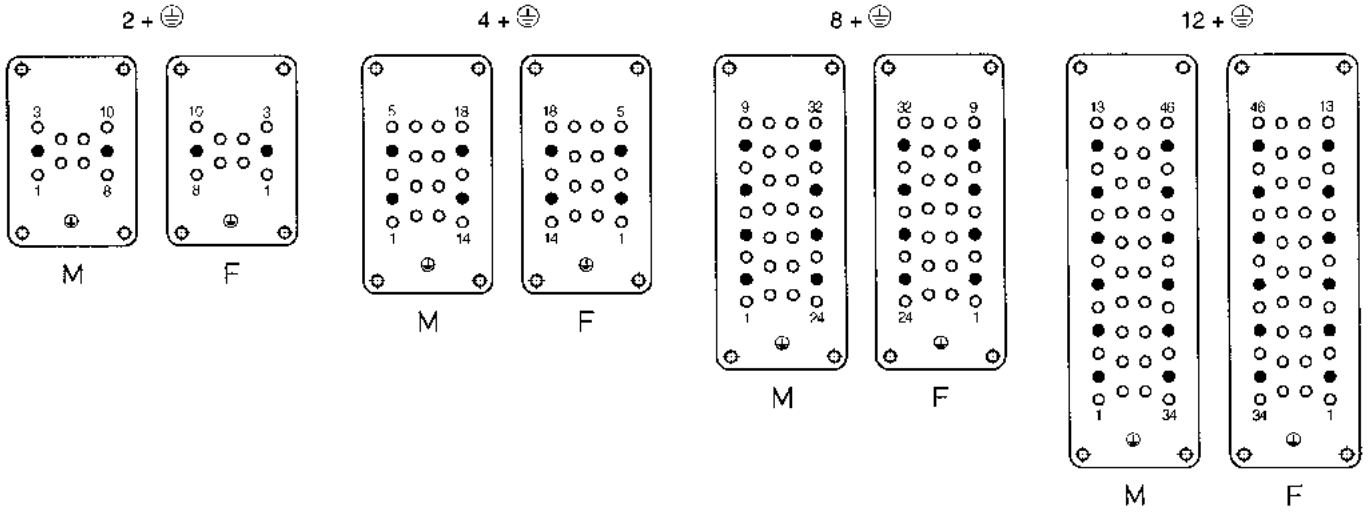

● Working contact ○ Without contact M - Male insert F - Female insert

Features

- Covers a wide range of cross-sections
- Screw termination with wire protection

Technical characteristics

Number of contacts	6, 10, 16, 24, 32, 48
Electrical data acc. to IEC 61984	16 A 500 V 6 kV 3
Rated current	16 A
Rated voltage	500 V
Rated impulse voltage	6 kV
Pollution degree	3
Rated voltage acc. to UL	600 V
Rated voltage acc. to CSA	600 V
Insulation resistance	≥10^{10} Ω
Contact resistance	≤1 mΩ
Limiting temperature	-40 ... +125 °C
Mating cycles	≥500
Material (insert)	Polycarbonate
Colour (insert)	RAL 7032 (pebble grey)
Material (contacts)	Copper alloy
RoHS	compliant, compliant with exemption
RoHS exemptions	**6c:** Copper alloy containing up to 4 % lead by weight

Derating

Current carrying capacity

The current carrying capacity of the connectors is limited by the thermal load capability of the contact element material including the connections and the insulating parts. The derating curve is therefore valid for currents which flow constantly (non-intermittent) through each contact element of the connector evenly, without exceeding the allowed maximum temperature.

Measuring and testing techniques acc. to IEC 60512-5-2

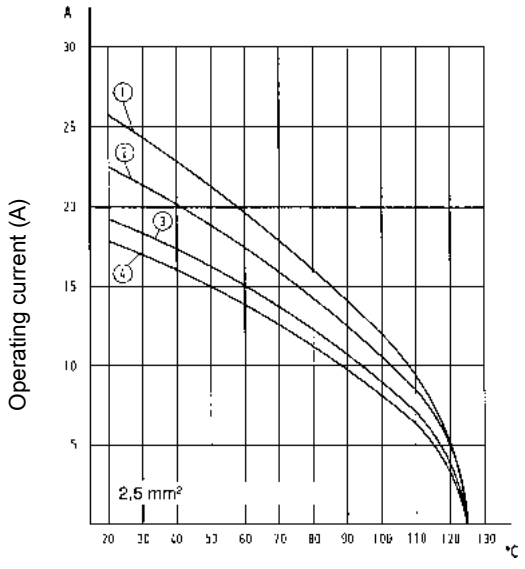

Ambient temperature (°C)

① Han® 6 E
② Han® 10 E
③ Han® 16 E Han® 32 E
④ Han® 24 E Han® 48 E

Derating

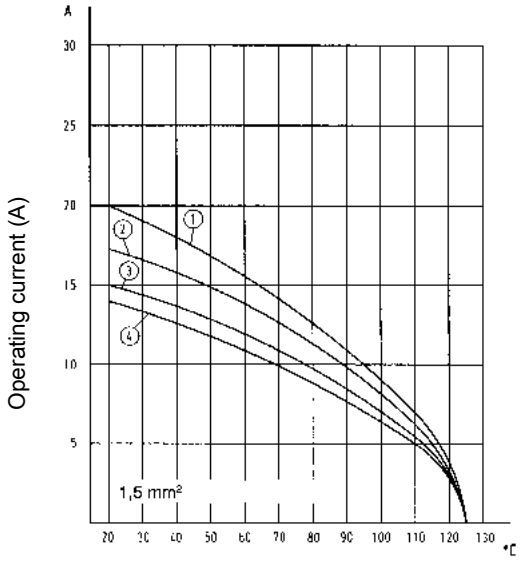

Ambient temperature (°C)

① Han® 6 E
② Han® 10 E
③ Han® 16 E Han® 32 E
④ Han® 24 E Han® 48 E

Specifications and approvals

EN 60664-1
IEC 61984
UL 1977 ECBT2.E235076
UL 2237 PVVA2.E318390
CSA-C22.2 No. 182.3 PVVA8.E318390
DNV GL

Details

Internal use in the switch cabinet in conjunction with Han-Snap® (see chapter 11)

Suitable for hoods/housings of series Han® B, Han® M, Han® EMC, Han® HPR, Han® Easy Hood (see chapter 31)

Tightening torque 0.5 Nm

Tightening torque PE screw 1.2 Nm

Number of contacts

6+ ⏚

16 A 500 V 6 kV 3

Identification	Conductor cross-section (mm²)	Part number Male	Part number Female	Drawing (dimensions in mm)
Han E® , Crimp termination 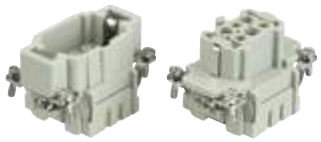 Please order crimp contacts separately.	0,14 ... 4	09 33 006 2602	09 33 006 2702	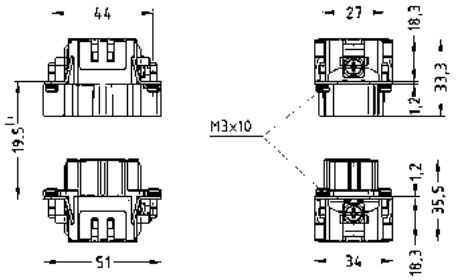 1) distance for contact max. 21 mm
Han E® , Screw termination, With wire protection, Contact surface: Silver plated 	0,75 ... 2,5	09 33 006 2601	09 33 006 2701	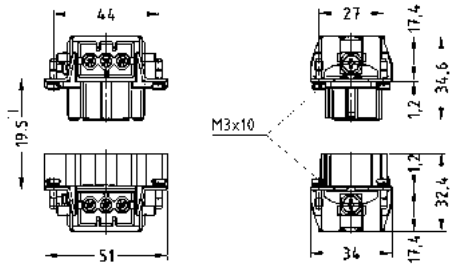 1) distance for contact max. 21 mm 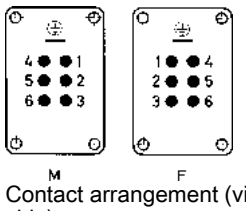 Contact arrangement (view from termination side) 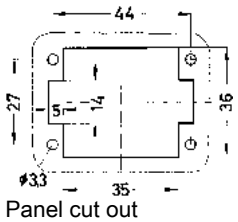 Panel cut out

Number of contacts

10+ ⏚

16 A 500 V 6 kV 3

Identification	Conductor cross-section (mm²)	Part number Male	Part number Female	Drawing (dimensions in mm)
Han E® , Crimp termination  Please order crimp contacts separately.	0,14 ... 4	09 33 010 2602	09 33 010 2702	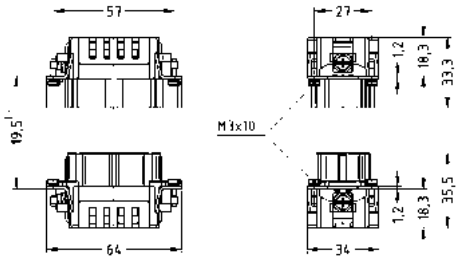 1) distance for contact max. 21 mm
Han E® , Screw termination, With wire protection, Contact surface: Silver plated 	0,75 ... 2,5	09 33 010 2601	09 33 010 2701	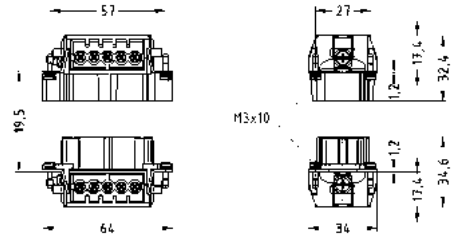 1) distance for contact max. 21 mm 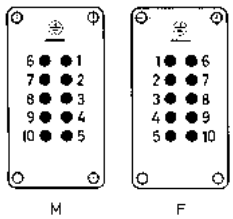 Contact arrangement (view from termination side) 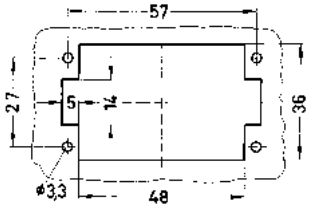 Panel cut out

Number of contacts

16+ ⏚

16 A 500 V 6 kV 3

Identification	Conductor cross-section (mm²)	Part number Male	Part number Female	Drawing (dimensions in mm)
Han E® , Crimp termination  Please order crimp contacts separately.	0,14 ... 4	09 33 016 2602	09 33 016 2702	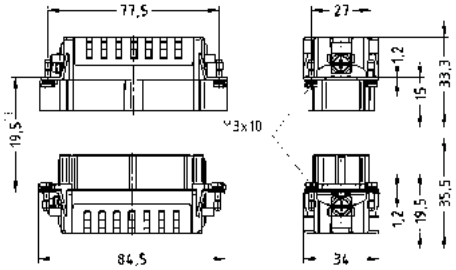 1) distance for contact max. 21 mm
Han E® , Screw termination, With wire protection, Contact surface: Silver plated 	0,75 ... 2,5	09 33 016 2601	09 33 016 2701	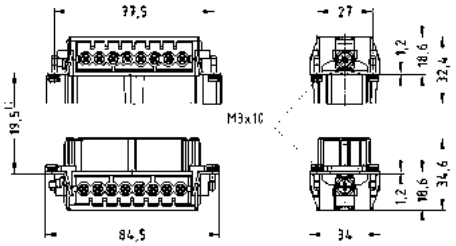 1) distance for contact max. 21 mm 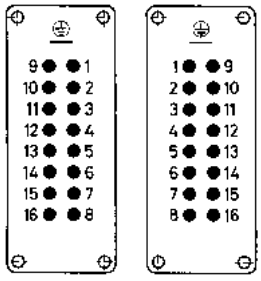 Contact arrangement (view from termination side) 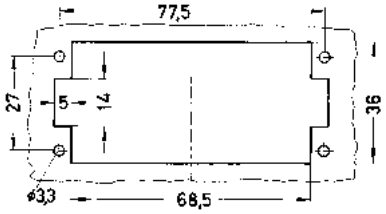 Panel cut out

Number of contacts

24+ ⏚

16 A 500 V 6 kV 3

Identification	Conductor cross-section (mm²)	Part number Male	Part number Female	Drawing (dimensions in mm)
Han E® , Crimp termination 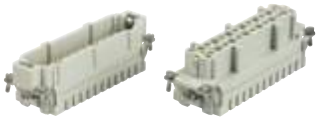 Please order crimp contacts separately.	0,14 ... 4	09 33 024 2602	09 33 024 2702	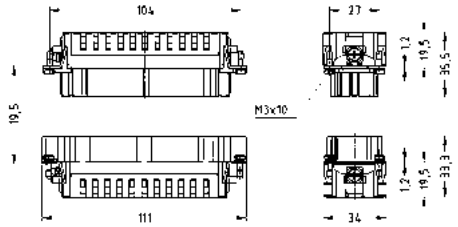 1) distance for contact max. 21 mm
Han E® , Screw termination, With wire protection, Contact surface: Silver plated 	0,75 ... 2,5	09 33 024 2601	09 33 024 2701	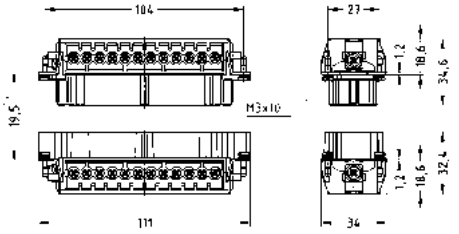 1) distance for contact max. 21 mm 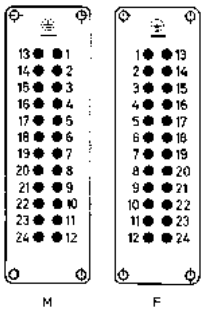 Contact arrangement (view from termination side) 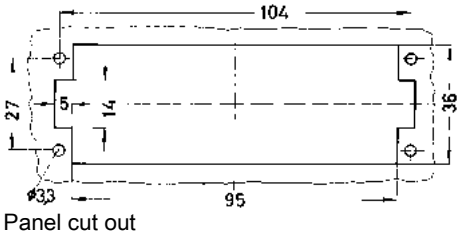 Panel cut out

Number of contacts

32+ ⏚

16 A 500 V 6 kV 3

Identification	Conductor cross-section (mm²)	Part number Male	Part number Female	Drawing (dimensions in mm)
Han E® , Crimp termination, 1 ... 16 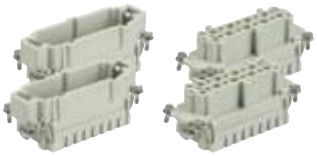 Please order crimp contacts separately. You need two inserts for a complete assembly!	0,14 ... 4	09 33 016 2602	09 33 016 2702	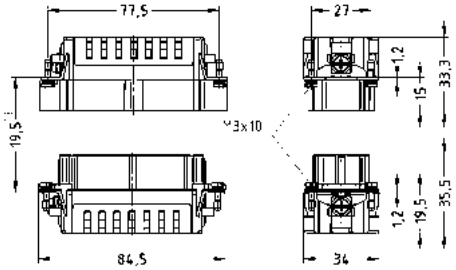 1) distance for contact max. 21 mm
Han E® , Continuing marking, Crimp termination, 17 ... 32 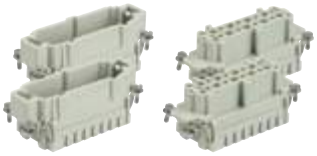 Please order crimp contacts separately. You need two inserts for a complete assembly!	0,14 ... 4	09 33 016 2612	09 33 016 2712	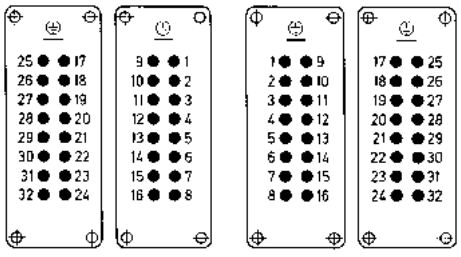 Contact arrangement (view from termination side) 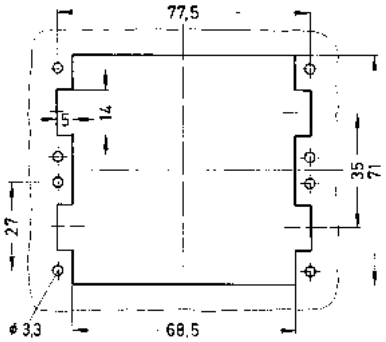 Panel cut out

Identification	Conductor cross-section (mm²)	Part number Male	Part number Female	Drawing (dimensions in mm)
Han E® , Screw termination, With wire protection, 1 ... 16 Contact surface: Silver plated 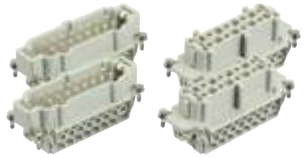 You need two inserts for a complete assembly!	0,75 ... 2,5	09 33 016 2601	09 33 016 2701	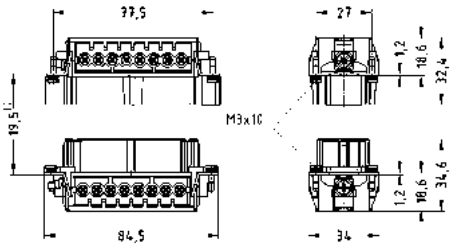 1) distance for contact max. 21 mm
Han E® , Continuing marking, Screw termination, With wire protection, 17 ... 32 Contact surface: Silver plated 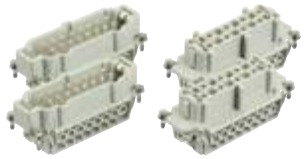 You need two inserts for a complete assembly!	0,75 ... 2,5	09 33 016 2611	09 33 016 2711	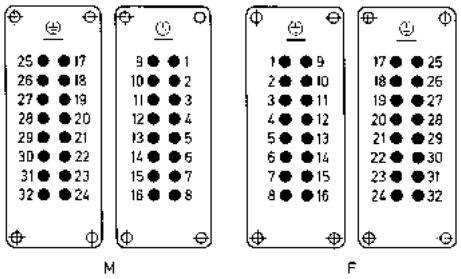 Contact arrangement (view from termination side) 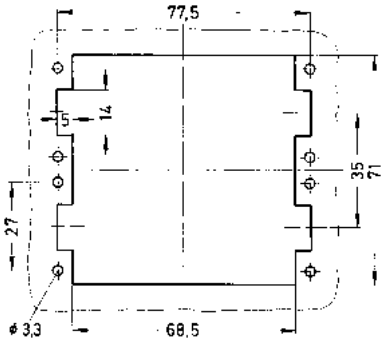 Panel cut out

Number of contacts

48+ ⏚

16 A 500 V 6 kV 3

Identification	Conductor cross-section (mm²)	Part number Male	Part number Female	Drawing (dimensions in mm)
Han E® , Crimp termination, 1 ... 24 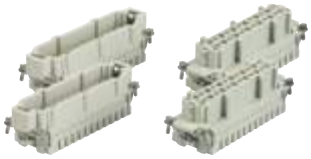 Please order crimp contacts separately. You need two inserts for a complete assembly!	0,14 ... 4	09 33 024 2602	09 33 024 2702	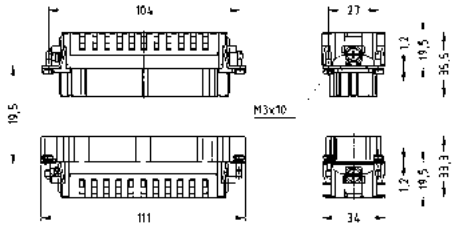 1) distance for contact max. 21 mm
Han E® , Continuing marking, Crimp termination, 25 ... 48 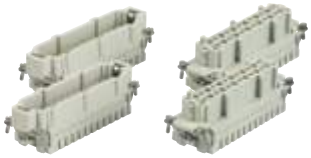 Please order crimp contacts separately. You need two inserts for a complete assembly!	0,14 ... 4	09 33 024 2612	09 33 024 2712	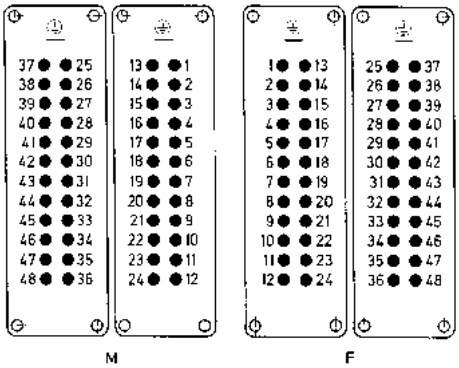 M F Contact arrangement (view from termination side) 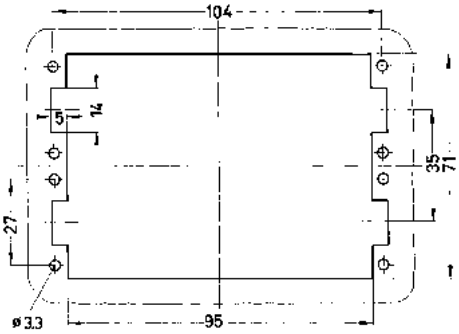 Panel cut out

Identification	Conductor cross-section (mm²)	Part number Male	Part number Female	Drawing (dimensions in mm)
Han E® , Screw termination, With wire protection, 1 ... 24 Contact surface: Silver plated 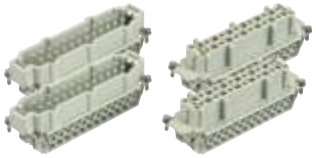 You need two inserts for a complete assembly!	0,75 ... 2,5	09 33 024 2601	09 33 024 2701	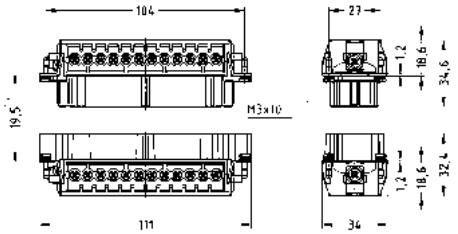 1) distance for contact max. 21 mm
Han E® , Continuing marking, Screw termination, With wire protection, 25 ... 48 Contact surface: Silver plated 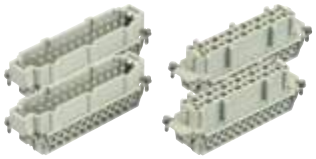 You need two inserts for a complete assembly!	0,75 ... 2,5	09 33 024 2611	09 33 024 2711	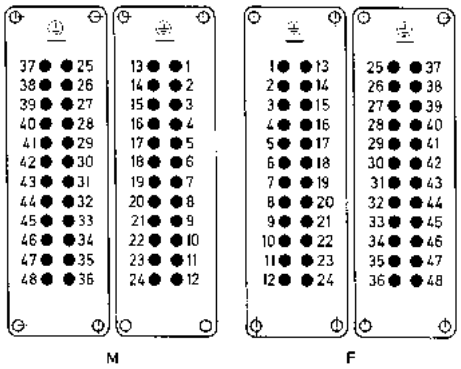 M F Contact arrangement (view from termination side) 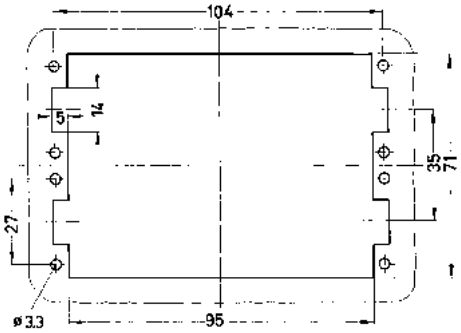 Panel cut out

Features

- Rapid termination technology without tools for a time saving assembly and for optimal processreliability
- Vibration-proved
- Han® ES Press: Easy bridging functionality of contacts by means of plug-in jumpers directly on the connector
- Han® ES Press: Fast realisation of potential multiplication as well as star and delta bridges
- Han® ESS: two termination points per contact

Technical characteristics

Number of contacts	6, 10, 16, 24, 32, 48
Electrical data acc. to IEC 61984	16 A 500 V 6 kV 3
Rated current	16 A
Rated voltage	500 V
Rated impulse voltage	6 kV
Pollution degree	3
Rated voltage acc. to UL	600 V
Rated voltage acc. to CSA	600 V
Insulation resistance	≥10^{10} Ω
Contact resistance	≤3 mΩ
Limiting temperature	-40 ... +125 °C
Mating cycles	≥500
Material (insert)	Polycarbonate
Colour (insert)	RAL 7032 (pebble grey)
Material (contacts)	Copper alloy
Material flammability class acc. to UL 94	V-0
RoHS	compliant with exemption, compliant
RoHS exemptions	**6c:** Copper alloy containing up to 4 % lead by weight

Derating

Current carrying capacity

The current carrying capacity of the connectors is limited by the thermal load capability of the contact element material including the connections and the insulating parts. The derating curve is therefore valid for currents which flow constantly (non-intermittent) through each contact element of the connector evenly, without exceeding the allowed maximum temperature.

Measuring and testing techniques acc. to IEC 60512-5-2

Han® ES

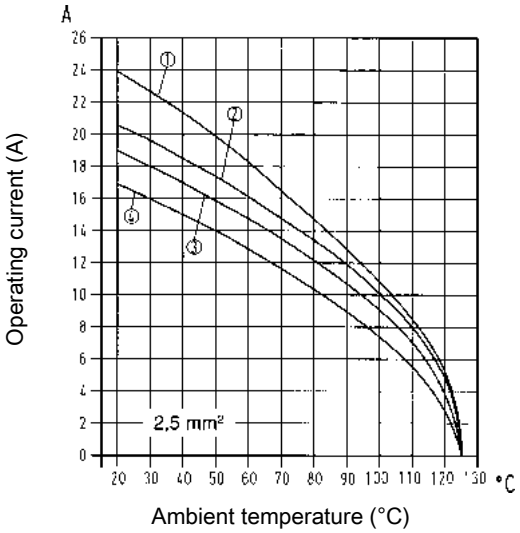

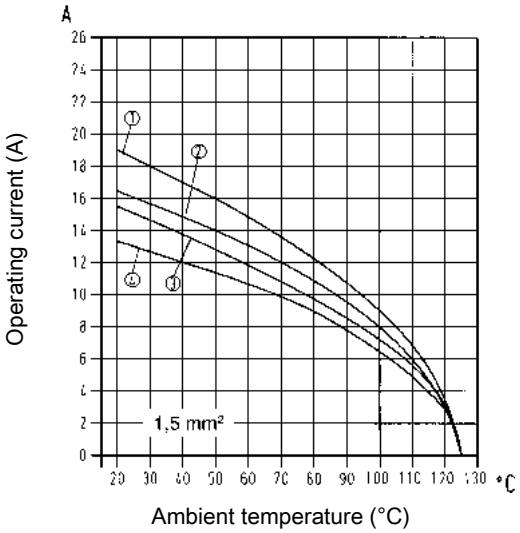

① Han® 6 ES
② Han® 10 ES
③ Han® 16 ES Han® 32 ES
④ Han® 24 ES Han® 48 ES

Derating

Han® ES Press

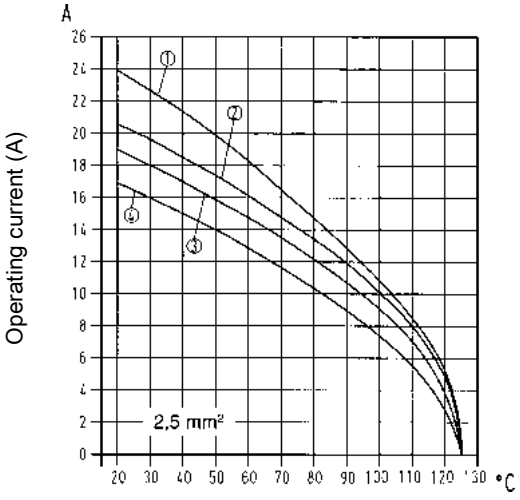

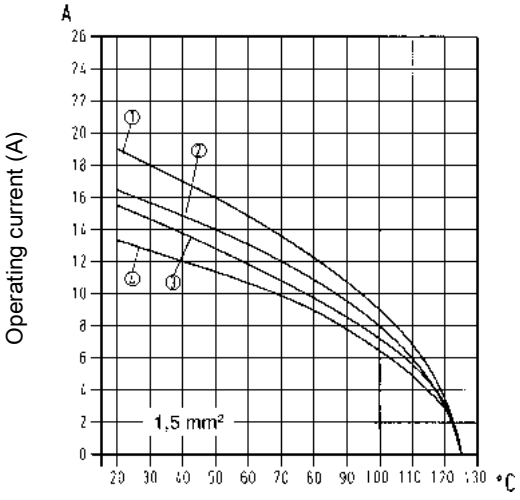

① Han® 6 ES Press
② Han® 10 ES Press
③ Han® 16 ES Press Han® 32 ES Press
④ Han® 24 ES Press Han® 48 ES Press

Derating

Han® ESS

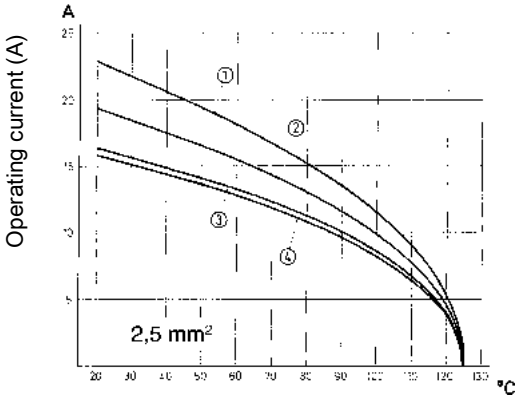

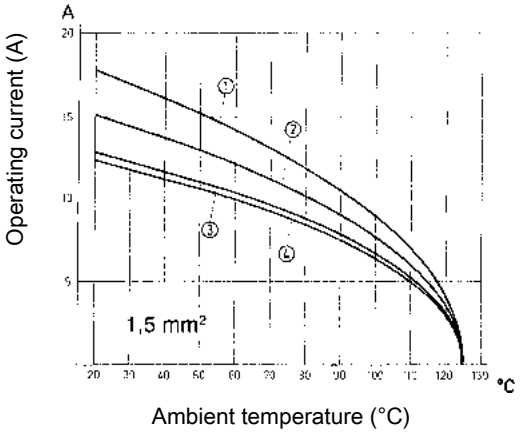

① Han® 6 ESS
② Han® 10 ESS
③ Han® 16 ESS Han® 32 ESS
④ Han® 24 ESS Han® 48 ESS

Specifications and approvals

EN 60664-1
IEC 61984
UL 1977 ECBT2.E235076
UL 2237 PVVA2.E318390
CSA-C22.2 No. 182.3 PVVA8.E318390
DNV GL
CSA-C22.2 No. 182.3 ECBT8.E235076

Details

Internal use in the switch cabinet in conjunction with Han-Snap® (see chapter 11)

Suitable for hoods/housings of series Han® B, Han® M, Han® EMC, Han® HPR, Han® Easy Hood (see chapter 31)

Tightening torque 0.5 Nm

Tightening torque PE screw 1.2 Nm

Number of contacts

6+ ⏚

16 A 500 V 6 kV 3

Identification	Conductor cross-section (mm²)	Part number Male	Part number Female	Drawing (dimensions in mm)
Han® ES , Cage-clamp termination, Contact surface: Silver plated 	0,14 ... 2,5	09 33 006 2616	09 33 006 2716	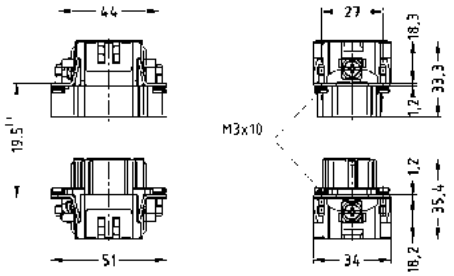 1) distance for contact max. 21 mm
Han® ES Press , Cage-clamp termination, Contact surface: Silver plated  Blue slide for hoods/housings high construction only	0,14 ... 2,5	09 33 006 2648	09 33 006 2748	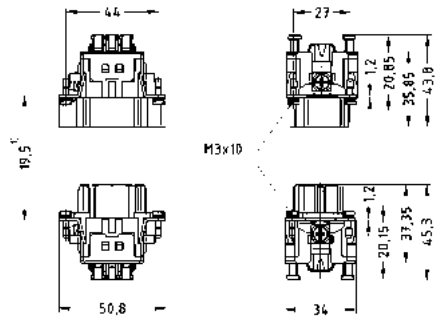 Distance for contact max. 21 mm 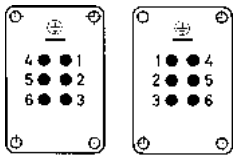 M F Contact arrangement (view from termination side) 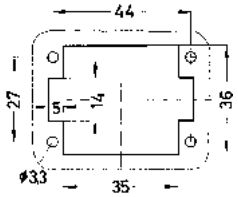 Panel cut out

Identification	Conductor cross-section (mm²)	Part number Male	Part number Female	Drawing (dimensions in mm)
Han® ESS , Cage-clamp termination, Contact surface: Silver plated 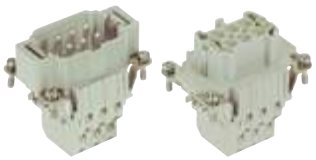 two terminations per contact for hoods/housings high construction only	0,14 ... 2,5	09 33 006 2672	09 33 006 2772	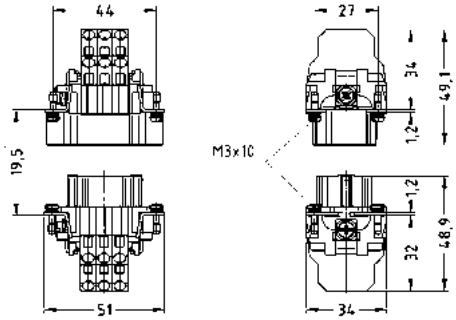 1) distance for contact max. 21 mm 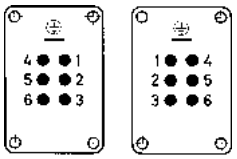 Contact arrangement (view from termination side) 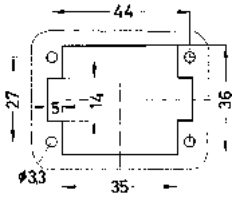 Panel cut out

Number of contacts

10+ ⏚

16 A 500 V 6 kV 3

Identification	Conductor cross-section (mm²)	Part number Male	Part number Female	Drawing (dimensions in mm)
Han® ES , Cage-clamp termination, Contact surface: Silver plated 	0,14 ... 2,5	09 33 010 2616	09 33 010 2716	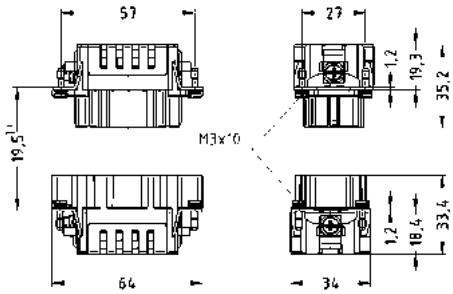 1) distance for contact max. 21 mm
Han® ES Press , Cage-clamp termination, Contact surface: Silver plated  Blue slide for hoods/housings high construction only	0,14 ... 2,5	09 33 010 2648	09 33 010 2748	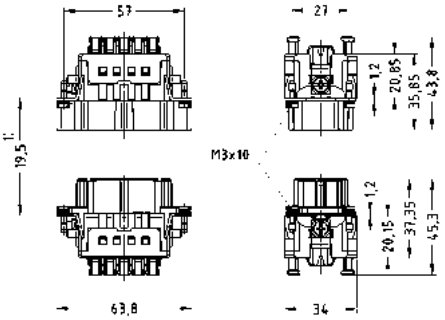 Distance for contact max. 21 mm 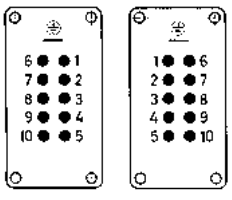 Contact arrangement (view from termination side) 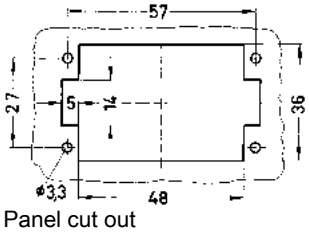 Panel cut out

Identification	Conductor cross-section (mm²)	Part number Male	Part number Female	Drawing (dimensions in mm)
Han® ESS , Cage-clamp termination, Contact surface: Silver plated  two terminations per contact for hoods/housings high construction only	0,14 ... 2,5	09 33 010 2672	09 33 010 2772	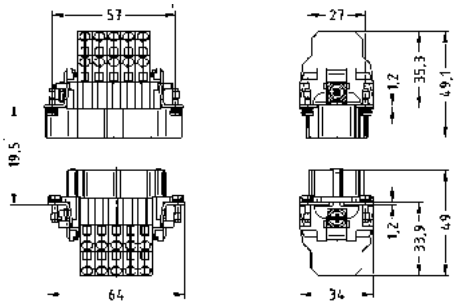 1) distance for contact max. 21 mm 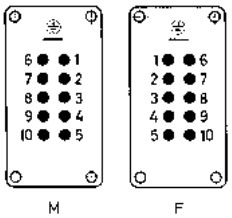 Contact arrangement (view from termination side) 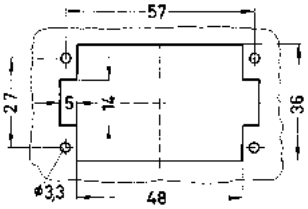 Panel cut out

Number of contacts

16+ ⏚

16 A 500 V 6 kV 3

Identification	Conductor cross-section (mm²)	Part number Male	Part number Female	Drawing (dimensions in mm)
Han® ES , Cage-clamp termination, Contact surface: Silver plated 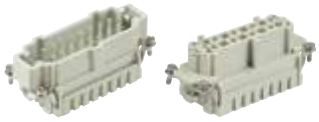	0,14 ... 2,5	09 33 016 2616	09 33 016 2716	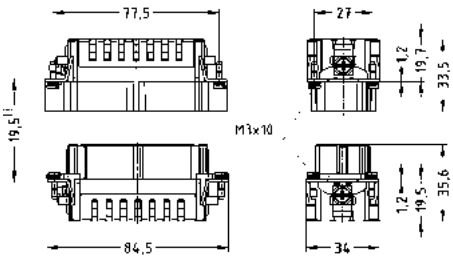 1) distance for contact max. 21 mm
Han® ES Press , Cage-clamp termination, Contact surface: Silver plated  Blue slide for hoods/housings high construction only	0,14 ... 2,5	09 33 016 2648	09 33 016 2748	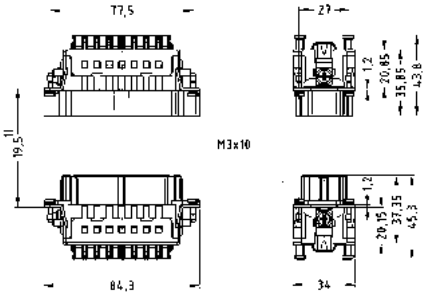 Distance for contact max. 21 mm 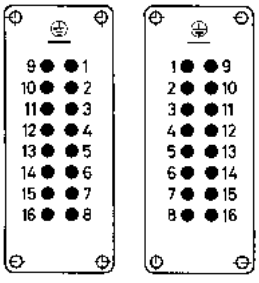 Contact arrangement (view from termination side) 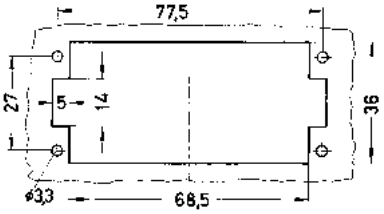 Panel cut out

Identification	Conductor cross-section (mm²)	Part number Male	Part number Female	Drawing (dimensions in mm)
Han® ESS , Cage-clamp termination, Contact surface: Silver plated  two terminations per contact for hoods/housings high construction only	0,14 ... 2,5	09 33 016 2672	09 33 016 2772	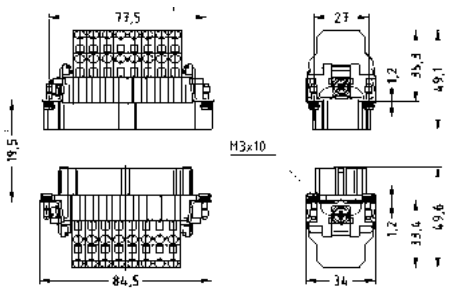 1) distance for contact max. 21 mm 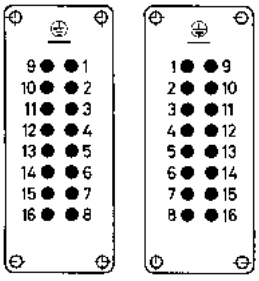 M F Contact arrangement (view from termination side) 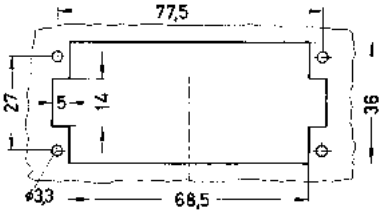 Panel cut out

Number of contacts

24+ ⏚

16 A 500 V 6 kV 3

Identification	Conductor cross-section (mm²)	Part number Male	Part number Female	Drawing (dimensions in mm)
Han® ES , Cage-clamp termination, Contact surface: Silver plated 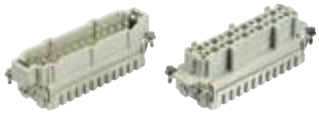	0,14 ... 2,5	09 33 024 2616	09 33 024 2716	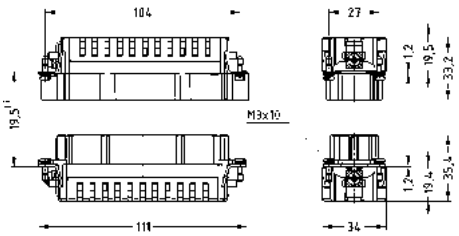 1) distance for contact max. 21 mm
Han® ES Press , Cage-clamp termination, Contact surface: Silver plated  Blue slide for hoods/housings high construction only	0,14 ... 2,5	09 33 024 2648	09 33 024 2748	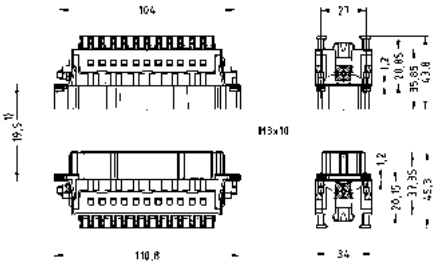 Distance for contact max. 21 mm 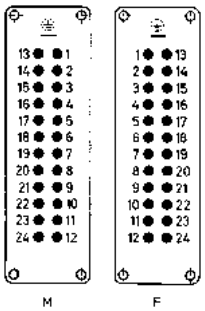 Contact arrangement (view from termination side) 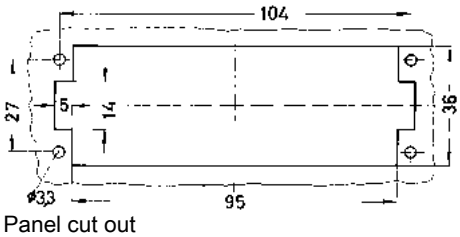 Panel cut out

Identification	Conductor cross-section (mm²)	Part number Male	Part number Female	Drawing (dimensions in mm)
Han® ESS , Cage-clamp termination, Contact surface: Silver plated 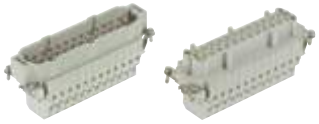 two terminations per contact for hoods/housings high construction only	0,14 ... 2,5	09 33 024 2672	09 33 024 2772	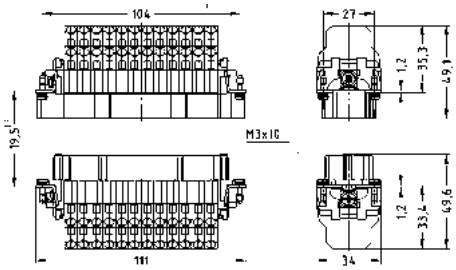 1) distance for contact max. 21 mm 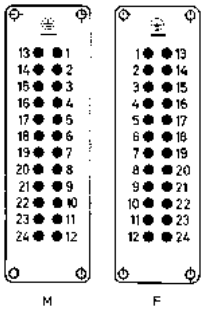 Contact arrangement (view from termination side) 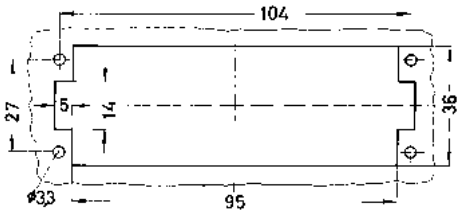 Panel cut out

Number of contacts

32+ ⏚

16 A 500 V 6 kV 3

Identification	Conductor cross-section (mm²)	Part number Male	Part number Female	Drawing (dimensions in mm)
Han® ES , Cage-clamp termination, 1 ... 16 Contact surface: Silver plated 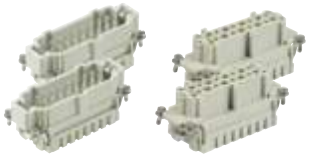 You need two inserts for a complete assembly!	0,14 ... 2,5	09 33 016 2616	09 33 016 2716	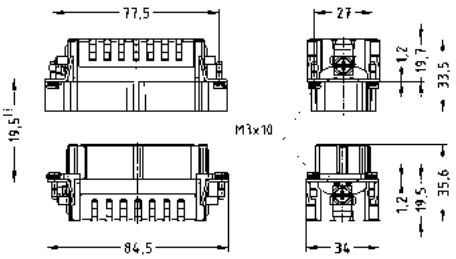 1) distance for contact max. 21 mm
Han® ES , Continuing marking, Cage-clamp termination, 17 ... 32 Contact surface: Silver plated 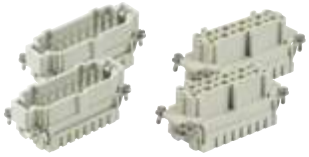 You need two inserts for a complete assembly!	0,14 ... 2,5	09 33 016 2626	09 33 016 2726	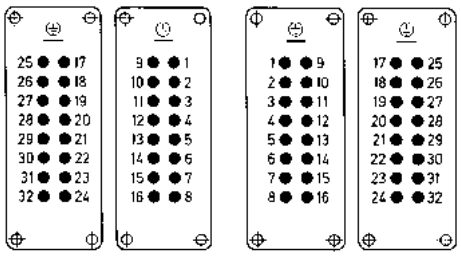 Contact arrangement (view from termination side) 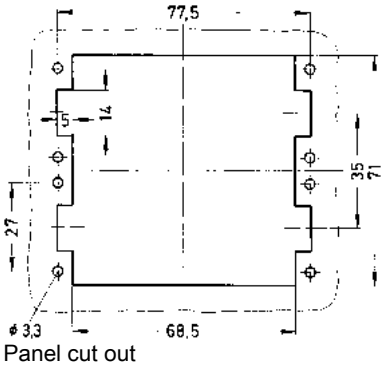 Panel cut out

Identification	Conductor cross-section (mm²)	Part number Male	Part number Female	Drawing (dimensions in mm)
Han® ES Press , Cage-clamp termination, 1 ... 16 Contact surface: Silver plated  Blue slide for hoods/housings high construction only You need two inserts for a complete assembly!	0,14 ... 2,5	09 33 016 2648	09 33 016 2748	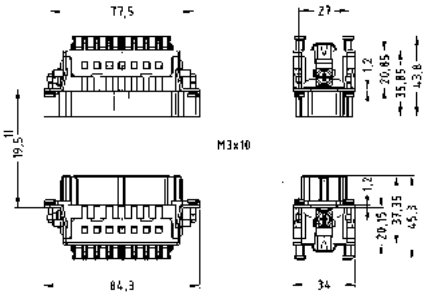 Distance for contact max. 21 mm
Han® ES Press , Continuing marking, Cage-clamp termination, 17 ... 32 Contact surface: Silver plated  Blue slide for hoods/housings high construction only You need two inserts for a complete assembly!	0,14 ... 2,5	09 33 016 2688	09 33 016 2788	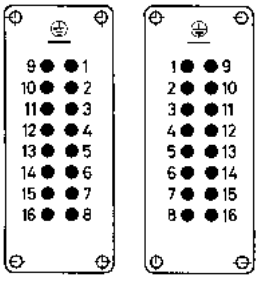 Contact arrangement (view from termination side)  Panel cut out

Identification	Conductor cross-section (mm²)	Part number Male	Part number Female	Drawing (dimensions in mm)
Han® ESS , Cage-clamp termination, 1 ... 16 Contact surface: Silver plated 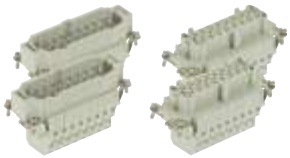 two terminations per contact for hoods/housings high construction only You need two inserts for a complete assembly!	0,14 ... 2,5	09 33 016 2672	09 33 016 2772	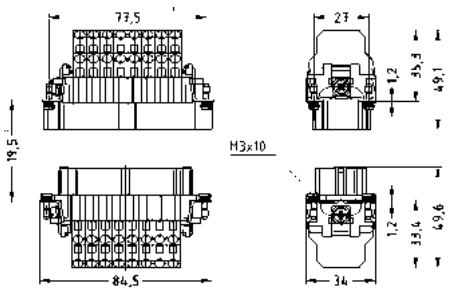 1) distance for contact max. 21 mm 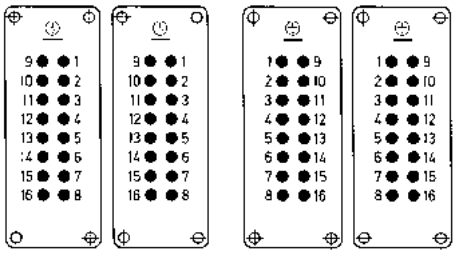 Contact arrangement (view from termination side) 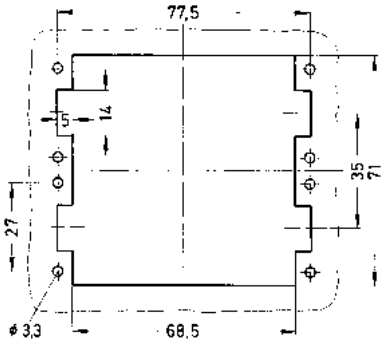 Panel cut out

Number of contacts

48+ ⏚

16 A 500 V 6 kV 3

Identification	Conductor cross-section (mm²)	Part number Male	Part number Female	Drawing (dimensions in mm)
Han® ES , Cage-clamp termination, 1 ... 24 Contact surface: Silver plated 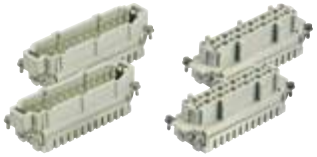 You need two inserts for a complete assembly!	0,14 ... 2,5	09 33 024 2616	09 33 024 2716	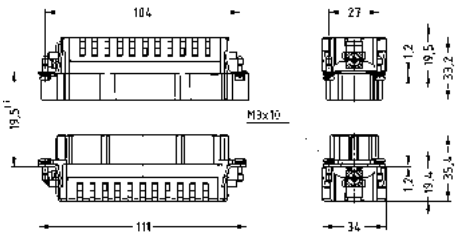 1) distance for contact max. 21 mm
Han® ES , Continuing marking, Cage-clamp termination, 25 ... 48 Contact surface: Silver plated 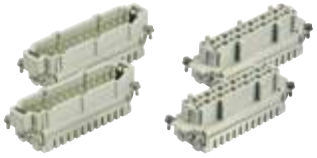 You need two inserts for a complete assembly!	0,14 ... 2,5	09 33 024 2626	09 33 024 2726	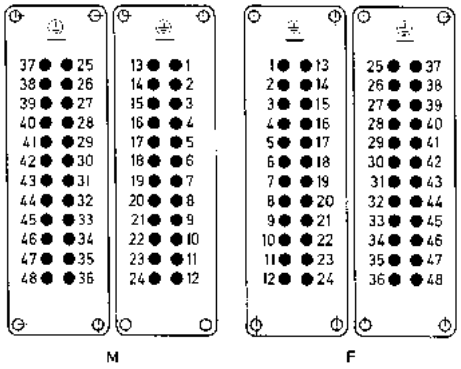 M F Contact arrangement (view from termination side) 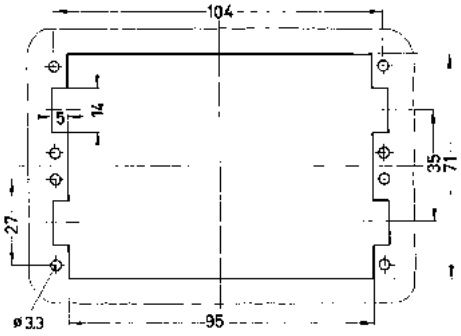 Panel cut out

Identification	Conductor cross-section (mm²)	Part number Male	Part number Female	Drawing (dimensions in mm)
Han® ES Press , Cage-clamp termination, 1 ... 24 Contact surface: Silver plated 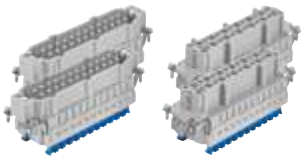 Blue slide for hoods/housings high construction only You need two inserts for a complete assembly!	0,14 ... 2,5	09 33 024 2648	09 33 024 2748	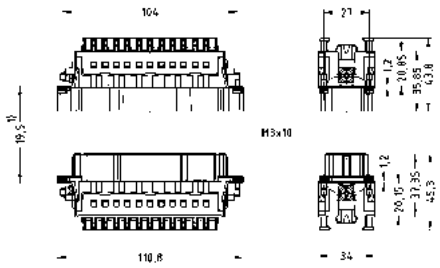 Distance for contact max. 21 mm
Han® ES Press , Continuing marking, Cage-clamp termination, 25 ... 48 Contact surface: Silver plated 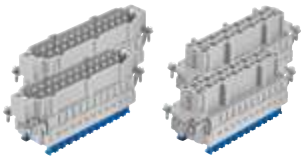 Blue slide for hoods/housings high construction only You need two inserts for a complete assembly!	0,14 ... 2,5	09 33 024 2688	09 33 024 2788	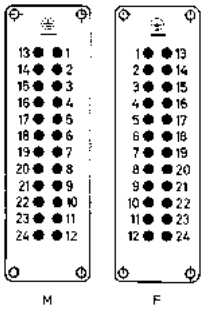 Contact arrangement (view from termination side) 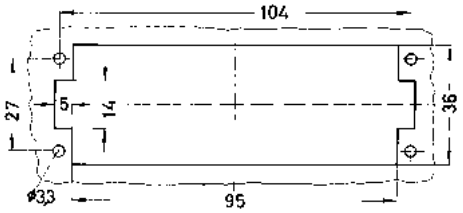 Panel cut out

Identification	Conductor cross-section (mm²)	Part number Male	Part number Female	Drawing (dimensions in mm)
Han® ESS , Cage-clamp termination, 1 ... 24 Contact surface: Silver plated 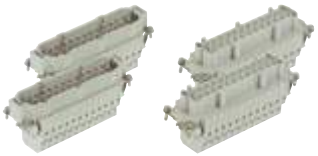 two terminations per contact for hoods/housings high construction only You need two inserts for a complete assembly!	0,14 ... 2,5	09 33 024 2672	09 33 024 2772	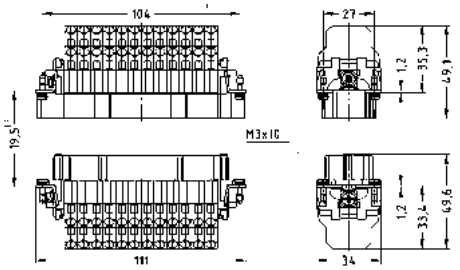 1) distance for contact max. 21 mm 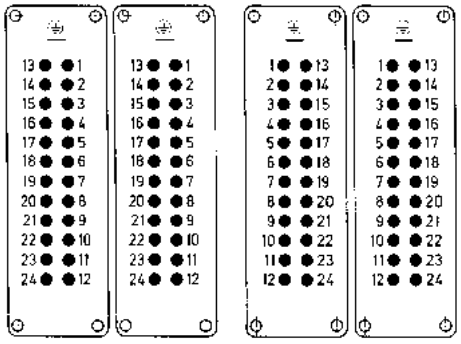 Contact arrangement (view from termination side) 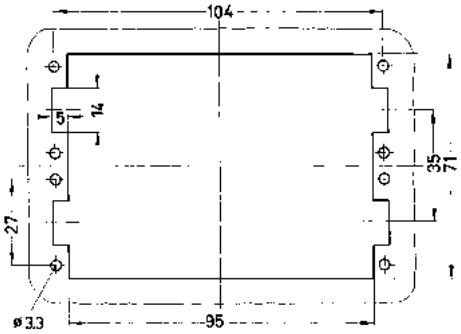 Panel cut out

Han® ES Press plug-in jumpers

16 A 500 V 6 kV 3



Technical characteristics

Number of contacts	4
Electrical data acc. to IEC 61984	16 A 500 V 6 kV 3
Rated current	16 A
Rated voltage	500 V
Rated impulse voltage	6 kV
Pollution degree	3
Rated voltage acc. to UL	600 V
Insulation resistance	≥10^{10} Ω
Contact resistance	≤1 mΩ
Limiting temperature	-40 ... +125 °C
Mating cycles	≥5
Material (contacts)	Copper alloy

Technical characteristics

Material (accessories)	Polyamide
Colour (accessories)	RAL 3018 (strawberry red), RAL 5012 (light blue), RAL 5004 (black blue)
Material flammability class acc. to UL 94	V-0
RoHS	compliant

Details

When using plug-in jumpers within Han® ES Press hoods of high construction must be used.

Identification		Part number	Drawing (dimensions in mm)
Han® ES Press , Plug-in jumper, 2 x 1, Transverse, Contact surface: Tin plated 	Black Blue Red	09 33 000 9822 09 33 000 9821 09 33 000 9820	
Han® ES Press , Plug-in jumper, 1 x 2, Longitudinal, Contact surface: Tin plated 	Black Blue Red	09 33 000 9852 09 33 000 9841 09 33 000 9830	
Han® ES Press , Plug-in jumper, 1 x 3, Longitudinal, Contact surface: Tin plated 	Black Blue Red	09 33 000 9853 09 33 000 9842 09 33 000 9831	

Han® ES Press plug-in jumpers

Identification		Part number	Drawing (dimensions in mm)
Han® ES Press , Plug-in jumper, 1 x 4, Longitudinal, Contact surface: Tin plated	Black Blue Red	09 33 000 9854 09 33 000 9843 09 33 000 9832	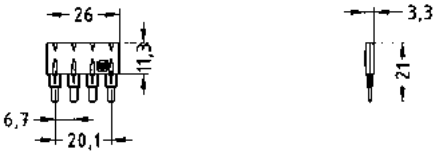
Han® ES Press , Plug-in jumper, 1 x 5, Longitudinal, Contact surface: Tin plated	Black Blue Red	09 33 000 9855 09 33 000 9844 09 33 000 9833	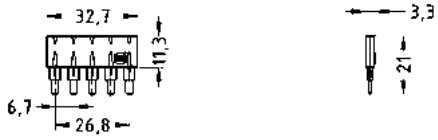
Han® ES Press , Plug-in jumper, 1 x 8, Longitudinal, Contact surface: Tin plated	Black Blue Red	09 33 000 9858 09 33 000 9847 09 33 000 9836	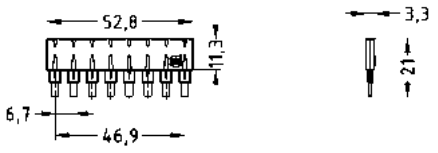
Han® ES Press , Plug-in jumper, 1 x 12, Longitudinal, Contact surface: Tin plated	Black Blue Red	09 33 000 9862 09 33 000 9851 09 33 000 9840	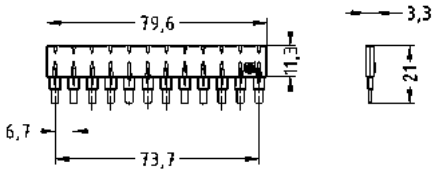

Features

- Higher density of crimping contacts
- Coded insert
- Gold and silver contacts available

Technical characteristics

Number of contacts	10, 18, 32, 46, 64, 92
Electrical data acc. to IEC 61984	16 A 500 V 6 kV 3
Rated current	16 A
Rated voltage	500 V
Rated impulse voltage	6 kV
Pollution degree	3
Rated voltage acc. to UL	600 V
Rated voltage acc. to CSA	600 V
Insulation resistance	≥10^{10} Ω
Limiting temperature	-40 ... +125 °C
Mating cycles	≥500
Material (insert)	Polycarbonate
Colour (insert)	RAL 7032 (pebble grey)
Material flammability class acc. to UL 94	V-0
RoHS	compliant

Derating

Current carrying capacity

The current carrying capacity of the connectors is limited by the thermal load capability of the contact element material including the connections and the insulating parts. The derating curve is therefore valid for currents which flow constantly (non-intermittent) through each contact element of the connector evenly, without exceeding the allowed maximum temperature.

Measuring and testing techniques acc. to IEC 60512-5-2

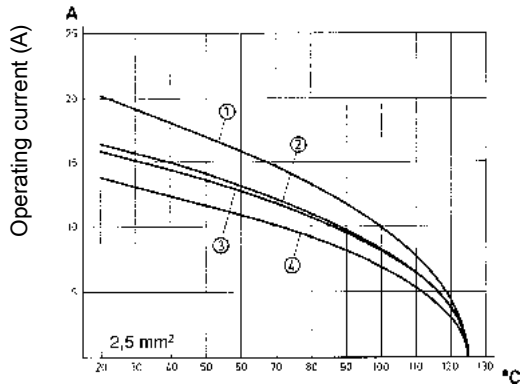

Ambient temperature (°C)

① Han® 10 EE
② Han® 18 EE
③ Han® 32 EE Han® 64 EE
④ Han® 46 EE Han® 92 EE

Derating

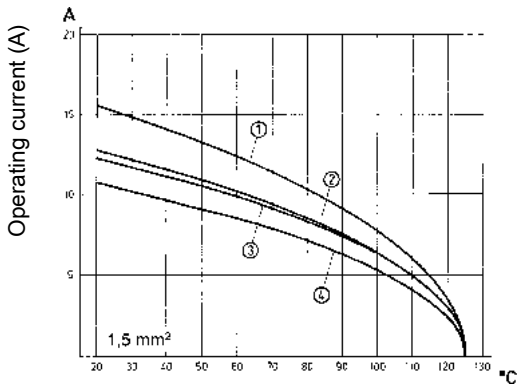

Ambient temperature (°C)

① Han® 10 EE
② Han® 18 EE
③ Han® 32 EE Han® 64 EE
④ Han® 46 EE Han® 92 EE

Specifications and approvals

EN 60664-1
IEC 61984
UL 1977 ECBT2.E235076
UL 2237 PVVA2.E318390
CSA-C22.2 No. 182.3 PVVA8.E318390
DNV GL

Details

Internal use in the switch cabinet in conjunction with Han-Snap® (see chapter 11)

Suitable for hoods/housings of series Han® B, Han® M, Han® EMC, Han® HPR, Han® Easy Hood (see chapter 31)

Tightening torque 0.5 Nm

Tightening torque PE screw 1.2 Nm

Number of contacts

10+ ⏚

16 A 500 V 6 kV 3

Identification	Conductor cross-section (mm²)	Part number Male	Part number Female	Drawing (dimensions in mm)
Han® EE , Crimp termination 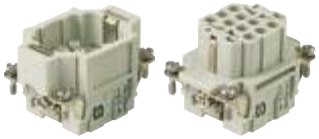 Please order crimp contacts separately.	0,14 ... 4	09 32 010 3001	09 32 010 3101	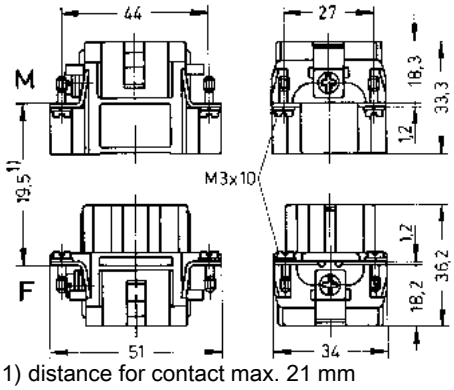 1) distance for contact max. 21 mm 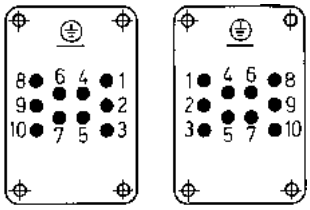 M F Contact arrangement (view from termination side) 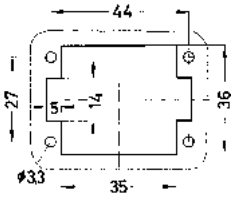 Panel cut out

Number of contacts

18+ ⏚

16 A 500 V 6 kV 3

Identification	Conductor cross-section (mm²)	Part number Male	Part number Female	Drawing (dimensions in mm)
Han® EE , Crimp termination 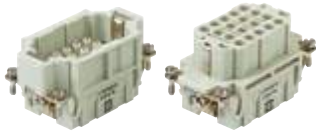 Please order crimp contacts separately.	0,14 ... 4	09 32 018 3001	09 32 018 3101	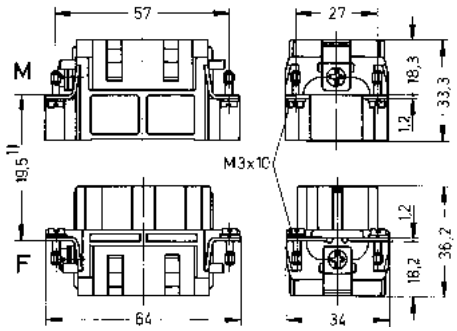 1) distance for contact max. 21 mm 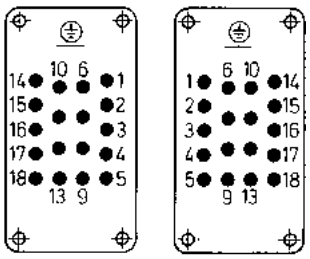 M F Contact arrangement (view from termination side) 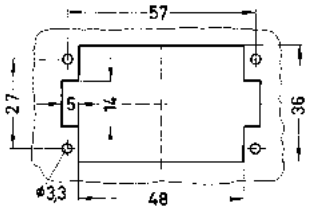 Panel cut out

Number of contacts

32+ ⏚

16 A 500 V 6 kV 3

Identification	Conductor cross-section (mm²)	Part number Male	Part number Female	Drawing (dimensions in mm)
Han® EE , Crimp termination  Please order crimp contacts separately.	0,14 ... 4	09 32 032 3001	09 32 032 3101	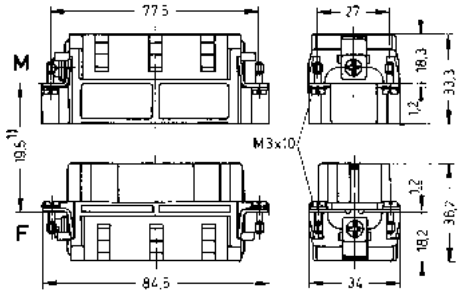 1) distance for contact max. 21 mm 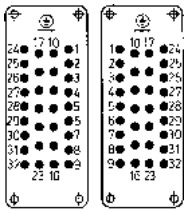 Contact arrangement (view from termination side) 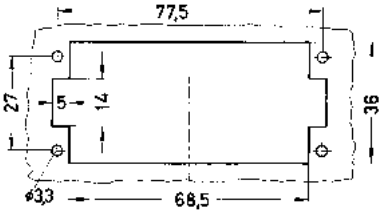 Panel cut out

Number of contacts

46+ ⏚

16 A 500 V 6 kV 3

Identification	Conductor cross-section (mm²)	Part number Male	Part number Female	Drawing (dimensions in mm)
Han® EE , Crimp termination  Please order crimp contacts separately.	0,14 ... 4	09 32 046 3001	09 32 046 3101	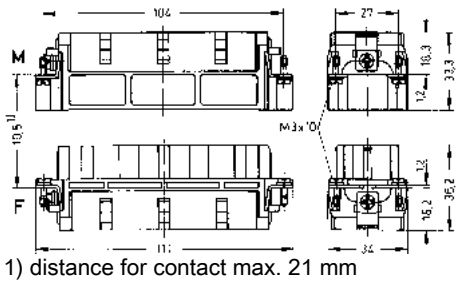 1) distance for contact max. 21 mm 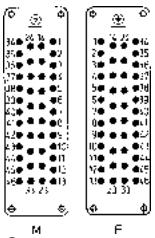 Contact arrangement (view from termination side) 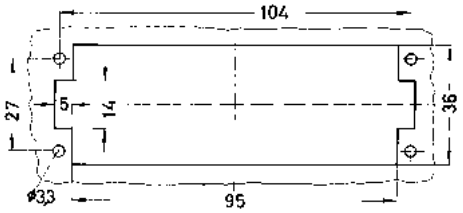 Panel cut out

Number of contacts

64+ ⏚

16 A 500 V 6 kV 3

Identification	Conductor cross-section (mm²)	Part number Male	Part number Female	Drawing (dimensions in mm)
Han® EE , Crimp termination, 1 ... 32 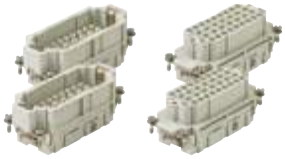 Please order crimp contacts separately. You need two inserts for a complete assembly!	0,14 ... 4	09 32 032 3001	09 32 032 3101	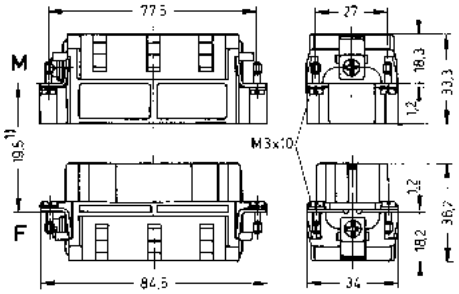 1) distance for contact max. 21 mm
Han® EE , Continuing marking, Crimp termination, 33 ... 64  Please order crimp contacts separately. You need two inserts for a complete assembly!	0,14 ... 4	09 32 032 3011	09 32 032 3111	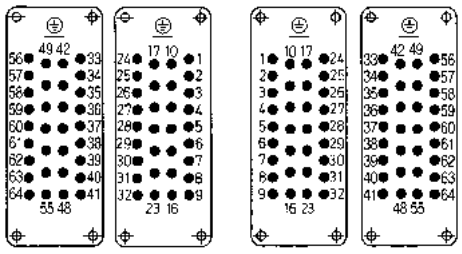 Contact arrangement (view from termination side) 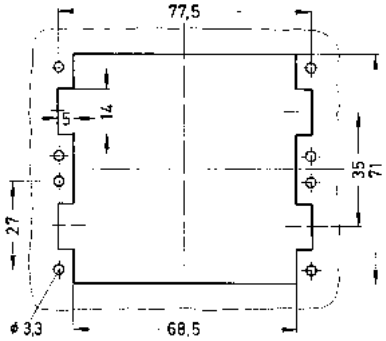 Panel cut out

Number of contacts

92+ ⏚

16 A 500 V 6 kV 3

Identification	Conductor cross-section (mm²)	Part number Male	Part number Female	Drawing (dimensions in mm)
Han® EE , Crimp termination, 1 ... 46  Please order crimp contacts separately. You need two inserts for a complete assembly!	0,14 ... 4	09 32 046 3001	09 32 046 3101	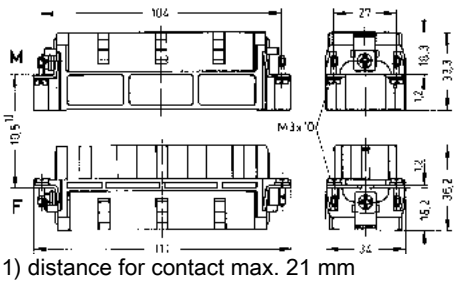 1) distance for contact max. 21 mm
Han® EE , Continuing marking, Crimp termination, 47 ... 92  Please order crimp contacts separately. You need two inserts for a complete assembly!	0,14 ... 4	09 32 046 3011	09 32 046 3111	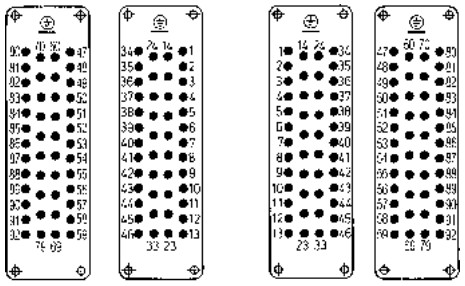 M F Contact arrangement (view from termination side) 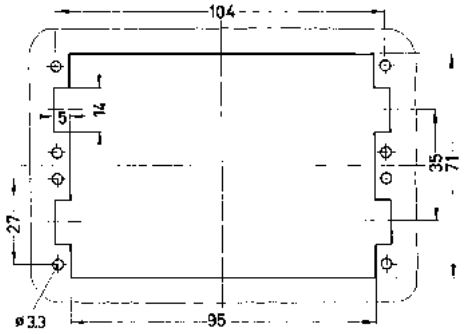 Panel cut out

Features

- Highest density of crimping contacts
- Coded insert
- Gold and silver contacts available

Technical characteristics

Number of contacts	40, 64
Electrical data acc. to IEC 61984	16 A 500 V 6 kV 3
Rated current	16 A
Rated voltage	500 V
Rated impulse voltage	6 kV
Pollution degree	3
Insulation resistance	≥10^{10} Ω
Limiting temperature	-40 ... +125 °C
Mating cycles	≥500
Material (insert)	Polycarbonate
Colour (insert)	RAL 7032 (pebble grey)
Material flammability class acc. to UL 94	V-0
RoHS	compliant

Derating

Current carrying capacity

The current carrying capacity of the connectors is limited by the thermal load capability of the contact element material including the connections and the insulating parts. The derating curve is therefore valid for currents which flow constantly (non-intermittent) through each contact element of the connector evenly, without exceeding the allowed maximum temperature.

Measuring and testing techniques acc. to IEC 60512-5-2

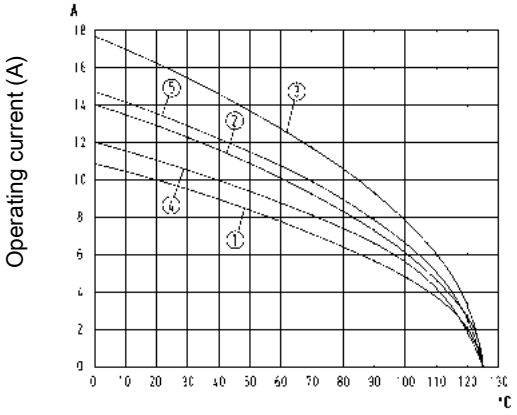

Ambient temperature (°C)

① Han® 64 EEE / 1.5 mm²
② Han® 64 EEE / 2.5 mm²
③ Han® 64 EEE / 4 mm²
④ Han® 40 EEE / 1.5 mm²
⑤ Han® 40 EEE / 2.5 mm²

Specifications and approvals

EN 60664-1
IEC 61984
UL 1977 ECBT2.E235076
CSA-C22.2 No. 182.3 ECBT8.E235076

Details

Internal use in the switch cabinet in conjunction with Han-Snap® (see chapter 11)

Suitable for hoods/housings of series Han® B, Han® M, Han® EMC, Han® HPR, Han® Easy Hood (see chapter 31)

Tightening torque 0.5 Nm

Tightening torque PE screw 1.2 Nm

Number of contacts

40+ ⏚

16 A 500 V 6 kV 3

Identification	Conductor cross-section (mm²)	Part number Male	Part number Female	Drawing (dimensions in mm)
Han® EEE , Crimp termination  Please order crimp contacts separately.	0,14 ... 4	09 32 040 3001	09 32 040 3101	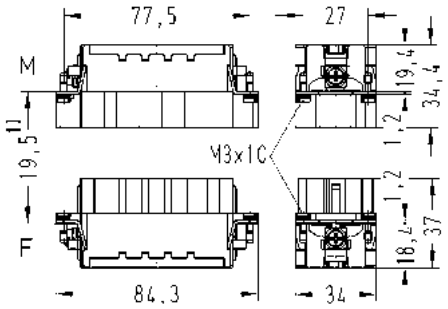 1) distance for contact max. 21 mm 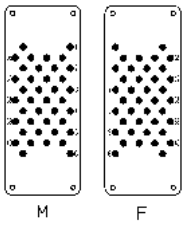 Contact arrangement (view from termination side) 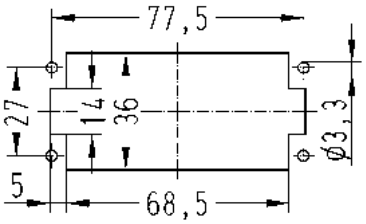 Panel cut out

Number of contacts

64+ ⏚

16 A 500 V 6 kV 3

Identification	Conductor cross-section (mm²)	Part number Male	Part number Female	Drawing (dimensions in mm)
Han® EEE , Crimp termination  Please order crimp contacts separately.	0,14 ... 4	09 32 064 3001	09 32 064 3101	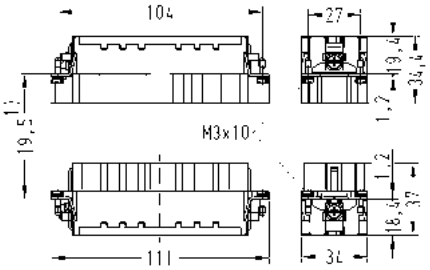 1) distance for contact max. 21 mm 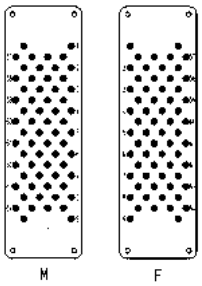 Contact arrangement (view from termination side) 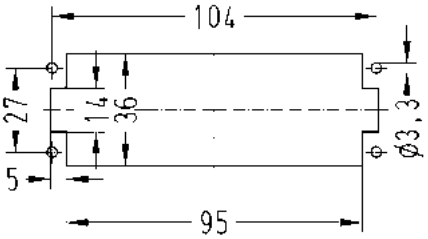 Panel cut out

Technical characteristics

Contact resistance	≤1 mΩ
Material (contacts)	Copper alloy
Material (accessories)	Thermoplastic
RoHS	compliant with exemption, compliant
RoHS exemptions	**6c:** Copper alloy containing up to 4 % lead by weight

Specifications and approvals

EN 60664-1
IEC 61984

Details

Crimping tools see chapter 90

Remarks on the crimp technique

The wire gauges mentioned in the catalogue refer to geometric wire gauges of cables.

Coding pin

Use of the coding pin prevents incorrect mating to other connectors of the same type. The male pin should be omitted from the opposing cavity in the male insert.

Identification	Conductor cross-section (mm²)	Part number Male	Part number Female	Drawing (dimensions in mm)
Han E® , Crimp contact, Contact surface: Silver plated 	0,14 ... 0,37 0,5 0,75 1 1,5 2,5 3 4	09 33 000 6127 09 33 000 6121 09 33 000 6114 09 33 000 6105 09 33 000 6104 09 33 000 6102 09 33 000 6106 09 33 000 6107	09 33 000 6227 09 33 000 6220 09 33 000 6214 09 33 000 6205 09 33 000 6204 09 33 000 6202 09 33 000 6206 09 33 000 6207	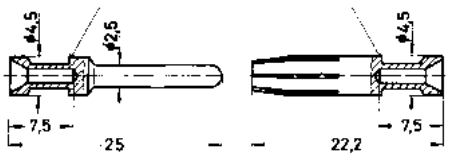 Conductor cross-section / Identification 0.14-0.37 mm² AWG 26-22 — no groove 0.5 mm² AWG 20 — no groove 0.75 mm² AWG 18 — 1 groove* 1 mm² AWG 18 — 1 groove 1.5 mm² AWG 16 — 2 grooves 2.5 mm² AWG 14 — 3 grooves 3 mm² AWG 12 — wide groove 4 mm² AWG 12 — no groove * on the back crimp collar Stripping length 7.5 mm
Han E® , Crimp contact, Contact surface: Gold plated 	0,14 ... 0,37 0,5 0,75 1 1,5 2,5 4	09 33 000 6117 09 33 000 6122 09 33 000 6115 09 33 000 6118 09 33 000 6116 09 33 000 6123 09 33 000 6119	09 33 000 6217 09 33 000 6222 09 33 000 6215 09 33 000 6218 09 33 000 6216 09 33 000 6223 09 33 000 6221	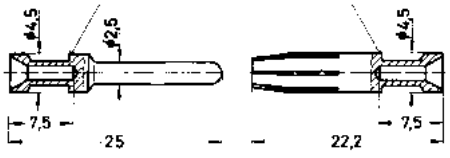 Conductor cross-section / Identification 0.14-0.37 mm² AWG 26-22 — no groove 0.5 mm² AWG 20 — no groove 0.75 mm² AWG 18 — 1 groove* 1 mm² AWG 18 — 1 groove 1.5 mm² AWG 16 — 2 grooves 2.5 mm² AWG 14 — 3 grooves 3 mm² AWG 12 — wide groove 4 mm² AWG 12 — no groove * on the back crimp collar Stripping length 7.5 mm

Identification	Conductor cross-section (mm^2)	Part number Male	Part number Female	Drawing (dimensions in mm)
Han E® , Crimp contact, Relay contact , Contact surface: Silver plated 	0,75 ... 1 1,5 2,5	09 33 000 6109 09 33 000 6110 09 33 000 6111		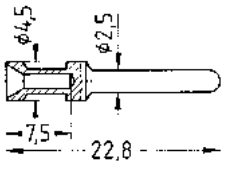
FO contact, for 1 mm plastic fibre 		20 10 001 3311	20 10 001 3321	 Crimp zone
Han E® Han® EE Han® EEE , Coding pin  for crimp inserts only			09 33 000 9954	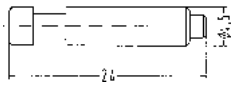

Contents	Page
Han Hv E®	**04.3**
Han® 16 / 32 Hv E	**04.9**
Han® Hv ES	**04.12**
Contacts	**04.19**
Hoods/Housings	**04.20**

Difference: Han Hv E® to standard hoods/housings

Standard Hoods/Housings Han® B

Suitable for
Han® Hv ES cage-clamp terminal
and Han Hv E® crimp terminal



Special hood/housing Han Hv E®

Suitable for
Han Hv E® screw terminal



Features

- Designed for application up to 830 V
- Available in multiple termination techniques

Technical characteristics

Number of contacts	3, 6, 10, 12, 20
Additional contacts	+ 2 additional relay contacts, + 4 additional relay contacts
Electrical data acc. to IEC 61984	16 A 830 V 8 kV 3
Rated current	16 A
Rated voltage	830 V
Rated impulse voltage	8 kV
Pollution degree	3
Rated voltage acc. to UL	600 V
Rated voltage acc. to CSA	600 V
Insulation resistance	≥10^{10} Ω
Contact resistance	≤1 mΩ
Limiting temperature	-40 ... +125 °C
Mating cycles	≥500
Material (insert)	Polycarbonate
Colour (insert)	RAL 7032 (pebble grey)
Material (contacts)	Copper alloy
Material flammability class acc. to UL 94	V-0
RoHS	compliant, compliant with exemption
RoHS exemptions	**6c:** Copper alloy containing up to 4 % lead by weight

Derating

Current carrying capacity

The current carrying capacity of the connectors is limited by the thermal load capability of the contact element material including the connections and the insulating parts. The derating curve is therefore valid for currents which flow constantly (non-intermittent) through each contact element of the connector evenly, without exceeding the allowed maximum temperature.

Measuring and testing techniques acc. to IEC 60512-5-2

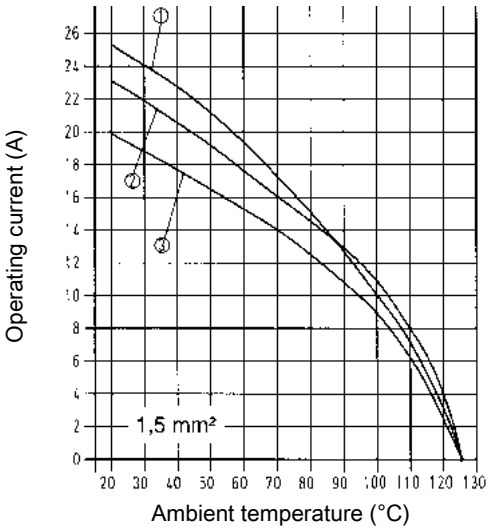

① Han® 3 Hv E
② Han® 6 / 12 Hv E
③ Han® 10 / 16 / 20 / 32 Hv E

Derating

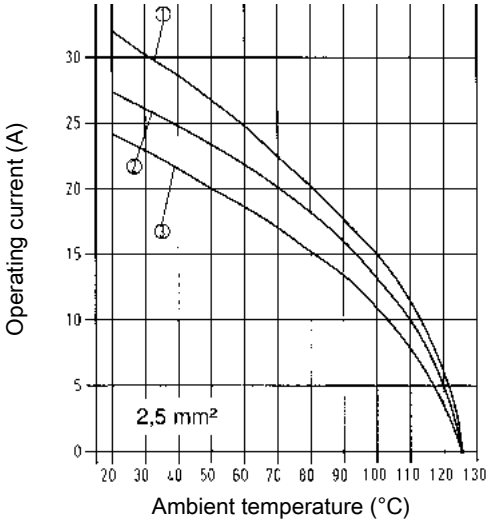

① Han® 3 Hv E
② Han® 6 / 12 Hv E
③ Han® 10 / 16 / 20 / 32 Hv E

Specifications and approvals

EN 60664-1
IEC 61984
UL 1977 ECBT2.E235076

Details

Han Hv E® screw requires special Han Hv E® housings

Tightening torque 0.5 Nm

Tightening torque PE screw 1.2 Nm

Number of contacts

3+ ⏚

16 A 830 V 8 kV 3
+ 2 additional relay contacts

Identification	Conductor cross-section (mm²)	Part number Male	Part number Female	Drawing (dimensions in mm)
Han Hv E® , Crimp termination  Please order crimp contacts separately.	0,5 ... 4	09 34 003 2602	09 34 003 2702	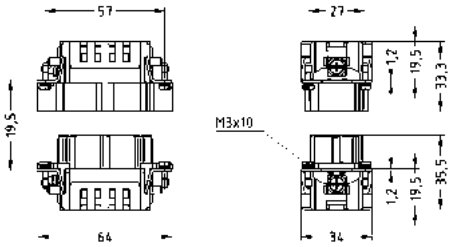
Han Hv E® , Screw termination, With wire protection, Contact surface: Silver plated 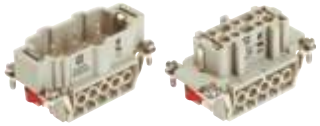	0,75 ... 2,5	09 34 003 2601	09 34 003 2701	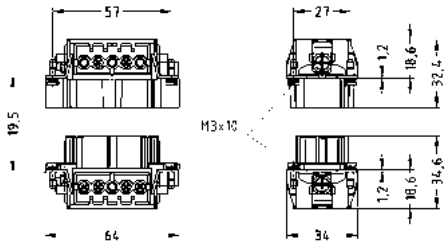 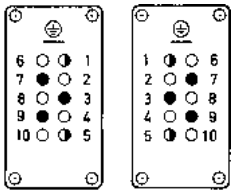 M F Contact arrangement (view from termination side) Han® 3 Hv E ◆ Power contacts ◐ Relay contact ○ Without contact 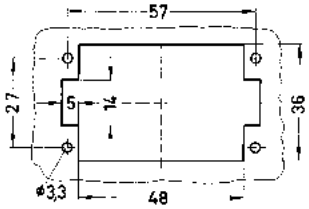 Panel cut out for use without Hoods/Housings

Number of contacts

6+ ⏚

16 A 830 V 8 kV 3
+ 2 additional relay contacts

Identification	Conductor cross-section (mm²)	Part number Male	Part number Female	Drawing (dimensions in mm)
Han Hv E® , Crimp termination  Please order crimp contacts separately.	0,5 ... 4	09 34 006 2602	09 34 006 2702	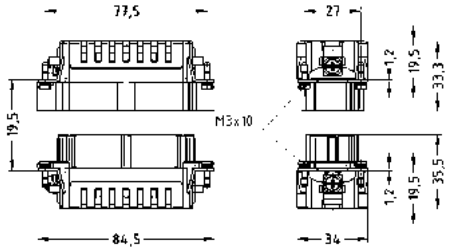
Han Hv E® , Screw termination, With wire protection, Contact surface: Silver plated 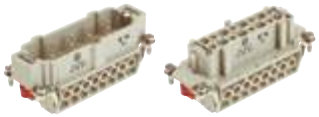	0,75 ... 2,5	09 34 006 2601	09 34 006 2701	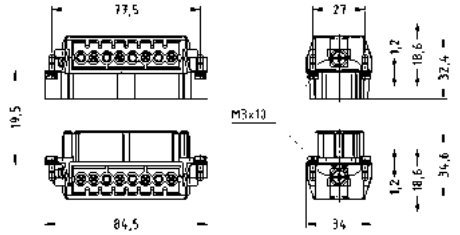 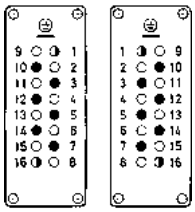 M F Contact arrangement (view from termination side) Han® 6 Hv E ◆ Power contacts ◐ Relay contact ○ Without contact  Panel cut out for use without Hoods/Housings

Number of contacts

10+ ⏚

16 A 830 V 8 kV 3
+ 2 additional relay contacts

Identification	Conductor cross-section (mm²)	Part number Male	Part number Female	Drawing (dimensions in mm)
Han Hv E® , Crimp termination 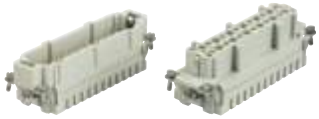 Please order crimp contacts separately.	0,5 ... 4	09 34 010 2602	09 34 010 2702	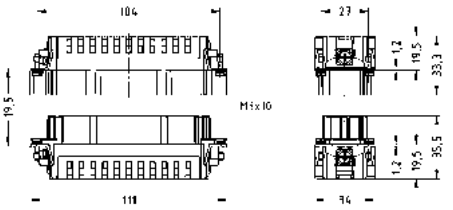
Han Hv E® , Screw termination, With wire protection, Contact surface: Silver plated 	0,75 ... 2,5	09 34 010 2601	09 34 010 2701	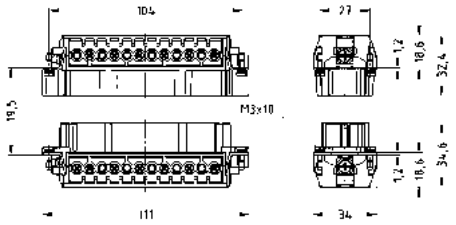 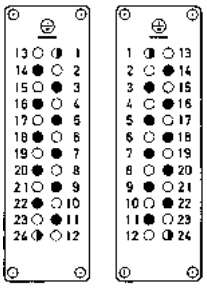 M F Contact arrangement (view from termination side) Han® 10 Hv E ◆ Power contacts ◐ Relay contact ○ Without contact 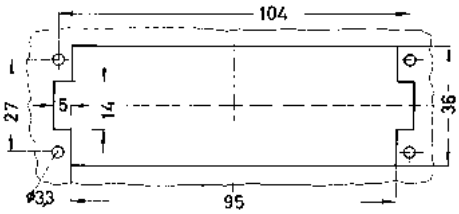 Panel cut out for use without Hoods/Housings

Number of contacts

12+ ⏚

16 A 830 V 8 kV 3
+ 4 additional relay contacts

Identification	Conductor cross-section (mm²)	Part number Male	Part number Female	Drawing (dimensions in mm)
Han Hv E® , Crimp termination 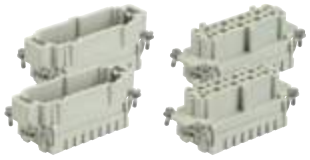 Please order crimp contacts separately. You need two inserts for a complete assembly!	0,5 ... 4	09 34 006 2602	09 34 006 2702	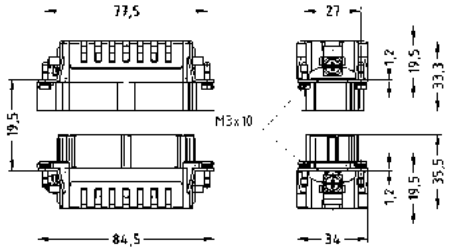
Han Hv E® , Screw termination, With wire protection, Contact surface: Silver plated 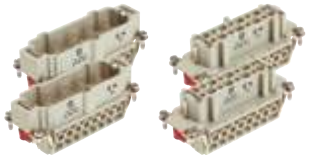 You need two inserts for a complete assembly!	0,75 ... 2,5	09 34 006 2601	09 34 006 2701	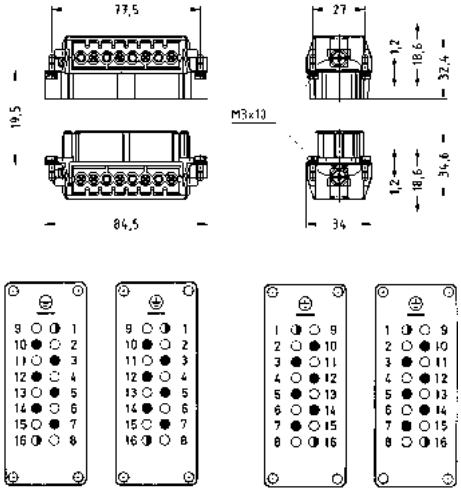 M F Contact arrangement (view from termination side) Han® 12 Hv E ◆ Power contacts ◐ Relay contact ○ Without contact 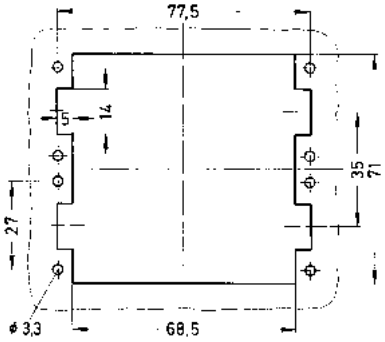 Panel cut out for use without Hoods/Housings

Number of contacts

20+ ⏚

16 A 830 V 8 kV 3
+ 4 additional relay contacts

Identification	Conductor cross-section (mm²)	Part number Male	Part number Female	Drawing (dimensions in mm)
Han Hv E® , Crimp termination 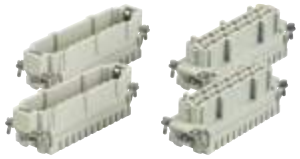 Please order crimp contacts separately. You need two inserts for a complete assembly!	0,5 ... 4	09 34 010 2602	09 34 010 2702	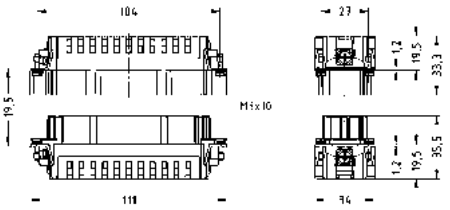
Han Hv E® , Screw termination, With wire protection, Contact surface: Silver plated  You need two inserts for a complete assembly!	0,75 ... 2,5	09 34 010 2601	09 34 010 2701	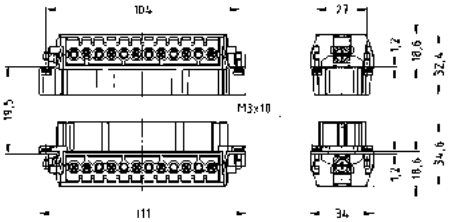 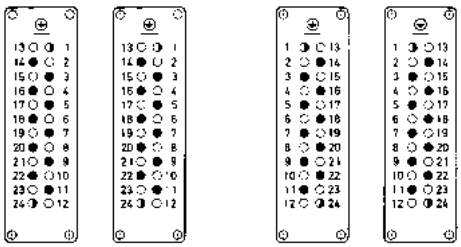 M F Contact arrangement (view from termination side) Han® 20 Hv E ◆ Power contacts ◐ Relay contact ○ Without contact 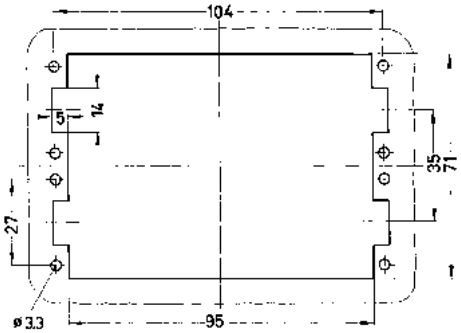 Panel cut out for use without Hoods/Housings

Features

- Designed for application up to 690 V
- No special tools required

Technical characteristics

Number of contacts	16, 32
Additional contacts	+ 2 additional relay contacts, + 4 additional relay contacts
Electrical data acc. to IEC 61984	16 A 400/690 V 6 kV 3
Rated current	16 A
Rated voltage conductor-earth	400 V
Rated voltage conductor-conductor	690 V
Rated impulse voltage	6 kV
Pollution degree	3
Rated voltage acc. to UL	600 V
Rated voltage acc. to CSA	600 V
Insulation resistance	≥10^{10} Ω
Contact resistance	≤1 mΩ
Limiting temperature	-40 ... +125 °C
Mating cycles	≥500
Material (insert)	Polycarbonate
Colour (insert)	RAL 7032 (pebble grey)
Material (contacts)	Copper alloy
Material flammability class acc. to UL 94	V-0
RoHS	compliant with exemption
RoHS exemptions	**6c:** Copper alloy containing up to 4 % lead by weight

Derating

Current carrying capacity

The current carrying capacity of the connectors is limited by the thermal load capability of the contact element material including the connections and the insulating parts. The derating curve is therefore valid for currents which flow constantly (non-intermittent) through each contact element of the connector evenly, without exceeding the allowed maximum temperature.

Measuring and testing techniques acc. to IEC 60512-5-2

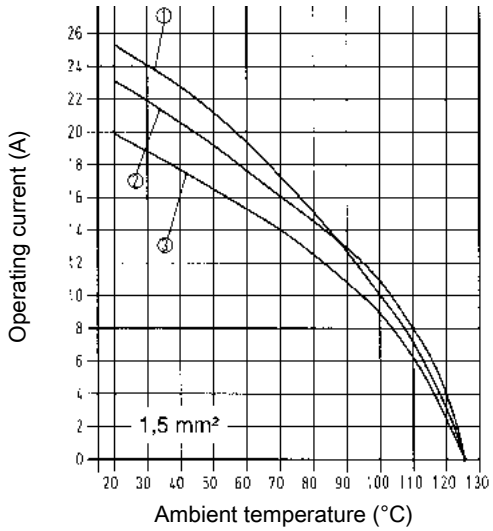

① Han® 3 Hv E
② Han® 6 / 12 Hv E
③ Han® 10 / 16 / 20 / 32 Hv E

Derating

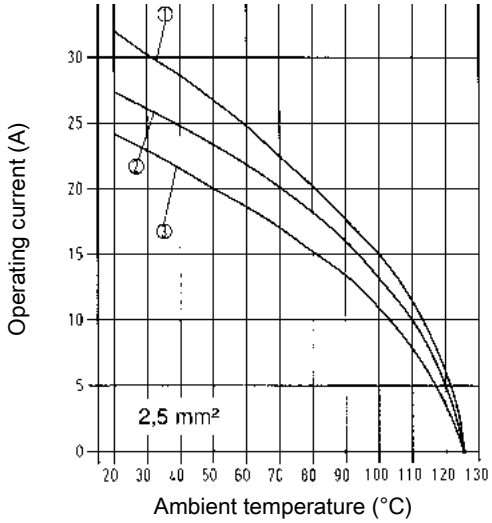

① Han® 3 Hv E
② Han® 6 / 12 Hv E
③ Han® 10 / 16 / 20 / 32 Hv E

Specifications and approvals

EN 60664-1
IEC 61984
UL 1977 ECBT2.E235076

Details

Han Hv E® screw requires special Han Hv E® housings

Tightening torque 0.5 Nm

Tightening torque PE screw 1.2 Nm

Number of contacts

16+ ⏚

16 A 400/690 V 6 kV 3
+ 2 additional relay contacts

Identification	Conductor cross-section (mm²)	Part number Male	Part number Female	Drawing (dimensions in mm)
Han Hv E® , Screw termination, With wire protection, Contact surface: Silver plated 	0,75 ... 2,5	09 34 016 2601	09 34 016 2701	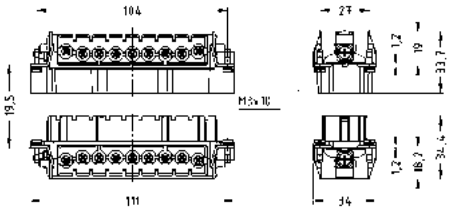 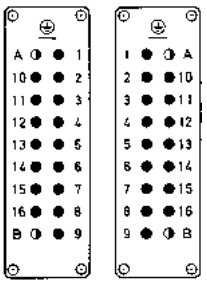 M F Contact arrangement (view from termination side) Han® 16 Hv E ◆ Power contacts ◐ Relay contact ○ Without contact 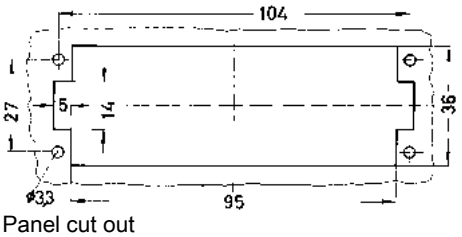 Panel cut out for use without Hoods/Housings

Number of contacts

32+ ⏚

16 A 400/690 V 6 kV 3
+ 4 additional relay contacts

Identification	Conductor cross-section (mm²)	Part number Male	Part number Female	Drawing (dimensions in mm)
Han Hv E® , Screw termination, With wire protection, Contact surface: Silver plated  You need two inserts for a complete assembly!	0,75 ... 2,5	09 34 016 2601	09 34 016 2701	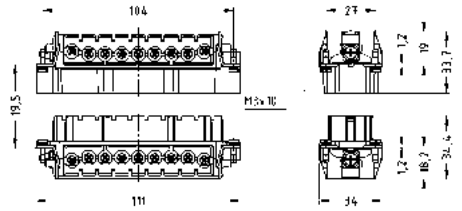 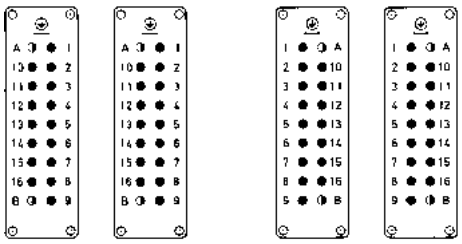 M F Contact arrangement (view from termination side) Han® 32 Hv E ◆ Power contacts ◐ Relay contact ○ Without contact 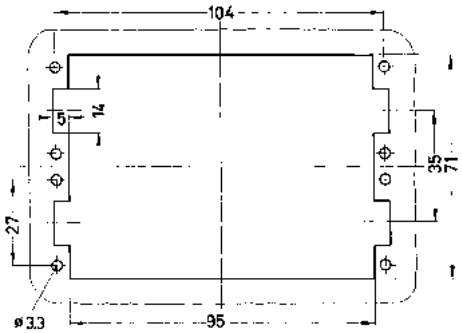 Panel cut out for use without Hoods/Housings

Features

- Designed for application up to 830 V
- Reliable cage clamp termination
- No special tools required
- Vibration-proved

Technical characteristics

Number of contacts	3, 6, 10, 12, 20
Additional contacts	+ 2 additional relay contacts, + 4 additional relay contacts
Electrical data acc. to IEC 61984	16 A 830 V 8 kV 3
Rated current	16 A
Rated voltage	830 V
Rated impulse voltage	8 kV
Pollution degree	3
Rated voltage acc. to UL	600 V
Rated voltage acc. to CSA	600 V
Insulation resistance	≥10^{10} Ω
Contact resistance	≤3 mΩ
Limiting temperature	-40 ... +125 °C
Mating cycles	≥500
Material (insert)	Polycarbonate
Colour (insert)	RAL 7032 (pebble grey)
Material (contacts)	Copper alloy
Material flammability class acc. to UL 94	V-0
RoHS	compliant with exemption
RoHS exemptions	**6c:** Copper alloy containing up to 4 % lead by weight

Derating

Current carrying capacity

The current carrying capacity of the connectors is limited by the thermal load capability of the contact element material including the connections and the insulating parts. The derating curve is therefore valid for currents which flow constantly (non-intermittent) through each contact element of the connector evenly, without exceeding the allowed maximum temperature.

Measuring and testing techniques acc. to IEC 60512-5-2

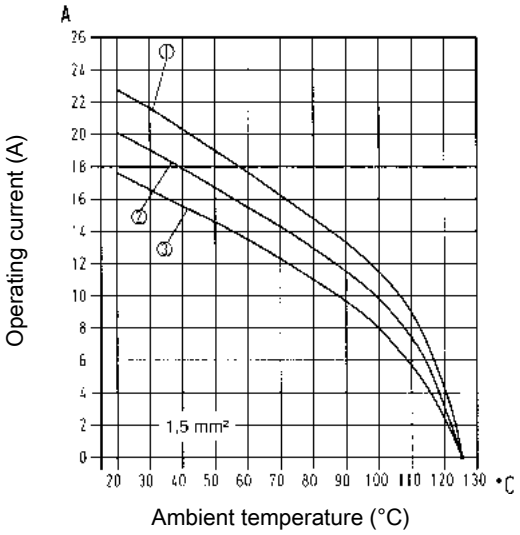

① Han® 3 Hv ES
② Han® 6 Hv ES / Han® 12 Hv ES
③ Han® 10 Hv ES / Han® 20 Hv ES

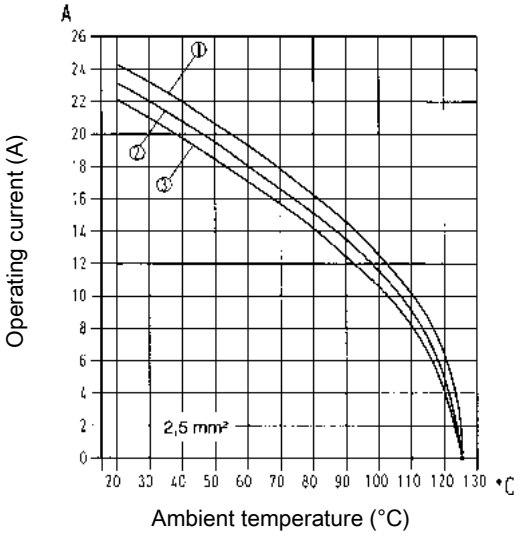

① Han® 3 Hv ES
② Han® 6 Hv ES / Han® 12 Hv ES
③ Han® 10 Hv ES / Han® 20 Hv ES

Specifications and approvals

EN 60664-1
IEC 61984
UL 1977 ECBT2.E235076

Details

Not mating compatible to Han Hv E® screw/crimp termination

Tightening torque 0.5 Nm

Details

Tightening torque PE screw 1.2 Nm

Number of contacts

3+ ⏚

16 A 830 V 8 kV 3
+ 2 additional relay contacts

Identification	Conductor cross-section (mm²)	Part number Male	Part number Female	Drawing (dimensions in mm)
Han® Hv ES , Cage-clamp termination, Contact surface: Silver plated 	0,14 ... 2,5	09 34 003 2616	09 34 003 2716	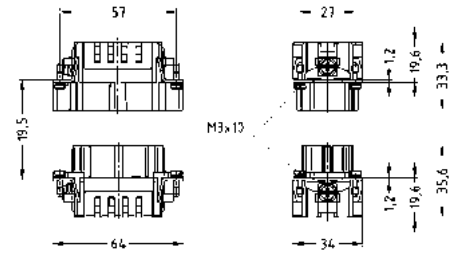 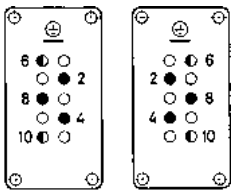 M F Contact arrangement (view from termination side) Han® 3 Hv ES ◆ Power contacts ◐ Relay contact ○ Without contact 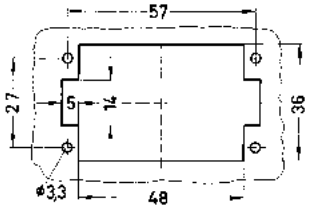 Panel cut out for use without Hoods/Housings

Number of contacts

6+ ⏚

16 A 830 V 8 kV 3
+ 2 additional relay contacts

Identification	Conductor cross-section (mm²)	Part number Male	Part number Female	Drawing (dimensions in mm)
Han® Hv ES , Cage-clamp termination, Contact surface: Silver plated 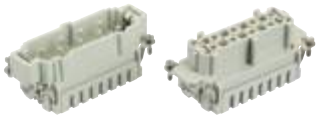	0,14 ... 2,5	09 34 006 2616	09 34 006 2716	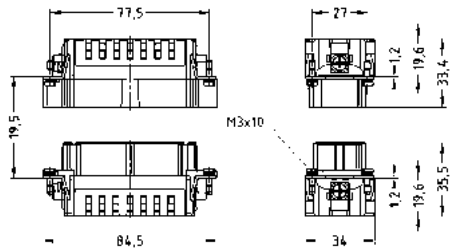 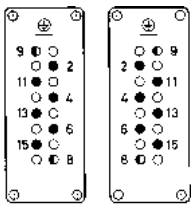 M F Contact arrangement (view from termination side) Han® 6 Hv ES ◆ Power contacts ◐ Relay contact ○ Without contact 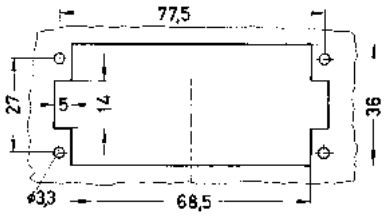 Panel cut out for use without Hoods/Housings

Number of contacts

10+ ⏚

16 A 830 V 8 kV 3
+ 2 additional relay contacts

Identification	Conductor cross-section (mm²)	Part number Male	Part number Female	Drawing (dimensions in mm)
Han® Hv ES , Cage-clamp termination, Contact surface: Silver plated 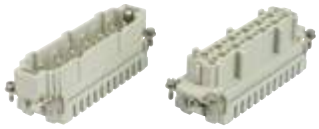	0,14 ... 2,5	09 34 010 2616	09 34 010 2716	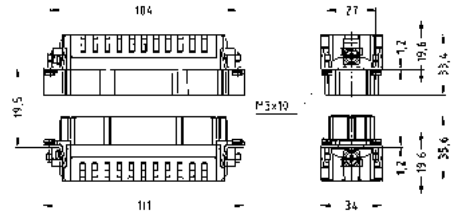 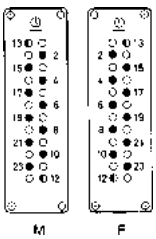 M F Contact arrangement (view from termination side) Han® 10 Hv ES ◆ Power contacts ◐ Relay contact ○ Without contact 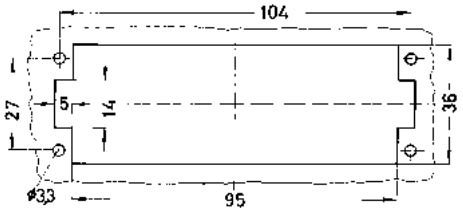 Panel cut out for use without Hoods/Housings

Number of contacts

12+ ⏚

16 A 830 V 8 kV 3
+ 4 additional relay contacts

Identification	Conductor cross-section (mm²)	Part number Male	Part number Female	Drawing (dimensions in mm)
Han® Hv ES , Cage-clamp termination, Contact surface: Silver plated 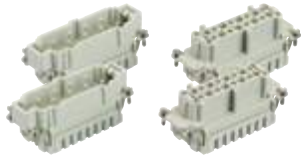 You need two inserts for a complete assembly!	0,14 ... 2,5	09 34 006 2616	09 34 006 2716	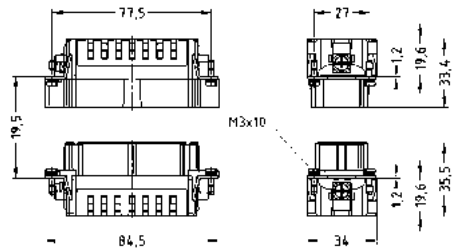 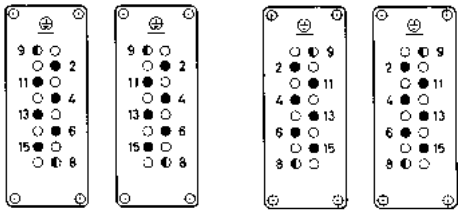 Contact arrangement (view from termination side) Han® 12 Hv ES ◆ Power contacts ◐ Relay contact ○ Without contact 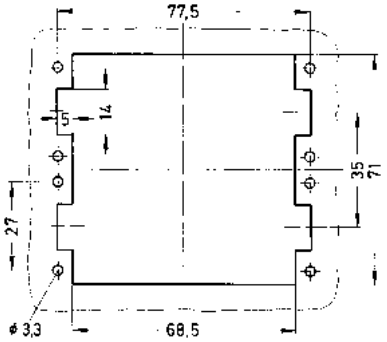 Panel cut out for use without Hoods/Housings

Number of contacts

20+ ⏚

16 A 830 V 8 kV 3
+ 4 additional relay contacts

Identification	Conductor cross-section (mm²)	Part number Male	Part number Female	Drawing (dimensions in mm)
Han® Hv ES , Cage-clamp termination, Contact surface: Silver plated  You need two inserts for a complete assembly!	0,14 ... 2,5	09 34 010 2616	09 34 010 2716	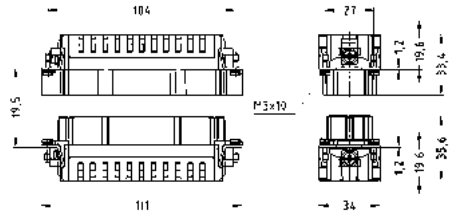 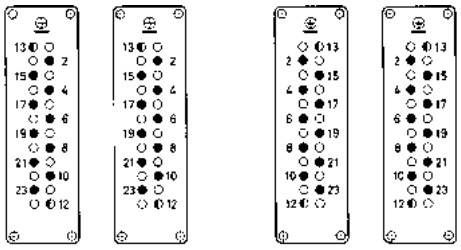 M F Contact arrangement (view from termination side) Han® 20 Hv ES ◆ Power contacts ◐ Relay contact ○ Without contact 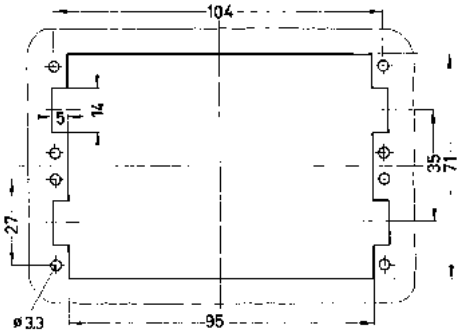 Panel cut out for use without Hoods/Housings

Technical characteristics

Contact resistance	≤1 mΩ
Material (contacts)	Copper alloy
RoHS	compliant with exemption
RoHS exemptions	**6c:** Copper alloy containing up to 4 % lead by weight

Specifications and approvals

EN 60664-1
IEC 61984

Details

Crimping tools see chapter 90

Remarks on the crimp technique
The wire gauges mentioned in the catalogue refer to geometric wire gauges of cables.

Identification	Conductor cross-section (mm²)	Part number Male	Part number Female	Drawing (dimensions in mm)
Han E® , Crimp contact, Contact surface: Silver plated 	0,5 0,75 1 1,5 2,5 3 4	09 33 000 6121 09 33 000 6114 09 33 000 6105 09 33 000 6104 09 33 000 6102 09 33 000 6106 09 33 000 6107	09 33 000 6220 09 33 000 6214 09 33 000 6205 09 33 000 6204 09 33 000 6202 09 33 000 6206 09 33 000 6207	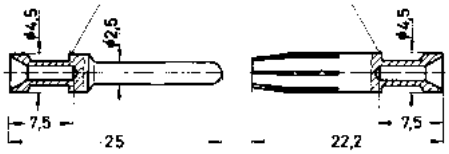
Han E® , Crimp contact, Relay contact , Contact surface: Silver plated 	0,75 ... 1 1,5 2,5	09 33 000 6109 09 33 000 6110 09 33 000 6111		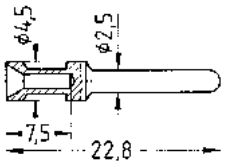

Conductor cross-section		Identification
0.14-0.37 mm²	AWG 26-22	no groove
0.5 mm²	AWG 20	no groove
0.75 mm²	AWG 18	1 groove*
1 mm²	AWG 18	1 groove
1.5 mm²	AWG 16	2 grooves
2.5 mm²	AWG 14	3 grooves
3 mm²	AWG 12	wide groove
4 mm²	AWG 12	no groove
* on the back crimp collar		

Stripping length 7.5 mm

Technical characteristics

Limiting temperature	-40 ... +125 °C
Degree of protection acc. to IEC 60529	IP65
Type rating acc. to UL 50 / UL 50E	4, 4X, 12
Material (hood/housing)	Aluminium die-cast
Surface (hood/housing)	Powder-coated
Colour (hood/housing)	RAL 7037 (dust grey)
Material (seal)	NBR
Material (locking)	Polycarbonate, Stainless steel
Colour (locking)	RAL 7037 (dust grey)
Material flammability class acc. to UL 94 (locking levers)	V-0

Technical characteristics

RoHS	compliant

Specifications and approvals

DNV GL

Details

Special hoods/housings for Han Hv E® screw terminal

Standard hoods/housings see chapter 31

Special hoods/housings for Han Hv E® screw terminal
Double locking lever

Identification	Cable entry	Part number	Drawing (dimensions in mm)
Han Hv E® , Hoods, Top entry 	1x M20 1x M25	19 34 003 0420 19 34 003 0421	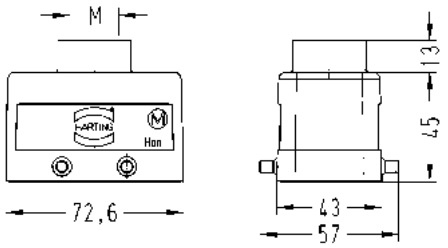
Han Hv E® , Hoods, Side entry 	1x M20	19 34 003 0520	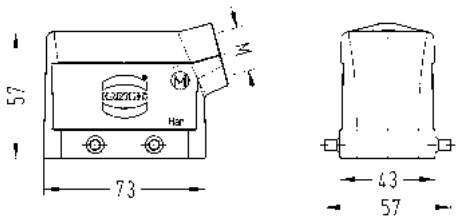
Han Hv E® , Bulkhead mounted housings, Han-Easy Lock® 		09 34 003 0301	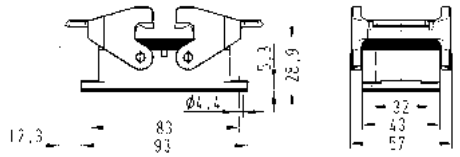 Panel cut out 60 x 35 mm
Han Hv E® , Surface mounted housing, Side entry, Han-Easy Lock® 	2x M20	19 34 003 0270	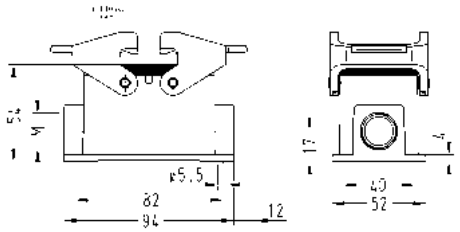
Han Hv E® , Cable to cable housing, Top entry, Han-Easy Lock® 	1x M20 1x M25	19 34 003 0730 19 34 003 0731	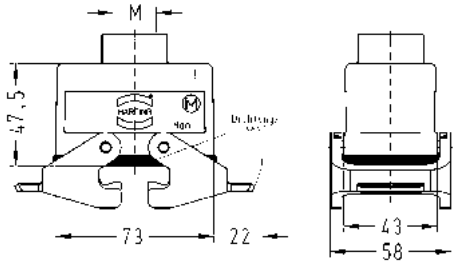

Special hoods/housings for Han Hv E® screw terminal
Double locking lever

Identification	Cable entry	Part number	Drawing (dimensions in mm)
Han Hv E® , Hoods, Top entry 	1x M25	19 34 006 0421	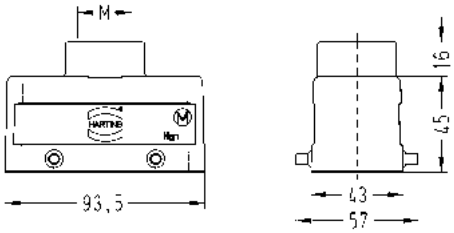
Han Hv E® , Hoods, Side entry 	1x M25	19 34 006 0521	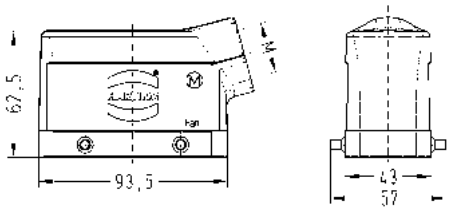
Han Hv E® , Bulkhead mounted housings, Han-Easy Lock® 		09 34 006 0301	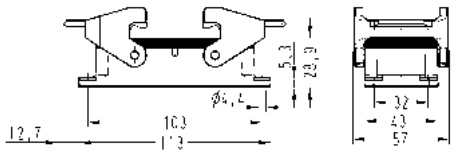 Panel cut out 82 x 35mm
Han Hv E® , Surface mounted housing, Side entry, Han-Easy Lock® 	2x M25	19 34 006 0271	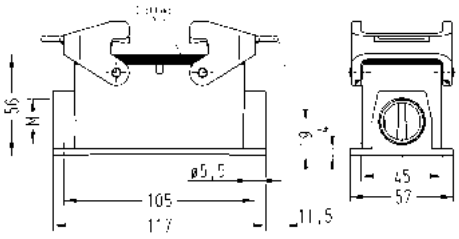
Han Hv E® , Cable to cable housing, Top entry, Han-Easy Lock® 	1x M25 1x M32	19 34 006 0731 19 34 006 0732	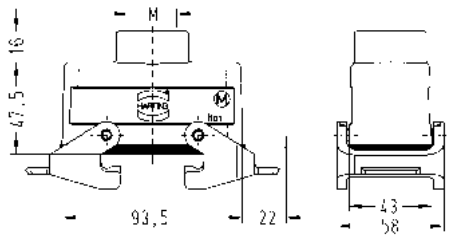

Special hoods/housings for Han Hv E® screw terminal
Double locking lever

Identification	Cable entry	Part number	Drawing (dimensions in mm)
Han Hv E® , Hoods, Top entry 	1x M32	19 34 010 0422	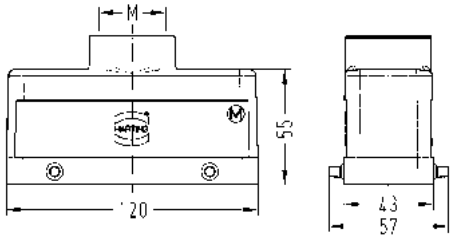
Han Hv E® , Hoods, Side entry 	1x M25	19 34 010 0521	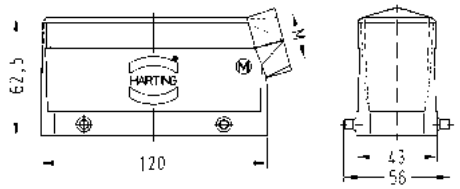
Han Hv E® , Bulkhead mounted housings, Han-Easy Lock® 		09 34 010 0301	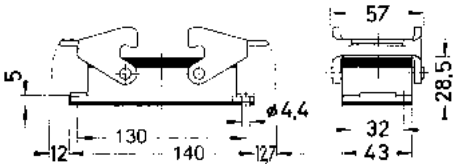 Panel cut out 108 x 35 mm
Han Hv E® , Surface mounted housing, Side entry, Han-Easy Lock® 	2x M25	19 34 010 0271	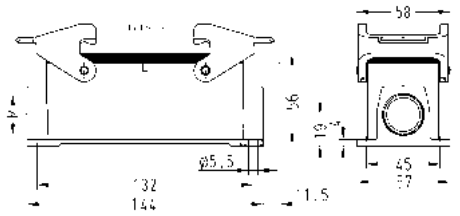
Han Hv E® , Cable to cable housing, Top entry, Han-Easy Lock® 	1x M32	19 34 010 0732	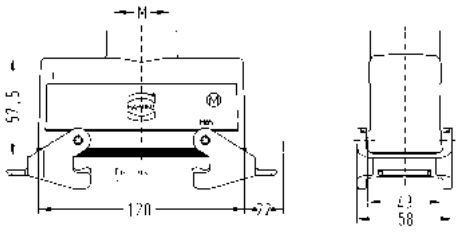

Contents	Page
Han® K 4/4 Axial screw / Cage-clamp	**05.8**
Han® K 8/24 Crimp	**05.11**
Han® K 32/55 Crimp	**05.14**
Han® K 4/0 Screw	**05.17**
Han® K 4/2 Screw	**05.19**
Han® K 6/12 Crimp	**05.21**
Han® K 6/12 Axial screw / Screw	**05.24**
Han® K 6/36 Crimp	**05.26**
Han® K 12/2 Crimp	**05.29**
Han® K 4/8 Screw	**05.32**
Han® K 6/6 Crimp	**05.34**
Han® K 6/6 Axial screw / Screw	**05.37**
Han® K 8/0 Axial screw	**05.39**

Summary

Size	Description				
10 B		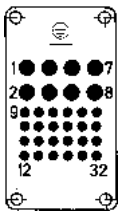	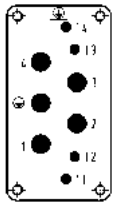	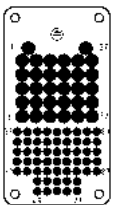	
	Power area Signal area	Han® K 8/24 16 A / 230/400 V 10 A / 160 V	Han® K 4/4 63 A / 690 V 16 A / 230 V	Han® K 32/55 10 A / 250 V 4 A / 50 V	
16 B		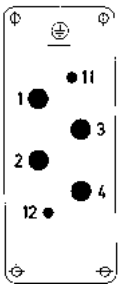	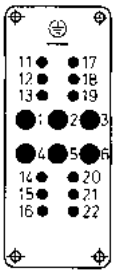	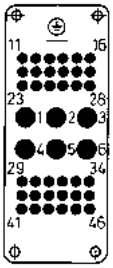	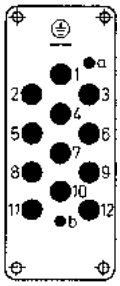
	Power area Signal area	Han® K 4/0, 4/2 80 A / 830 V 16 A / 400 V	Han® K 6/12 40 A / 690 V 10 A / 230/400 V	Han® K 6/36 40 A / 690 V 10 A / 160 V	Han® K 12/2 40 A / 690 V 10 A / 250 V
24 B		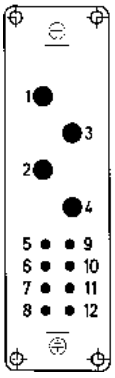	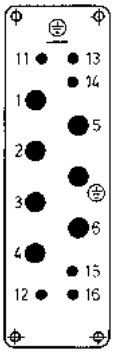	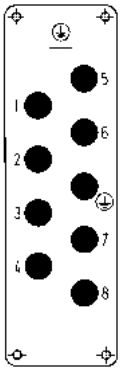	
	Power area Signal area	Han® K 4/8 80 A / 400 V 16 A / 400 V	Han® K 6/6 100 A / 690 V 16 A / 400 V	Han® K 8/0 100 A / 690 V	
32 B	suitable for 2 inserts of size 16 B				
48 B	suitable for 2 inserts of size 24 B				

Summary

Type	Technical characteristics								Suitable Hoods/ Housings
	Power area				Signal area				
	Number of contacts	A	V ~	Termination	Number of contacts	A	V ~	Termination	Size
Han® K 4/0	4+PE	80	830	screw	—	—	—	—	16 B, 32 B
Han® K 4/2	4+PE	80	830	screw	2	16	400	screw	16 B, 32 B
Han® K 4/4	4+PE	63	690	axial screw	4	16	250	cage clamp	10 B
Han® K 4/8	4+PE	80	400	screw	8	16	400	screw	24 B, 48 B
Han® K 6/6	6+PE	100	690	crimp	6	16	400	crimp	24 B, 48 B
Han® K 6/6	6+PE	100	690	axial screw	6	16	400	screw	24 B, 48 B
Han® K 6/12	6+PE	40	690	crimp	12	10	230/400	crimp	16 B, 32 B
Han® K 6/12	6+PE	40	690	axial screw	12	10	230/400	screw	16 B, 32 B
Han® K 6/36	6+PE	40	690	crimp	36	10	160	crimp	16 B, 32 B
Han® K 8/0	8+PE	100	690	axial screw	—	—	—	—	24 B, 48 B
Han® K 8/24	8+PE	16	230/400	crimp	24	10	160	crimp	10 B
Han® K 12/2	12+PE	40	690	crimp	2	10	250	crimp	16 B, 32 B
Han® K 32/55	32+PE	10	250	crimp	55	4	50	crimp	10 B

Type identification

Han® K 6/12

Han®	Industrial connectors Han®
K	Series Han® K / Han-Com®
6	Number of power contacts
12	Number of signal contacts

Identification of contact position

Han® K connectors	from 1 to ... (power area) from 11 to... (signal area)
Exceptions	
Han® K 4/8 and Han® K 8/24	from 1 to ... (consecutively)
Han® K 12/2	from 1 to 12 (power area) with „a“ and „b“ (signal area)

Comment for users

For the combination of several circuits in one cable and/or e.g. one connector the following standards are valid:
DIN VDE 0100-410/06.2007 § 411.3.1.1 and DIN EN 60 204/06.2007 § 13.1.3

Accessories

Crimping tools	chapter 90
Cable clamps	chapter 80
Coding of hoods/housings	chapter 80
Label acc. to CSA-approval	chapter 80
Han-Snap®	chapter 11
PCB adapter	chapter 80

Description	Depiction	Dimensions in mm

Step 1:

Signal contacts:
Push screwdriver (0.5 x 3.5) into rectangular chamber. Strip insulation from the wire with a length and insert the wire into the round contact chamber.

Power contacts:
Strip insulation from the wire with a length and insert the wire into the contact chamber until insulation is flush with contact.
Do not twist the strands of the wire.

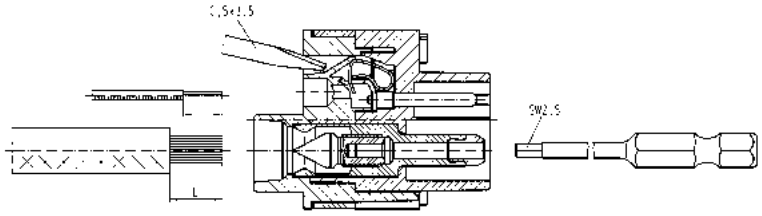

l: Stripping length for signal contacts

L: Stripping length for power contacts

Step 2:

Signal contacts:
Push screwdriver (0.5 x 3.5) out of rectangular chamber.

Power contacts:
Hold the wire in position and tighten by a hexagonal driver (SW 2.5) from the mating side with a tightening torque.

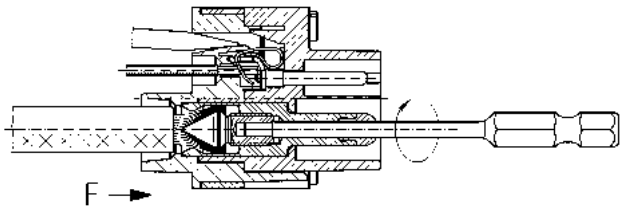

Step 3:

Complete connection

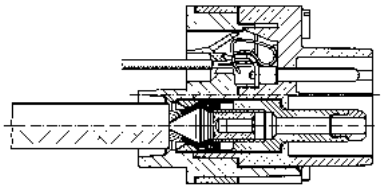

The male insert is shown. The same method is applicable for female inserts.

Assembly instructions Han® K 6/12

Description	Depiction	Dimensions in mm

Step 1:

Signal contacts:
Strip insulation from the wire with a length and insert the wire into the rectangular contact chamber.

Power contacts:
Strip insulation from the wire with a length and insert the wire into the contact chamber until insulation is flush with contact.
Do not twist the strands of the wire.

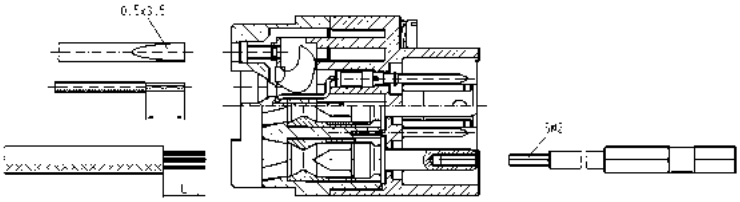

I: Stripping length for signal contacts

L: Stripping length for power contacts

Step 2:

Signal contacts:
Tighten screw termination with screwdriver (0.5 x 3.5) with a tightening torque.

Power contacts:
Hold the wire in position and tighten by a hexagonal driver (SW 2) from the mating side with a tightening torque.

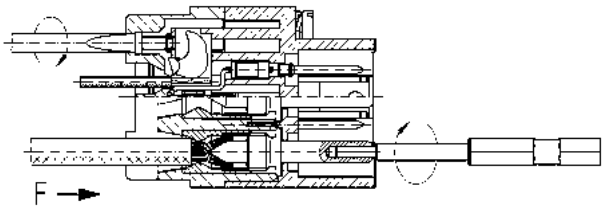

Step 3:

Complete connection

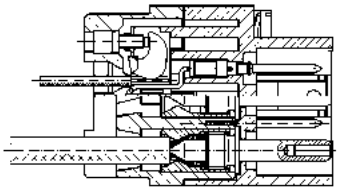

The male insert is shown. The same method is applicable for female inserts.

Assembly instructions Han® K 6/6

Description	Depiction	Dimensions in mm

Step 1:

Signal contacts:
Strip insulation from the wire with a length and insert the wire into the rectangular contact chamber.

Power contacts:
Strip insulation from the wire with a length and insert the wire into the contact chamber until insulation is flush with contact.
Do not twist the strands of the wire.

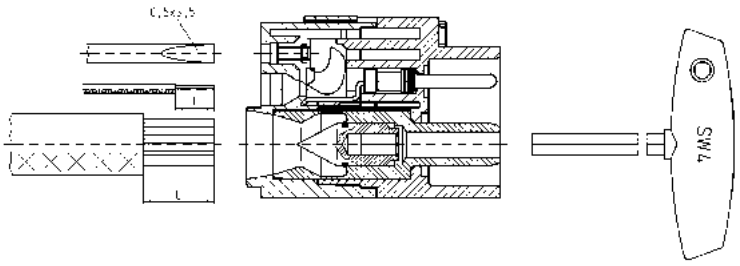

I: Stripping length for signal contacts

L: Stripping length for power contacts

Step 2:

Signal contacts:
Tighten screw termination with screwdriver (0.5 x 3.5) with a tightening torque.

Power contacts:
Hold the wire in position and tighten by a hexagonal driver (SW 4) from the mating side with a tightening torque.

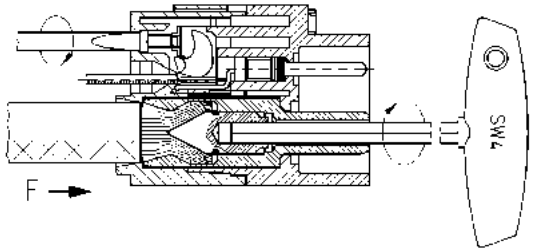

Step 3:

Complete connection

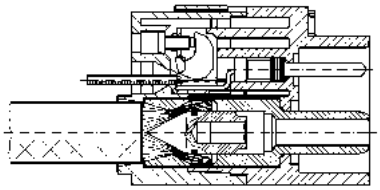

The male insert is shown. The same method is applicable for female inserts.

Assembly instructions Han® K 8/0

Description	Depiction	Dimensions in mm

Step 1:
Strip insulation from the wire with a length and insert the wire into the contact chamber until insulation is flush with contact.
Do not twist the strands of the wire.

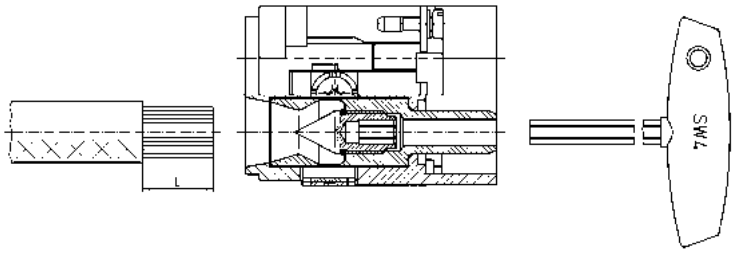

L: Stripping length for power contacts

Step 2:
Hold the wire in position and tighten by a hexagonal driver (SW 4) from the mating side with a tightening torque.

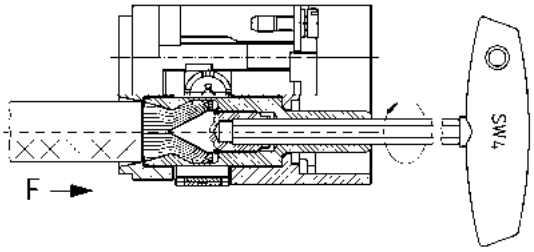

Step 3:
Complete connection

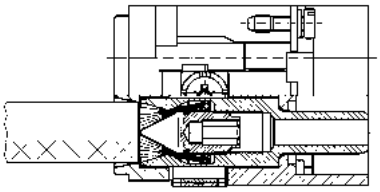

The male insert is shown. The same method is applicable for female inserts.

Han® K 4/4 Axial screw / Cage-clamp

Features

- Combination of signal and power in one connector
- Axial screw termination for power area
- Cage clamp termination for signal area
- Same range of cross-section for PE contacts and power contacts

Technical characteristics

Number of contacts	4
Additional contacts	+ 4 additional signal contacts
Electrical data acc. to IEC 61984	63 A 690 V 8 kV 3
Rated current	63 A
Rated voltage	690 V
Rated impulse voltage	8 kV
Pollution degree	3
Electrical data, signal	16 A 250 V 4 kV 3
Rated current (signal)	16 A
Rated voltage (signal)	250 V
Rated impulse voltage (signal)	4 kV
Pollution degree (signal)	3
Rated current acc. to UL	63 A
Rated current acc. to UL (signal)	16 A
Rated current acc. to CSA	63 A
Rated current acc. to CSA (signal)	16 A
Rated voltage acc. to UL	600 V
Rated voltage acc. to UL (signal)	230 V
Rated voltage acc. to CSA	600 V
Rated voltage acc. to CSA (signal)	230 V
Insulation resistance	≥10^{10} Ω
Contact resistance	≤0.5 mΩ
Contact resistance, signal area	≤3 mΩ
Limiting temperature	-40 ... +125 °C
Mating cycles	≥500
Wire outer diameter	≤8,9 mm, ≤11 mm @ 22 mm²
Material (insert)	Polycarbonate
Colour (insert)	RAL 7032 (pebble grey)
Material (contacts)	Copper alloy
Material flammability class acc. to UL 94	V-0
RoHS	compliant with exemption
RoHS exemptions	**6a:** Lead as an alloying element in steel for machining purposes and in galvanised steel containing up to 0,35 % lead by weight, **6c:** Copper alloy containing up to 4 % lead by weight

Derating

Current carrying capacity

The current carrying capacity of the connectors is limited by the thermal load capability of the contact element material including the connections and the insulating parts. The derating curve is therefore valid for currents which flow constantly (non-intermittent) through each contact element of the connector evenly, without exceeding the allowed maximum temperature.

Measuring and testing techniques acc. to IEC 60512-5-2

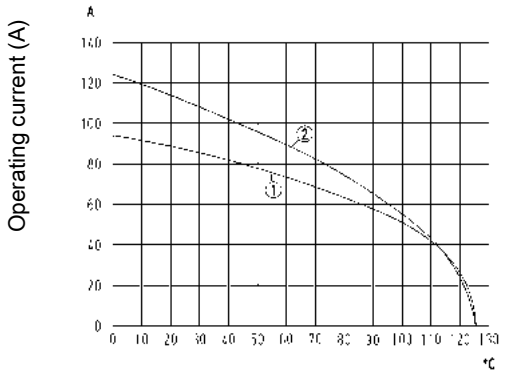

① Conductor cross-section 16 mm²
② Conductor cross-section 22 mm²

Specifications and approvals

EN 60664-1
IEC 61984
UL 1977 ECBT2.E235076
CSA-C22.2 No. 182.3 ECBT8.E235076
DNV GL

Details

Hoods/Housings see chapter 31

Hex key (A/F 2.5) see chapter 90

Remarks on the axial screw technique

The wire gauges mentioned in the catalogue refer to geometric wire gauges of cables.

Han® K 4/4 Axial screw / Cage-clamp Size 10 B

Number of contacts

4+ ⏚

63 A 690 V 8 kV 3
+ 4 additional signal contacts
16 A 250 V 4 kV 3

Identification	Conductor cross-section (mm²)	Part number Male	Part number Female	Drawing (dimensions in mm)
Han-Com® , Han® K 4/4, Axial screw termination / cage-clamp termination, Contact surface: Silver plated  Finger safe	6 ... 16, 0,14 ... 2,5 Signal	09 38 008 2601	09 38 008 2701	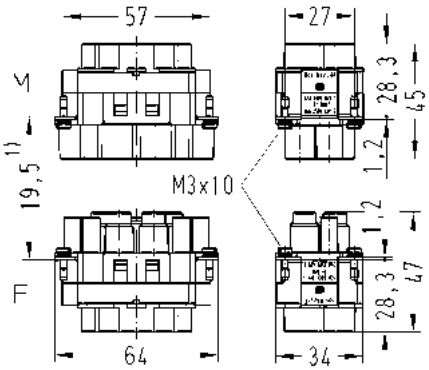 1) distance for contact max. 21 mm
Han-Com® , Han® K 4/4, Axial screw termination / cage-clamp termination, Contact surface: Silver plated  Not finger safe	6 ... 16, 0,14 ... 2,5 Signal	09 38 008 2611		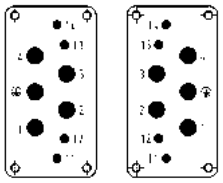 Contact arrangement (view from termination side)

power contacts		
wire gauge	tightening tourque	stripping length
6 mm²	2 Nm	11 ... 12 mm
10 mm²	3 Nm	11 ... 12 mm
16 mm²	4 Nm	11 ... 12 mm
22 mm²	4 Nm	13 ... 14 mm

Signal contacts :
Stripping length 7 ... 9 mm

Han® K 4/4 Axial screw / Cage-clamp Size 10 B

Number of contacts

4+ ⏚

63 A 690 V 8 kV 3
+ 4 additional signal contacts
16 A 250 V 4 kV 3

Identification	Conductor cross-section (mm²)	Part number Male	Part number Female	Drawing (dimensions in mm)
Han-Com® , Han® K 4/4, Axial screw termination / cage-clamp termination, Contact surface: Silver plated  Finger safe	10 ... 22, 0,14 ... 2,5 Signal	09 38 008 2602	09 38 008 2702	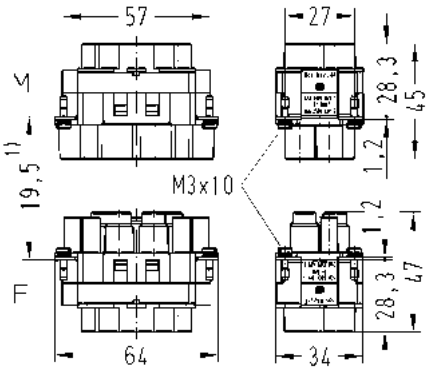 1) distance for contact max. 21 mm
Han-Com® , Han® K 4/4, Axial screw termination / cage-clamp termination, Contact surface: Silver plated  Not finger safe	10 ... 22, 0,14 ... 2,5 Signal	09 38 008 2612		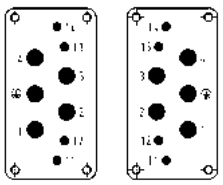 Contact arrangement (view from termination side) power contacts wire gauge / tightening tourque / stripping length 6 mm² / 2 Nm / 11 ... 12 mm 10 mm² / 3 Nm / 11 ... 12 mm 16 mm² / 4 Nm / 11 ... 12 mm 22 mm² / 4 Nm / 13 ... 14 mm Signal contacts : Stripping length 7 ... 9 mm

Han® K 8/24 Crimp

Features

- Combination of signal and power in one connector
- Crimp termination for power and signal area
- Use of standard Han E® and Han D® contacts

Technical characteristics

Number of contacts	8
Additional contacts	+ 24 additional signal contacts
Electrical data acc. to IEC 61984	16 A 230/400 V 4 kV 3
Rated current	16 A
Rated voltage conductor-earth	230 V
Rated voltage conductor-conductor	400 V
Rated impulse voltage	4 kV
Pollution degree	3
Electrical data, signal	10 A 160 V 2,5 kV 3
Rated current (signal)	10 A
Rated voltage (signal)	160 V
Rated impulse voltage (signal)	2.5 kV
Pollution degree (signal)	3
Rated current acc. to UL	16 A
Rated current acc. to UL (signal)	10 A
Rated current acc. to CSA	16 A
Rated current acc. to CSA (signal)	10 A
Rated voltage acc. to UL	600 V
Rated voltage acc. to UL (signal)	600 V
Rated voltage acc. to CSA	300 V
Rated voltage acc. to CSA (signal)	300 V
Insulation resistance	≥10^{10} Ω
Contact resistance	≤3 mΩ, ≤1 mΩ
Limiting temperature	-40 ... +125 °C
Mating cycles	≥500
Material (insert)	Polyamide
Colour (insert)	RAL 7032 (pebble grey)
Material (contacts)	Copper alloy
Material flammability class acc. to UL 94	HB
RoHS	compliant, compliant with exemption
RoHS exemptions	**6c:** Copper alloy containing up to 4 % lead by weight

Derating

Current carrying capacity

The current carrying capacity of the connectors is limited by the thermal load capability of the contact element material including the connections and the insulating parts. The derating curve is therefore valid for currents which flow constantly (non-intermittent) through each contact element of the connector evenly, without exceeding the allowed maximum temperature.

Measuring and testing techniques acc. to IEC 60512-5-2

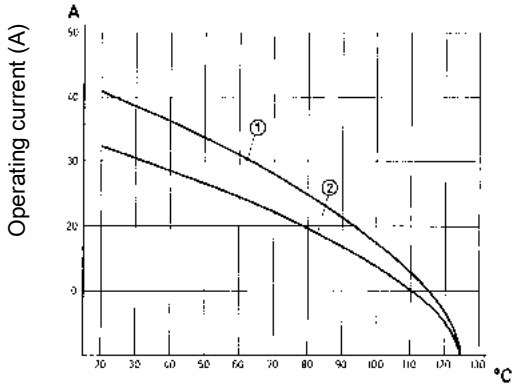

Ambient temperature (°C)

① Conductor cross-section 4 mm²
② Conductor cross-section 2.5 mm²

Specifications and approvals

EN 60664-1
IEC 61984
UL 1977 ECBT2.E235076
CSA-C22.2 No. 182.3 ECBT8.E235076
DNV GL

Details

Hoods/Housings see chapter 31

Contact resistance Han D® crimp contact: ≤ 3 mOhm

Contact resistance Han E® crimp contact: ≤ 1 mOhm

Crimping tools see chapter 90

Remarks on the crimp technique

The wire gauges mentioned in the catalogue refer to geometric wire gauges of cables.

Removal of power contacts (Han E®)



① Push cross-slotted screw driver (size 0) in the relevant hole of the contact until it reaches the bottom
② Withdraw the crimped contact from the insert

Number of contacts

8+ ⏚

16 A 230/400 V 4 kV 3
+ 24 additional signal contacts
10 A 160 V 2,5 kV 3

Identification	Conductor cross-section (mm²)	Part number Male	Part number Female	Drawing (dimensions in mm)
Han-Com® , Han® K 8/24, Crimp termination 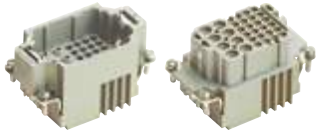 Please order crimp contacts separately.	0,5 ... 4, 0,14 ... 2,5 Signal	09 38 032 3001	09 38 032 3101	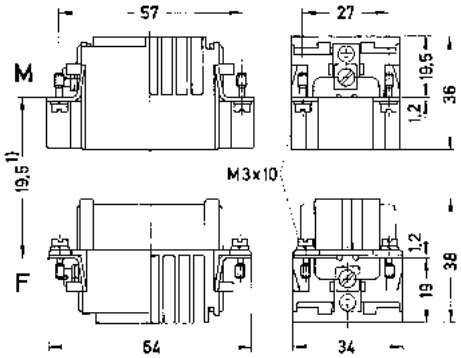 1) distance for contact max. 21 mm 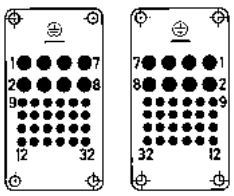 Contact arrangement (view from termination side)
Han D® , Crimp contact, Contact surface: Silver plated 	0,14 ... 0,37 0,5 0,75 1 1,5 2,5	09 15 000 6104 09 15 000 6103 09 15 000 6105 09 15 000 6102 09 15 000 6101 09 15 000 6106	09 15 000 6204 09 15 000 6203 09 15 000 6205 09 15 000 6202 09 15 000 6201 09 15 000 6206	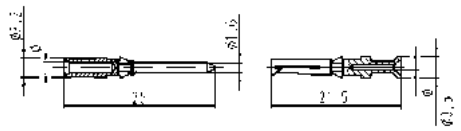 Wire gauge / ⌀ / Stripping length 0.14-0.37 mm² AWG 26-22 — 0.9 mm — 8 mm 0.5 mm² AWG 20 — 1.1 mm — 8 mm 0.75 mm² AWG 18 — 1.3 mm — 8 mm 1 mm² AWG 18 — 1.45 mm — 8 mm 1.5 mm² AWG 16 — 1.75 mm — 8 mm 2.5 mm² AWG 14 — 2.25 mm — 6 mm
Han D® , Crimp contact, Contact surface: Gold plated 	0,14 ... 0,37 0,5 0,75 1 1,5 2,5	09 15 000 6124 09 15 000 6123 09 15 000 6125 09 15 000 6122 09 15 000 6121 09 15 000 6126	09 15 000 6224 09 15 000 6223 09 15 000 6225 09 15 000 6222 09 15 000 6221 09 15 000 6226	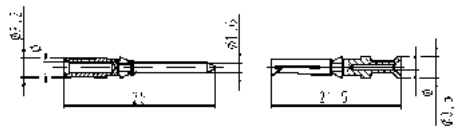 Wire gauge / ⌀ / Stripping length 0.14-0.37 mm² AWG 26-22 — 0.9 mm — 8 mm 0.5 mm² AWG 20 — 1.1 mm — 8 mm 0.75 mm² AWG 18 — 1.3 mm — 8 mm 1 mm² AWG 18 — 1.45 mm — 8 mm 1.5 mm² AWG 16 — 1.75 mm — 8 mm 2.5 mm² AWG 14 — 2.25 mm — 6 mm

Identification	Conductor cross-section (mm²)	Part number Male	Part number Female	Drawing (dimensions in mm)
Han E® , Crimp contact, Contact surface: Silver plated 	0,5 0,75 1 1,5 2,5 4	09 33 000 6121 09 33 000 6114 09 33 000 6105 09 33 000 6104 09 33 000 6102 09 33 000 6107	09 33 000 6220 09 33 000 6214 09 33 000 6205 09 33 000 6204 09 33 000 6202 09 33 000 6207	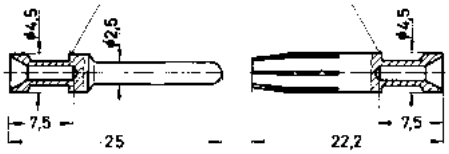 Conductor cross-section / Identification 0.14-0.37 mm² AWG 26-22 — no groove 0.5 mm² AWG 20 — no groove 0.75 mm² AWG 18 — 1 groove* 1 mm² AWG 18 — 1 groove 1.5 mm² AWG 16 — 2 grooves 2.5 mm² AWG 14 — 3 grooves 3 mm² AWG 12 — wide groove 4 mm² AWG 12 — no groove * on the back crimp collar Stripping length 7.5 mm
Han E® , Crimp contact, Contact surface: Gold plated 	0,5 0,75 1 1,5 2,5 4	09 33 000 6122 09 33 000 6115 09 33 000 6118 09 33 000 6116 09 33 000 6123 09 33 000 6119	09 33 000 6222 09 33 000 6215 09 33 000 6218 09 33 000 6216 09 33 000 6223 09 33 000 6221	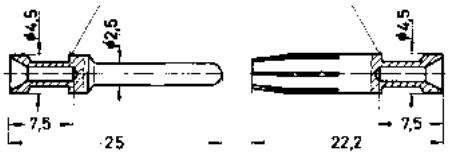 Conductor cross-section / Identification 0.14-0.37 mm² AWG 26-22 — no groove 0.5 mm² AWG 20 — no groove 0.75 mm² AWG 18 — 1 groove* 1 mm² AWG 18 — 1 groove 1.5 mm² AWG 16 — 2 grooves 2.5 mm² AWG 14 — 3 grooves 3 mm² AWG 12 — wide groove 4 mm² AWG 12 — no groove * on the back crimp collar Stripping length 7.5 mm
Han E® , Crimp contact, Relay contact , Contact surface: Silver plated 	0,75 ... 1 1,5 2,5	09 33 000 6109 09 33 000 6110 09 33 000 6111		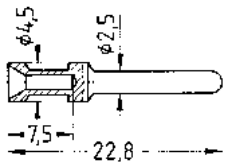
FO contact, for 1 mm plastic fibre 		20 10 001 3211	20 10 001 3221	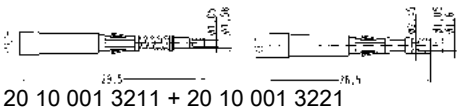 20 10 001 3211 + 20 10 001 3221

Han® K 32/55 Crimp

Features

- Combination of signal and power in one connector
- Crimp termination for power and signal area
- Use of standard Han D® and Han® D-sub contacts

Technical characteristics

Number of contacts	32
Additional contacts	+ 55 additional signal contacts
Electrical data acc. to IEC 61984	10 A 250 V 4 kV 2
Rated current	10 A
Rated voltage	250 V
Rated impulse voltage	4 kV
Pollution degree	2
Electrical data, signal	4 A 50 V 0,8 kV 2
Rated current (signal)	4 A
Rated voltage (signal)	50 V
Rated impulse voltage (signal)	0.8 kV
Pollution degree (signal)	2
Insulation resistance	≥10^{10} Ω
Contact resistance	≤3 mΩ, ≤10 mΩ
Limiting temperature	-40 ... +125 °C
Mating cycles	≥500
Material (insert)	Polycarbonate
Colour (insert)	RAL 7032 (pebble grey)
Material (contacts)	Copper alloy
Material flammability class acc. to UL 94	V-0
RoHS	compliant, compliant with exemption
RoHS exemptions	**6c:** Copper alloy containing up to 4 % lead by weight

Specifications and approvals

EN 60664-1
IEC 61984

Details

Contact resistance Han D® crimp contact: ≤ 3 mOhm

Contact resistance D-Sub crimp contact: ≤ 10 mOhm

Crimping tools see chapter 90

Remarks on the crimp technique
The wire gauges mentioned in the catalogue refer to geometric wire gauges of cables.

Number of contacts

32+ ⏚

10 A 250 V 4 kV 2
+ 55 additional signal contacts
4 A 50 V 0,8 kV 2

Identification	Conductor cross-section (mm²)	Part number Male	Part number Female	Drawing (dimensions in mm)
Han-Com® , Han® K 32/55, Crimp termination 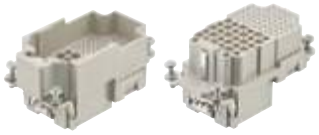 Please order crimp contacts separately.	0,14 ... 2,5, 0,09 ... 0,52 Signal	09 38 087 3001	09 38 087 3101	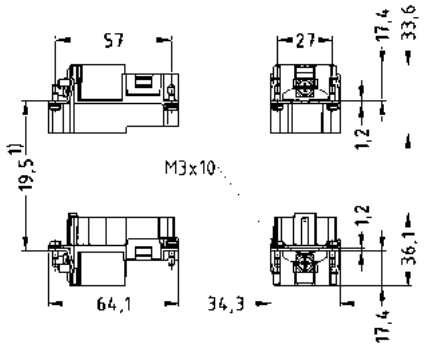
Han D® , Crimp contact, Contact surface: Silver plated 	0,14 ... 0,37 0,5 0,75 1 1,5 2,5	09 15 000 6104 09 15 000 6103 09 15 000 6105 09 15 000 6102 09 15 000 6101 09 15 000 6106	09 15 000 6204 09 15 000 6203 09 15 000 6205 09 15 000 6202 09 15 000 6201 09 15 000 6206	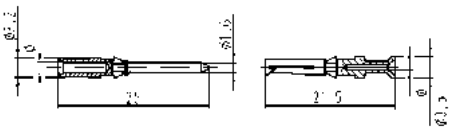 Wire gauge / ⌀ / Stripping length 0.14-0.37 mm² AWG 26-22 — 0.9 mm — 8 mm 0.5 mm² AWG 20 — 1.1 mm — 8 mm 0.75 mm² AWG 18 — 1.3 mm — 8 mm 1 mm² AWG 18 — 1.45 mm — 8 mm 1.5 mm² AWG 16 — 1.75 mm — 8 mm 2.5 mm² AWG 14 — 2.25 mm — 6 mm
Han D® , Crimp contact, Contact surface: Gold plated 	0,14 ... 0,37 0,5 0,75 1 1,5 2,5	09 15 000 6124 09 15 000 6123 09 15 000 6125 09 15 000 6122 09 15 000 6121 09 15 000 6126	09 15 000 6224 09 15 000 6223 09 15 000 6225 09 15 000 6222 09 15 000 6221 09 15 000 6226	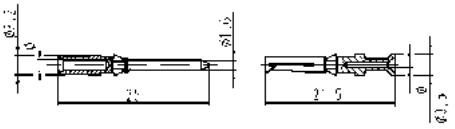 Wire gauge / ⌀ / Stripping length 0.14-0.37 mm² AWG 26-22 — 0.9 mm — 8 mm 0.5 mm² AWG 20 — 1.1 mm — 8 mm 0.75 mm² AWG 18 — 1.3 mm — 8 mm 1 mm² AWG 18 — 1.45 mm — 8 mm 1.5 mm² AWG 16 — 1.75 mm — 8 mm 2.5 mm² AWG 14 — 2.25 mm — 6 mm

Identification	Conductor cross-section (mm²)	Part number Male	Part number Female	Drawing (dimensions in mm)
D-Sub , Standard, Crimp contact, Turned , Pack contents: Single contact	0,09 ... 0,25 0,13 ... 0,33 0,25 ... 0,52	09 67 000 7576 09 67 000 5576 09 67 000 8576	09 67 000 7476 09 67 000 5476 09 67 000 8476	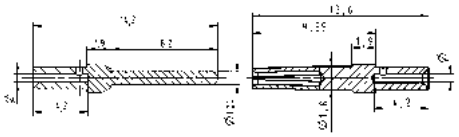

Wire gauge	ø	Stripping length
0.09-0.25 mm²	0.64 mm	4 mm
0.13-0.33 mm²	0.88 mm	4 mm
0.25-0.52 mm²	1.13 mm	4 mm
0.33-0.82 mm²	1.34 mm	4 mm

for stranded wire according IEC 60228 Class 5

Han® K 4/0 Screw

Features

- Screw termination
- No signal contacts

Technical characteristics

Number of contacts	4
Electrical data acc. to IEC 61984	80 A 830 V 8 kV 3
Rated current	80 A
Rated voltage	830 V
Rated impulse voltage	8 kV
Pollution degree	3
Rated current acc. to UL	80 A
Rated current acc. to CSA	80 A
Rated voltage acc. to UL	600 V
Rated voltage acc. to CSA	300 V
Insulation resistance	≥10^{10} Ω
Contact resistance	≤0.3 mΩ
Limiting temperature	-40 ... +125 °C
Mating cycles	≥500
Material (insert)	Polycarbonate
Colour (insert)	RAL 7032 (pebble grey)
Material (contacts)	Copper alloy
Material flammability class acc. to UL 94	V-0
RoHS	compliant with exemption
RoHS exemptions	**6a:** Lead as an alloying element in steel for machining purposes and in galvanised steel containing up to 0,35 % lead by weight, **6c:** Copper alloy containing up to 4 % lead by weight

Derating

Current carrying capacity

The current carrying capacity of the connectors is limited by the thermal load capability of the contact element material including the connections and the insulating parts. The derating curve is therefore valid for currents which flow constantly (non-intermittent) through each contact element of the connector evenly, without exceeding the allowed maximum temperature.

Measuring and testing techniques acc. to IEC 60512-5-2

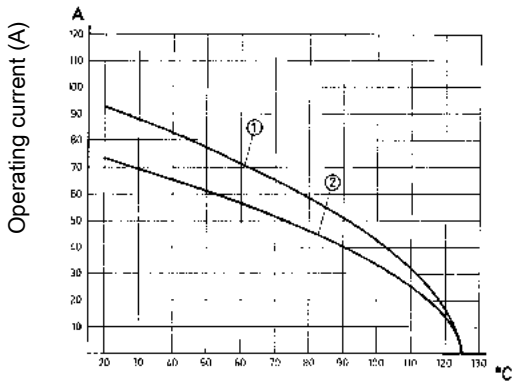

Ambient temperature (°C)

① Conductor cross-section 16 mm²
② Conductor cross-section 10 mm²

Specifications and approvals

EN 60664-1
IEC 61984
UL 1977 ECBT2.E235076
CSA-C22.2 No. 182.3 ECBT8.E235076
DNV GL

Details

Hoods/Housings see chapter 31

In accordance with the appropriate regulations a wire-end sleeve has to be used at clamps without wire protection (see “screw terminal”, chapter 00).

Han® K 4/0 Screw

Size 16 B

Number of contacts

4+ ⏚

80 A 830 V 8 kV 3

Identification	Conductor cross-section (mm²)	Part number Male	Part number Female	Drawing (dimensions in mm)
Han-Com® , Han® K 4/0, Screw termination, Contact surface: Silver plated 	1,5 ... 16	09 38 006 2611	09 38 006 2711	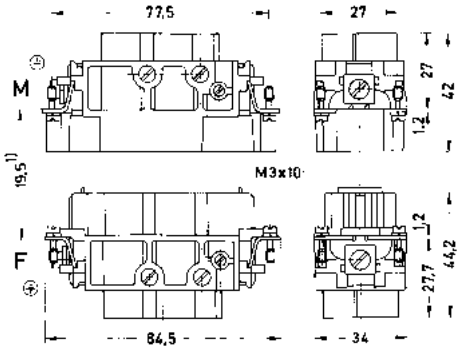 1) distance for contact max. 21 mm 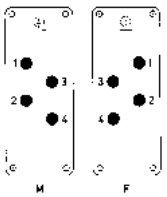 Contact arrangement (view from termination side)

power contacts		
wire gauge	tightening tourque	stripping length
1.5 mm²	1.2 Nm	14 mm
2.5 mm²	2 Nm	14 mm
4 mm²	3 Nm	14 mm
6 mm²	3 Nm	14 mm
10 mm²	3 Nm	14 mm
16 mm²	3 Nm	14 mm

Features

- Combination of signal and power in one connector
- Screw termination for power and signal area

Technical characteristics

Number of contacts	4
Additional contacts	+ 2 additional signal contacts
Electrical data acc. to IEC 61984	80 A 830 V 8 kV 3
Rated current	80 A
Rated voltage	830 V
Rated impulse voltage	8 kV
Pollution degree	3
Electrical data, signal	16 A 400 V 6 kV 3
Rated current (signal)	16 A
Rated voltage (signal)	400 V
Rated impulse voltage (signal)	6 kV
Pollution degree (signal)	3
Rated current acc. to UL	80 A
Rated current acc. to UL (signal)	16 A
Rated current acc. to CSA	80 A
Rated current acc. to CSA (signal)	16 A
Rated voltage acc. to UL	600 V
Rated voltage acc. to UL (signal)	600 V
Rated voltage acc. to CSA	300 V
Rated voltage acc. to CSA (signal)	300 V
Insulation resistance	≥10^{10} Ω
Contact resistance	≤0.3 mΩ
Contact resistance, signal area	≤1 mΩ
Limiting temperature	-40 ... +125 °C
Mating cycles	≥500
Material (insert)	Polycarbonate
Colour (insert)	RAL 7032 (pebble grey)
Material (contacts)	Copper alloy
Material flammability class acc. to UL 94	V-0
RoHS	compliant with exemption
RoHS exemptions	**6a:** Lead as an alloying element in steel for machining purposes and in galvanised steel containing up to 0,35 % lead by weight, **6c:** Copper alloy containing up to 4 % lead by weight

Derating

Current carrying capacity

The current carrying capacity of the connectors is limited by the thermal load capability of the contact element material including the connections and the insulating parts. The derating curve is therefore valid for currents which flow constantly (non-intermittent) through each contact element of the connector evenly, without exceeding the allowed maximum temperature.

Measuring and testing techniques acc. to IEC 60512-5-2

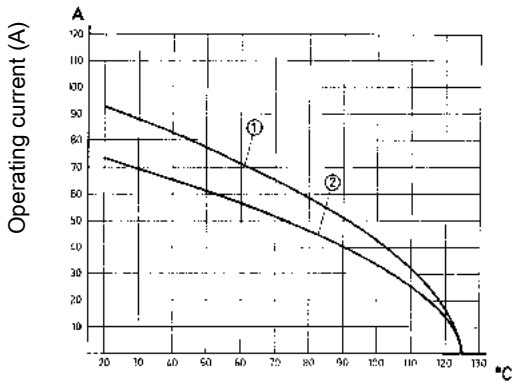

Ambient temperature (°C)

① Conductor cross-section 16 mm²
② Conductor cross-section 10 mm²

Specifications and approvals

EN 60664-1
IEC 61984
UL 1977 ECBT2.E235076
CSA-C22.2 No. 182.3 ECBT8.E235076
DNV GL

Details

Hoods/Housings see chapter 31

In accordance with the appropriate regulations a wire-end sleeve has to be used at clamps without wire protection (see “screw terminal”, chapter 00).

Number of contacts

4+ ⏚

80 A 830 V 8 kV 3
+ 2 additional signal contacts
16 A 400 V 6 kV 3

Identification	Conductor cross-section (mm²)	Part number Male	Part number Female	Drawing (dimensions in mm)
Han-Com® , Han® K 4/2, Screw termination, Contact surface: Silver plated 	1,5 ... 16, 0,5 ... 2,5 Signal	09 38 006 2601	09 38 006 2701	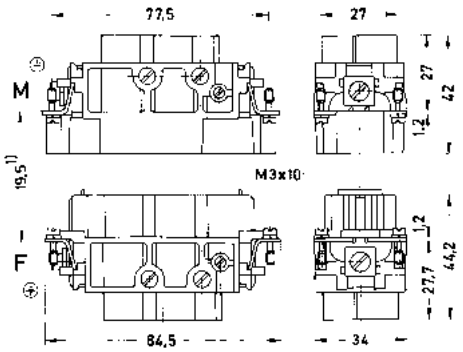 1) distance for contact max. 21 mm 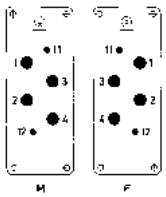 Contact arrangement (view from termination side)

power contacts		
wire gauge	tightening tourque	stripping length
1.5 mm²	1.2 Nm	14 mm
2.5 mm²	2 Nm	14 mm
4 mm²	3 Nm	14 mm
6 mm²	3 Nm	14 mm
10 mm²	3 Nm	14 mm
16 mm²	3 Nm	14 mm

Signal contacts :
Stripping length 7.5 mm
Tightening torque 0.5 Nm

Han® K 6/12 Crimp

Features

- Combination of signal and power in one connector
- Crimp termination for power and signal area
- Use of standard Han® C and Han D® contacts
- 16 coding options

Technical characteristics

Number of contacts	6
Additional contacts	+ 12 additional signal contacts
Electrical data acc. to IEC 61984	40 A 690 V 8 kV 3
Rated current	40 A
Rated voltage	690 V
Rated impulse voltage	8 kV
Pollution degree	3
Electrical data, signal	10 A 230/400 V 4 kV 3
Rated current (signal)	10 A
Rated voltage conductor-earth (signal)	230 V
Rated voltage conductor-conductor (signal)	400 V
Rated impulse voltage (signal)	4 kV
Pollution degree (signal)	3
Rated current acc. to UL	40 A
Rated current acc. to UL (signal)	10 A
Rated current acc. to CSA	40 A
Rated current acc. to CSA (signal)	10 A
Rated voltage acc. to UL	600 V
Rated voltage acc. to UL (signal)	600 V
Rated voltage acc. to CSA	300 V
Rated voltage acc. to CSA (signal)	300 V
Insulation resistance	≥10^{10} Ω
Contact resistance	≤1 mΩ, ≤3 mΩ
Limiting temperature	-40 ... +125 °C
Mating cycles	≥500
Wire outer diameter	≤5 mm
Material (insert)	Polycarbonate
Colour (insert)	RAL 7032 (pebble grey)
Material (contacts)	Copper alloy
Material (accessories)	Thermoplastic
Material flammability class acc. to UL 94	V-0
RoHS	compliant with exemption, compliant
RoHS exemptions	**6c:** Copper alloy containing up to 4 % lead by weight

Specifications and approvals

EN 60664-1
IEC 61984
UL 1977 ECBT2.E235076
CSA-C22.2 No. 182.3 ECBT8.E235076
DNV GL

Details

Contact resistance Han® C crimp contact: ≤ 1 mOhm

Contact resistance Han D® crimp contact: ≤ 3 mOhm

Crimping tools see chapter 90

Remarks on the crimp technique
The wire gauges mentioned in the catalogue refer to geometric wire gauges of cables.

Han® K 6/12 Crimp

Size 16 B

Number of contacts

6+ ⏚

40 A 690 V 8 kV 3
+ 12 additional signal contacts
10 A 230/400 V 4 kV 3

Identification	Conductor cross-section (mm²)	Part number Male	Part number Female	Drawing (dimensions in mm)
Han-Com® , Han® K 6/12, Crimp termination  Please order crimp contacts separately. Please order coding pins separately.	1,5 ... 6, 0,14 ... 2,5 Signal	09 38 018 3002	09 38 018 3102	
Han® C , Crimp contact, Contact surface: Silver plated 	1,5 2,5 4 6	09 32 000 6104 09 32 000 6105 09 32 000 6107 09 32 000 6108	09 32 000 6204 09 32 000 6205 09 32 000 6207 09 32 000 6208	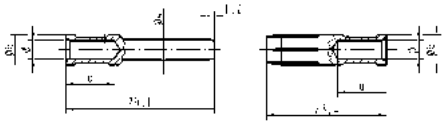 Conductor cross-section / Ø / Stripping length 1.5 mm² AWG 16 — 1.75 mm — 9.5 mm 2.5 mm² AWG 14 — 2.25 mm — 9.5 mm 4 mm² AWG 12 — 2.85 mm — 9.5 mm 6 mm² AWG 10 — 3.5 mm — 9.5 mm 10 mm² AWG 8 — 4.3 mm — 12 mm
Han D® , Crimp contact, Contact surface: Silver plated 	0,14 ... 0,37 0,5 0,75 1 1,5 2,5	09 15 000 6104 09 15 000 6103 09 15 000 6105 09 15 000 6102 09 15 000 6101 09 15 000 6106	09 15 000 6204 09 15 000 6203 09 15 000 6205 09 15 000 6202 09 15 000 6201 09 15 000 6206	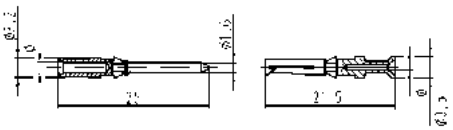 Wire gauge / Ø / Stripping length 0.14-0.37 mm² AWG 26-22 — 0.9 mm — 8 mm 0.5 mm² AWG 20 — 1.1 mm — 8 mm 0.75 mm² AWG 18 — 1.3 mm — 8 mm 1 mm² AWG 18 — 1.45 mm — 8 mm 1.5 mm² AWG 16 — 1.75 mm — 8 mm 2.5 mm² AWG 14 — 2.25 mm — 6 mm
Han D® , Crimp contact, Contact surface: Gold plated 	0,14 ... 0,37 0,5 0,75 1 1,5 2,5	09 15 000 6124 09 15 000 6123 09 15 000 6125 09 15 000 6122 09 15 000 6121 09 15 000 6126	09 15 000 6224 09 15 000 6223 09 15 000 6225 09 15 000 6222 09 15 000 6221 09 15 000 6226	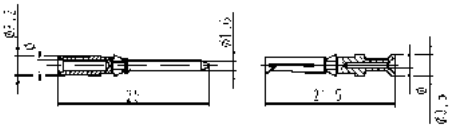 Wire gauge / Ø / Stripping length 0.14-0.37 mm² AWG 26-22 — 0.9 mm — 8 mm 0.5 mm² AWG 20 — 1.1 mm — 8 mm 0.75 mm² AWG 18 — 1.3 mm — 8 mm 1 mm² AWG 18 — 1.45 mm — 8 mm 1.5 mm² AWG 16 — 1.75 mm — 8 mm 2.5 mm² AWG 14 — 2.25 mm — 6 mm

Identification	Conductor cross-section (mm²)	Part number Male	Part number Female	Drawing (dimensions in mm)
Coding element 		09 12 000 9922	09 12 000 9922	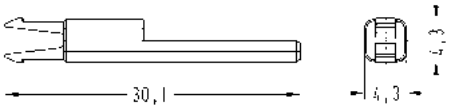

Han® K 6/12 Axial screw / Screw

Han-Com

Features

- Combination of signal and power in one connector
- Axial screw termination for power area
- Screw termination for signal area

Technical characteristics

Number of contacts	6
Additional contacts	+ 12 additional signal contacts
Electrical data acc. to IEC 61984	40 A 690 V 8 kV 3
Rated current	40 A
Rated voltage	690 V
Rated impulse voltage	8 kV
Pollution degree	3
Electrical data, signal	10 A 230/400 V 4 kV 3
Rated current (signal)	10 A
Rated voltage conductor-earth (signal)	230 V
Rated voltage conductor-conductor (signal)	400 V
Rated impulse voltage (signal)	4 kV
Pollution degree (signal)	3
Rated current acc. to UL	40 A
Rated current acc. to UL (signal)	10 A
Rated current acc. to CSA	40 A
Rated current acc. to CSA (signal)	10 A
Rated voltage acc. to UL	600 V
Rated voltage acc. to UL (signal)	600 V
Rated voltage acc. to CSA	300 V
Rated voltage acc. to CSA (signal)	300 V
Insulation resistance	$\geq 10^{10}$ Ω
Contact resistance	≤0.5 mΩ
Contact resistance, signal area	≤3 mΩ
Limiting temperature	-40 ... +125 °C
Mating cycles	≥500
Wire outer diameter	≤6,1 mm
Material (insert)	Polycarbonate
Colour (insert)	RAL 7032 (pebble grey)
Material (contacts)	Copper alloy
Material flammability class acc. to UL 94	V-0
RoHS	compliant with exemption
RoHS exemptions	**6c:** Copper alloy containing up to 4 % lead by weight

Derating

Current carrying capacity

The current carrying capacity of the connectors is limited by the thermal load capability of the contact element material including the connections and the insulating parts. The derating curve is therefore valid for currents which flow constantly (non-intermittent) through each contact element of the connector evenly, without exceeding the allowed maximum temperature.

Measuring and testing techniques acc. to IEC 60512-5-2

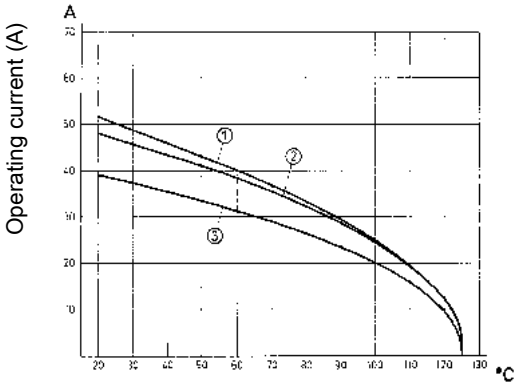

Ambient temperature (°C)

① Conductor cross-section 10 mm²
② Conductor cross-section 6 mm²
③ Conductor cross-section 4 mm²

Specifications and approvals

EN 60664-1
IEC 61984
UL 1977 ECBT2.E235076
CSA-C22.2 No. 182.3 ECBT8.E235076
DNV GL

Details

Hoods/Housings see chapter 31

Hex key (A/F 2) see chapter 90

Remarks on the axial screw technique

The wire gauges mentioned in the catalogue refer to geometric wire gauges of cables.

Han® K 6/12 Axial screw / Screw — Size 16 B

Number of contacts

6+ ⏚

40 A 690 V 8 kV 3
+ 12 additional signal contacts
10 A 230/400 V 4 kV 3

Identification	Conductor cross-section (mm²)	Part number Male	Part number Female	Drawing (dimensions in mm)
Han-Com® , Han® K 6/12, Axial screw termination / screw termination, Contact surface: Silver plated 	2,5 ... 8, 0,2 ... 2,5 Signal	09 38 018 2601	09 38 018 2701	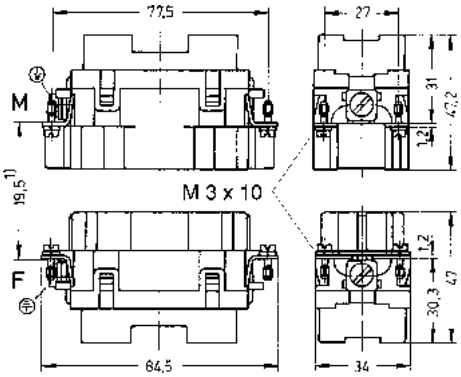 1) distance for contact max. 21 mm
Han-Com® , Han® K 6/12, Axial screw termination / screw termination, Contact surface: Silver plated 	6 ... 10, 0,2 ... 2,5 Signal	09 38 018 2602	09 38 018 2702	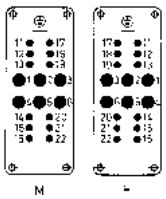 Contact arrangement (view from termination side) Power contacts Conductor cross-section / Tightening tourque / Stripping length 2.5 mm² / 1.5 Nm / 5 … 6 mm 4 mm² / 1.5 Nm / 5 … 6 mm 6 mm² / 2 Nm / 8 … 9 mm 10 mm² / 2 Nm / 8 … 9 mm Signal contacts : Stripping length 7.5 mm Tightening torque 0.5 Nm

Features

- Combination of signal and power in one connector
- Crimp termination for power and signal area
- Use of standard Han® C and Han D® contacts

Technical characteristics

Number of contacts	6
Additional contacts	+ 36 additional signal contacts
Electrical data acc. to IEC 61984	40 A 690 V 8 kV 3
Rated current	40 A
Rated voltage	690 V
Rated impulse voltage	8 kV
Pollution degree	3
Electrical data, signal	10 A 160 V 2,5 kV 3
Rated current (signal)	10 A
Rated voltage (signal)	160 V
Rated impulse voltage (signal)	2.5 kV
Pollution degree (signal)	3
Rated current acc. to UL	40 A
Rated current acc. to UL (signal)	10 A
Rated current acc. to CSA	40 A
Rated current acc. to CSA (signal)	10 A
Rated voltage acc. to UL	600 V
Rated voltage acc. to UL (signal)	600 V
Rated voltage acc. to CSA	300 V
Rated voltage acc. to CSA (signal)	300 V
Insulation resistance	≥10^{10} Ω
Contact resistance	≤1 mΩ, ≤3 mΩ
Limiting temperature	-40 ... +125 °C
Mating cycles	≥500
Wire outer diameter	≤5 mm
Material (insert)	Polycarbonate
Colour (insert)	RAL 7032 (pebble grey)
Material (contacts)	Copper alloy
Material flammability class acc. to UL 94	V-0
RoHS	compliant, compliant with exemption
RoHS exemptions	**6c:** Copper alloy containing up to 4 % lead by weight

Derating

Current carrying capacity

The current carrying capacity of the connectors is limited by the thermal load capability of the contact element material including the connections and the insulating parts. The derating curve is therefore valid for currents which flow constantly (non-intermittent) through each contact element of the connector evenly, without exceeding the allowed maximum temperature.

Measuring and testing techniques acc. to IEC 60512-5-2

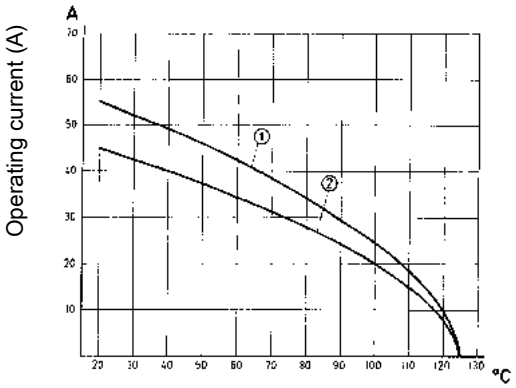

Ambient temperature (°C)

① Conductor cross-section 6 mm²
② Conductor cross-section 4 mm²

Specifications and approvals

EN 60664-1
IEC 61984
UL 1977 ECBT2.E235076
CSA-C22.2 No. 182.3 ECBT8.E235076
DNV GL

Details

Hoods/Housings see chapter 31

Contact resistance Han D® crimp contact: ≤ 3 mOhm

Contact resistance Han® C crimp contact: ≤ 1 mOhm

Crimping tools see chapter 90

Remarks on the crimp technique

The wire gauges mentioned in the catalogue refer to geometric wire gauges of cables.

Number of contacts

6+ ⏚

40 A 690 V 8 kV 3
+ 36 additional signal contacts
10 A 160 V 2,5 kV 3

Identification	Conductor cross-section (mm²)	Part number Male	Part number Female	Drawing (dimensions in mm)
Han-Com® , Han® K 6/36, Crimp termination  Please order crimp contacts separately.	1,5 ... 6, 0,14 ... 2,5 Signal	09 38 042 3001	09 38 042 3101	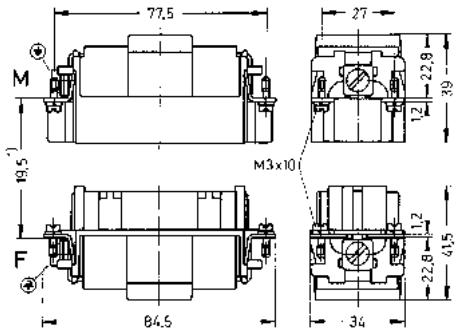 1) distance for contact max. 21 mm 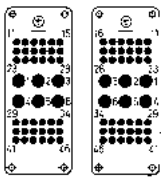 Contact arrangement (view from termination side)
Han® C , Crimp contact, Contact surface: Silver plated 	1,5 2,5 4 6	09 32 000 6104 09 32 000 6105 09 32 000 6107 09 32 000 6108	09 32 000 6204 09 32 000 6205 09 32 000 6207 09 32 000 6208	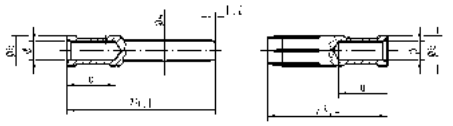
Han D® , Crimp contact, Contact surface: Silver plated 	0,14 ... 0,37 0,5 0,75 1 1,5 2,5	09 15 000 6104 09 15 000 6103 09 15 000 6105 09 15 000 6102 09 15 000 6101 09 15 000 6106	09 15 000 6204 09 15 000 6203 09 15 000 6205 09 15 000 6202 09 15 000 6201 09 15 000 6206	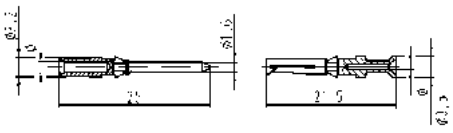

Conductor cross-section		Ø	Stripping length
1.5 mm²	AWG 16	1.75 mm	9.5 mm
2.5 mm²	AWG 14	2.25 mm	9.5 mm
4 mm²	AWG 12	2.85 mm	9.5 mm
6 mm²	AWG 10	3.5 mm	9.5 mm
10 mm²	AWG 8	4.3 mm	12 mm

Wire gauge		Ø	Stripping length
0.14-0.37 mm²	AWG 26-22	0.9 mm	8 mm
0.5 mm²	AWG 20	1.1 mm	8 mm
0.75 mm²	AWG 18	1.3 mm	8 mm
1 mm²	AWG 18	1.45 mm	8 mm
1.5 mm²	AWG 16	1.75 mm	8 mm
2.5 mm²	AWG 14	2.25 mm	6 mm

Han® K 6/36 Crimp

Size 16 B

Identification	Conductor cross-section (mm²)	Part number Male	Part number Female	Drawing (dimensions in mm)
Han D® , Crimp contact, Contact surface: Gold plated 	0,14 ... 0,37 0,5 0,75 1 1,5 2,5	09 15 000 6124 09 15 000 6123 09 15 000 6125 09 15 000 6122 09 15 000 6121 09 15 000 6126	09 15 000 6224 09 15 000 6223 09 15 000 6225 09 15 000 6222 09 15 000 6221 09 15 000 6226	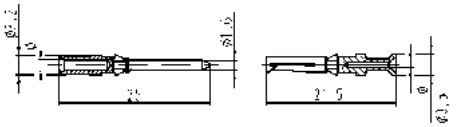
FO contact, for 1 mm plastic fibre 		20 10 001 3211	20 10 001 3221	 20 10 001 3211 + 20 10 001 3221

Wire gauge		⌀	Stripping length
0.14-0.37 mm²	AWG 26-22	0.9 mm	8 mm
0.5 mm²	AWG 20	1.1 mm	8 mm
0.75 mm²	AWG 18	1.3 mm	8 mm
1 mm²	AWG 18	1.45 mm	8 mm
1.5 mm²	AWG 16	1.75 mm	8 mm
2.5 mm²	AWG 14	2.25 mm	6 mm

Han® K 12/2 Crimp

Features

- Combination of signal and power in one connector
- Crimp termination for power and signal area
- Use of standard Han® C and Han D® contacts

Technical characteristics

Number of contacts	12
Additional contacts	+ 2 additional signal contacts
Electrical data acc. to IEC 61984	40 A 690 V 8 kV 3
Rated current	40 A
Rated voltage	690 V
Rated impulse voltage	8 kV
Pollution degree	3
Electrical data, signal	10 A 250 V 4 kV 3
Rated current (signal)	10 A
Rated voltage (signal)	250 V
Rated impulse voltage (signal)	4 kV
Pollution degree (signal)	3
Rated current acc. to UL	40 A
Rated current acc. to UL (signal)	10 A
Rated current acc. to CSA	40 A
Rated current acc. to CSA (signal)	10 A
Rated voltage acc. to UL	600 V
Rated voltage acc. to UL (signal)	600 V
Rated voltage acc. to CSA	300 V
Rated voltage acc. to CSA (signal)	300 V
Insulation resistance	≥10^{10} Ω
Contact resistance	≤1 mΩ, ≤3 mΩ
Limiting temperature	-40 ... +125 °C
Mating cycles	≥500
Wire outer diameter	≤5 mm
Material (insert)	Polycarbonate
Colour (insert)	RAL 7032 (pebble grey)
Material (contacts)	Copper alloy
Material flammability class acc. to UL 94	V-0
RoHS	compliant, compliant with exemption
RoHS exemptions	**6c:** Copper alloy containing up to 4 % lead by weight

Derating

Current carrying capacity

The current carrying capacity of the connectors is limited by the thermal load capability of the contact element material including the connections and the insulating parts. The derating curve is therefore valid for currents which flow constantly (non-intermittent) through each contact element of the connector evenly, without exceeding the allowed maximum temperature.

Measuring and testing techniques acc. to IEC 60512-5-2

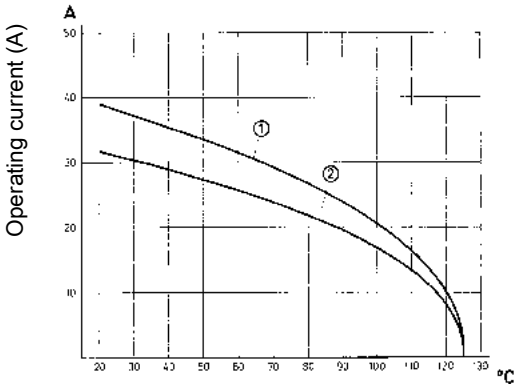

Ambient temperature (°C)

① Conductor cross-section 6 mm²
② Conductor cross-section 4 mm²

Specifications and approvals

EN 60664-1
IEC 61984
UL 1977 ECBT2.E235076
CSA-C22.2 No. 182.3 ECBT8.E235076
DNV GL

Details

Hoods/Housings see chapter 31

Contact resistance Han D® crimp contact: ≤ 3 mOhm

Contact resistance Han® C crimp contact: ≤ 1 mOhm

Crimping tools see chapter 90

Remarks on the crimp technique

The wire gauges mentioned in the catalogue refer to geometric wire gauges of cables.

Han® K 12/2 Crimp

Size 16 B

Number of contacts

12+ ⏚

40 A 690 V 8 kV 3
+ 2 additional signal contacts
10 A 250 V 4 kV 3

Identification	Conductor cross-section (mm²)	Part number Male	Part number Female	Drawing (dimensions in mm)
Han-Com® , Han® K 12/2, Crimp termination  Please order crimp contacts separately.	1,5 ... 6, 0,14 ... 2,5 Signal	09 32 012 3001	09 32 012 3101	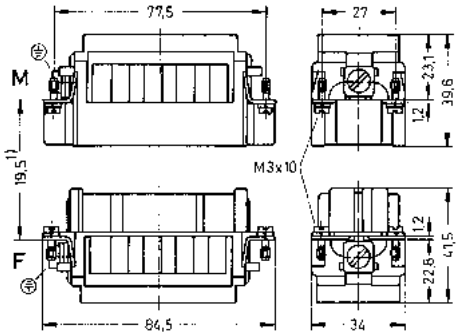 1) distance for contact max. 21 mm 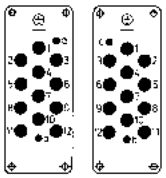 Contact arrangement (view from termination side)
Han® C , Crimp contact, Contact surface: Silver plated 	1,5 2,5 4 6	09 32 000 6104 09 32 000 6105 09 32 000 6107 09 32 000 6108	09 32 000 6204 09 32 000 6205 09 32 000 6207 09 32 000 6208	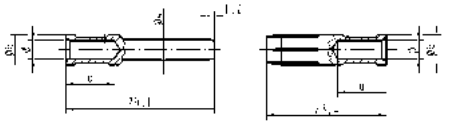 Conductor cross-section / Ø / Stripping length 1.5 mm² AWG 16 — 1.75 mm — 9.5 mm 2.5 mm² AWG 14 — 2.25 mm — 9.5 mm 4 mm² AWG 12 — 2.85 mm — 9.5 mm 6 mm² AWG 10 — 3.5 mm — 9.5 mm 10 mm² AWG 8 — 4.3 mm — 12 mm
Han D® , Crimp contact, Contact surface: Silver plated 	0,14 ... 0,37 0,5 0,75 1 1,5 2,5	09 15 000 6104 09 15 000 6103 09 15 000 6105 09 15 000 6102 09 15 000 6101 09 15 000 6106	09 15 000 6204 09 15 000 6203 09 15 000 6205 09 15 000 6202 09 15 000 6201 09 15 000 6206	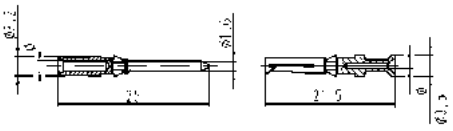 Wire gauge / Ø / Stripping length 0.14-0.37 mm² AWG 26-22 — 0.9 mm — 8 mm 0.5 mm² AWG 20 — 1.1 mm — 8 mm 0.75 mm² AWG 18 — 1.3 mm — 8 mm 1 mm² AWG 18 — 1.45 mm — 8 mm 1.5 mm² AWG 16 — 1.75 mm — 8 mm 2.5 mm² AWG 14 — 2.25 mm — 6 mm

Identification	Conductor cross-section (mm²)	Part number Male	Part number Female	Drawing (dimensions in mm)
Han D® , Crimp contact, Contact surface: Gold plated 	0,14 ... 0,37 0,5 0,75 1 1,5 2,5	09 15 000 6124 09 15 000 6123 09 15 000 6125 09 15 000 6122 09 15 000 6121 09 15 000 6126	09 15 000 6224 09 15 000 6223 09 15 000 6225 09 15 000 6222 09 15 000 6221 09 15 000 6226	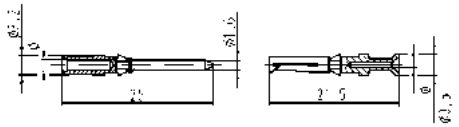 Wire gauge / ∅ / Stripping length 0.14-0.37 mm² AWG 26-22 / 0.9 mm / 8 mm 0.5 mm² AWG 20 / 1.1 mm / 8 mm 0.75 mm² AWG 18 / 1.3 mm / 8 mm 1 mm² AWG 18 / 1.45 mm / 8 mm 1.5 mm² AWG 16 / 1.75 mm / 8 mm 2.5 mm² AWG 14 / 2.25 mm / 6 mm
FO contact, for 1 mm plastic fibre 		20 10 001 3211	20 10 001 3221	 20 10 001 3211 + 20 10 001 3221

Features

- Combination of signal and power in one connector
- Screw termination for power and signal area

Technical characteristics

Number of contacts	4
Additional contacts	+ 8 additional signal contacts
Electrical data acc. to IEC 61984	80 A 400 V 6 kV 3
Rated current	80 A
Rated voltage	400 V
Rated impulse voltage	6 kV
Pollution degree	3
Electrical data, signal	16 A 400 V 6 kV 3
Rated current (signal)	16 A
Rated voltage (signal)	400 V
Rated impulse voltage (signal)	6 kV
Pollution degree (signal)	3
Rated current acc. to UL	80 A
Rated current acc. to UL (signal)	16 A
Rated current acc. to CSA	80 A
Rated current acc. to CSA (signal)	16 A
Rated voltage acc. to UL	600 V
Rated voltage acc. to UL (signal)	600 V
Rated voltage acc. to CSA	600 V
Rated voltage acc. to CSA (signal)	600 V
Insulation resistance	≥10^{10} Ω
Contact resistance	≤0.3 mΩ
Contact resistance, signal area	≤1 mΩ
Limiting temperature	-40 ... +125 °C
Mating cycles	≥500
Material (insert)	Polyamide
Colour (insert)	RAL 7032 (pebble grey)
Material (contacts)	Copper alloy
Material flammability class acc. to UL 94	HB
RoHS	compliant with exemption
RoHS exemptions	**6a:** Lead as an alloying element in steel for machining purposes and in galvanised steel containing up to 0,35 % lead by weight, **6c:** Copper alloy containing up to 4 % lead by weight

Derating

Current carrying capacity

The current carrying capacity of the connectors is limited by the thermal load capability of the contact element material including the connections and the insulating parts. The derating curve is therefore valid for currents which flow constantly (non-intermittent) through each contact element of the connector evenly, without exceeding the allowed maximum temperature.

Measuring and testing techniques acc. to IEC 60512-5-2

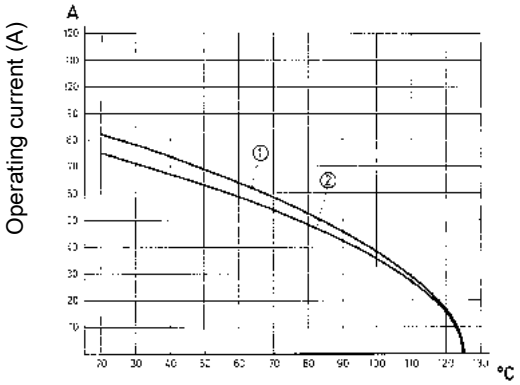

Ambient temperature (°C)

① Conductor cross-section 16 mm²
② Conductor cross-section 10 mm²

Specifications and approvals

EN 60664-1
IEC 61984
UL 1977 ECBT2.E235076
CSA-C22.2 No. 182.3 ECBT8.E235076
DNV GL

Details

Hoods/Housings see chapter 31

In accordance with the appropriate regulations a wire-end sleeve has to be used at clamps without wire protection (see “screw terminal”, chapter 00).

Han® K 4/8 Screw

Size 24 B

Number of contacts

4+ ⏚

80 A 400 V 6 kV 3
+ 8 additional signal contacts
16 A 400 V 6 kV 3

Identification	Conductor cross-section (mm²)	Part number Male	Part number Female	Drawing (dimensions in mm)
Han-Com® , Han® K 4/8, Screw termination, Contact surface: Silver plated 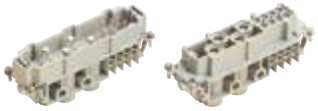	1,5 ... 16, 0,5 ... 2,5 Signal	09 38 012 2601	09 38 012 2701	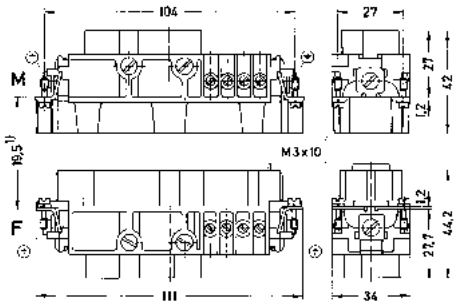 1) distance for contact max. 21 mm 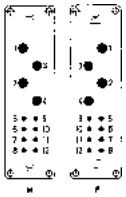 Contact arrangement (view from termination side)

power contacts		
wire gauge	tightening tourque	stripping length
1.5 mm²	1.2 Nm	14 mm
2.5 mm²	2 Nm	14 mm
4 mm²	3 Nm	14 mm
6 mm²	3 Nm	14 mm
10 mm²	3 Nm	14 mm
16 mm²	3 Nm	14 mm

Signal contacts :
Stripping length 7.5 mm
Tightening torque 0.5 Nm

Han® K 6/6 Crimp

Features

- Combination of signal and power in one connector
- Crimp termination for power and signal area
- Use of standard Han® C and Han E® contacts
- 16 coding options

Technical characteristics

Number of contacts	6
Additional contacts	+ 6 additional signal contacts
Electrical data acc. to IEC 61984	100 A 690 V 8 kV 3
Rated current	100 A
Rated voltage	690 V
Rated impulse voltage	8 kV
Pollution degree	3
Electrical data, signal	16 A 400 V 6 kV 3
Rated current (signal)	16 A
Rated voltage (signal)	400 V
Rated impulse voltage (signal)	6 kV
Pollution degree (signal)	3
Rated current acc. to UL	100 A
Rated current acc. to UL (signal)	16 A
Rated current acc. to CSA	100 A
Rated current acc. to CSA (signal)	15 A
Rated voltage acc. to UL	600 V
Rated voltage acc. to UL (signal)	300 V
Rated voltage acc. to CSA	600 V
Rated voltage acc. to CSA (signal)	600 V
Insulation resistance	≥10^{10} Ω
Contact resistance	≤1 mΩ, ≤0.3 mΩ
Limiting temperature	-40 ... +125 °C
Mating cycles	≥500
Wire outer diameter	≤12,8 mm
Material (insert)	Polycarbonate
Colour (insert)	RAL 7032 (pebble grey)
Material (contacts)	Copper alloy
Material (accessories)	Thermoplastic
Material flammability class acc. to UL 94	V-0
RoHS	compliant with exemption, compliant
RoHS exemptions	**6c:** Copper alloy containing up to 4 % lead by weight

Specifications and approvals

EN 60664-1
IEC 61984
UL 1977 ECBT2.E235076
CSA-C22.2 No. 182.3 ECBT8.E235076
DNV GL

Details

Contact resistance Han E® crimp contact: ≤ 1 mOhm

Contact resistance TC 100: ≤ 0.3 mOhm

For more technical details (i.e. number of crimping operations or crimping position) see eCatalogue

Crimping tools see chapter 90

Remarks on the crimp technique
The wire gauges mentioned in the catalogue refer to geometric wire gauges of cables.

Number of contacts

6+ ⏚

100 A 690 V 8 kV 3
+ 6 additional signal contacts
16 A 400 V 6 kV 3

Identification	Conductor cross-section (mm²)	Part number Male	Part number Female	Drawing (dimensions in mm)
Han-Com® , Han® K 6/6, Crimp termination  Please order crimp contacts separately. Please order coding pins separately.	10 ... 25, 0,14 ... 2,5 Signal	09 38 012 3002	09 38 012 3102	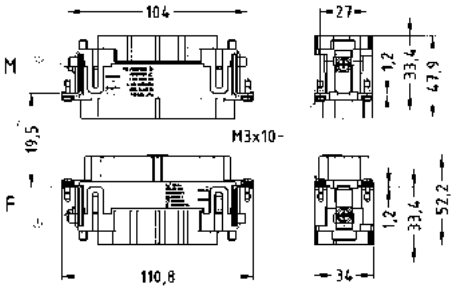 1) distance for contact max. 21 mm
Han E® , Crimp contact, Contact surface: Silver plated 	0,5 0,75 1 1,5 2,5 4	09 33 000 6121 09 33 000 6114 09 33 000 6105 09 33 000 6104 09 33 000 6102 09 33 000 6107	09 33 000 6220 09 33 000 6214 09 33 000 6205 09 33 000 6204 09 33 000 6202 09 33 000 6207	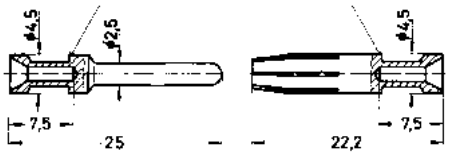

Conductor cross-section		Identification
0.14-0.37 mm²	AWG 26-22	no groove
0.5 mm²	AWG 20	no groove
0.75 mm²	AWG 18	1 groove*
1 mm²	AWG 18	1 groove
1.5 mm²	AWG 16	2 grooves
2.5 mm²	AWG 14	3 grooves
3 mm²	AWG 12	wide groove
4 mm²	AWG 12	no groove
* on the back crimp collar		

Stripping length 7.5 mm

Identification	Conductor cross-section (mm²)	Part number Male	Part number Female	Drawing (dimensions in mm)
Han E® , Crimp contact, Contact surface: Gold plated 	0,5 0,75 1 1,5 2,5 4	09 33 000 6122 09 33 000 6115 09 33 000 6118 09 33 000 6116 09 33 000 6123 09 33 000 6119	09 33 000 6222 09 33 000 6215 09 33 000 6218 09 33 000 6216 09 33 000 6223 09 33 000 6221	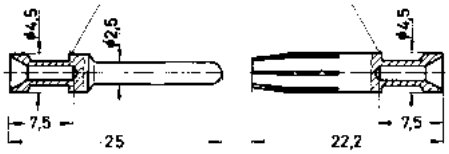

Conductor cross-section		Identification
0.14-0.37 mm²	AWG 26-22	no groove
0.5 mm²	AWG 20	no groove
0.75 mm²	AWG 18	1 groove*
1 mm²	AWG 18	1 groove
1.5 mm²	AWG 16	2 grooves
2.5 mm²	AWG 14	3 grooves
3 mm²	AWG 12	wide groove
4 mm²	AWG 12	no groove
* on the back crimp collar		

Stripping length 7.5 mm

Identification	Conductor cross-section (mm²)	Part number Male	Part number Female	Drawing (dimensions in mm)
Han E® , Crimp contact, Relay contact , Contact surface: Silver plated 	0,75 ... 1 1,5 2,5	09 33 000 6109 09 33 000 6110 09 33 000 6111		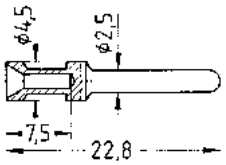
TC 100 , Crimp contact, Contact surface: Silver plated 	10 16 25	09 11 000 6114 09 11 000 6116 09 11 000 6125	09 11 000 6214 09 11 000 6216 09 11 000 6225	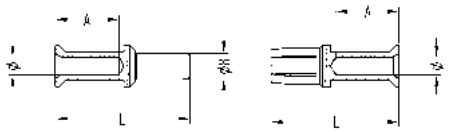
Coding element 		09 12 000 9922	09 12 000 9922	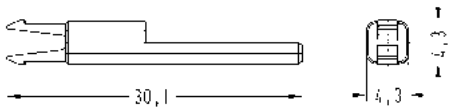

Wire gauge	∅	Stripping length A
10 mm²	4.3	19 mm
16 mm²	5.5	19 mm
25 mm²	7	19 mm
35 mm²	8.2	16 mm
for stranded wire according to IEC 60 228 Class 5		

Features

- Combination of signal and power in one connector
- Axial screw termination for power area
- Screw termination for signal area

Technical characteristics

Number of contacts	6
Additional contacts	+ 6 additional signal contacts
Electrical data acc. to IEC 61984	100 A 690 V 8 kV 3
Rated current	100 A
Rated voltage	690 V
Rated impulse voltage	8 kV
Pollution degree	3
Electrical data, signal	16 A 400 V 6 kV 3
Rated current (signal)	16 A
Rated voltage (signal)	400 V
Rated impulse voltage (signal)	6 kV
Pollution degree (signal)	3
Rated current acc. to UL	100 A
Rated current acc. to UL (signal)	16 A
Rated current acc. to CSA	100 A
Rated current acc. to CSA (signal)	15 A
Rated voltage acc. to UL	600 V
Rated voltage acc. to UL (signal)	300 V
Rated voltage acc. to CSA	600 V
Rated voltage acc. to CSA (signal)	600 V
Insulation resistance	≥10^{10} Ω
Contact resistance	≤0.5 mΩ
Contact resistance, signal area	≤3 mΩ
Limiting temperature	-40 ... +125 °C
Mating cycles	≥500
Wire outer diameter	≤11,4 mm
Material (insert)	Polycarbonate
Colour (insert)	RAL 7032 (pebble grey)
Material (contacts)	Copper alloy
Material flammability class acc. to UL 94	V-0
RoHS	compliant with exemption
RoHS exemptions	**6a:** Lead as an alloying element in steel for machining purposes and in galvanised steel containing up to 0,35 % lead by weight, **6c:** Copper alloy containing up to 4 % lead by weight

Derating

Current carrying capacity

The current carrying capacity of the connectors is limited by the thermal load capability of the contact element material including the connections and the insulating parts. The derating curve is therefore valid for currents which flow constantly (non-intermittent) through each contact element of the connector evenly, without exceeding the allowed maximum temperature.

Measuring and testing techniques acc. to IEC 60512-5-2

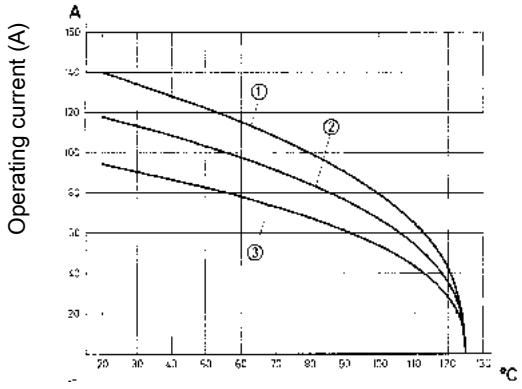

Ambient temperature (°C)

① Conductor cross-section 35 mm²
② Conductor cross-section 25 mm²
③ Conductor cross-section 16 mm²

Specifications and approvals

EN 60664-1
IEC 61984
UL 1977 ECBT2.E235076
CSA-C22.2 No. 182.3 ECBT8.E235076
DNV GL

Details

Hoods/Housings see chapter 31

Hex key (A/F 4) see chapter 90

Adapter 3/8“ 09 99 000 0370 see chapter 90

Remarks on the axial screw technique

The wire gauges mentioned in the catalogue refer to geometric wire gauges of cables.

Han® K 6/6 Axial screw / Screw

Size 24 B

Number of contacts

6+ ⏚

100 A 690 V 8 kV 3
+ 6 additional signal contacts
16 A 400 V 6 kV 3

Identification	Conductor cross-section (mm²)	Part number Male	Part number Female	Drawing (dimensions in mm)
Han-Com® , Han® K 6/6, Axial screw termination / screw termination, Contact surface: Silver plated 	16 ... 35, 0,2 ... 2,5 Signal	09 38 012 2651	09 38 012 2751	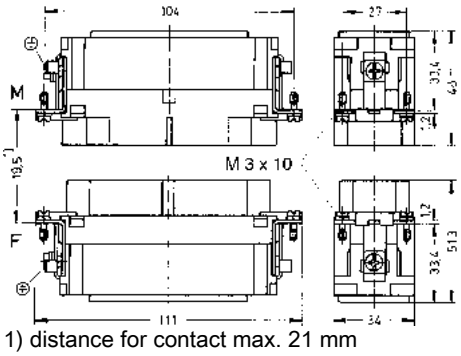 1) distance for contact max. 21 mm 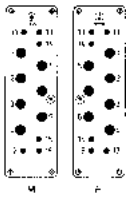 Contact arrangement (view from termination side) power contacts wire gauge / tightening tourque / stripping length 10 mm² / 6 Nm / 13 ... 14 mm 25 mm² / 7 Nm / 13 ... 14 mm 35 mm ² / 8 Nm / 13 ... 14 mm Signal contacts : Stripping length 7.5 mm Tightening torque 0.5 Nm

Han® K 8/0 Axial screw

Features

- Axial screw termination
- No signal contacts

Technical characteristics

Number of contacts	8
Electrical data acc. to IEC 61984	100 A 690 V 8 kV 3
Rated current	100 A
Rated voltage	690 V
Rated impulse voltage	8 kV
Pollution degree	3
Rated current acc. to UL	82 A
Rated current acc. to CSA	100 A
Rated voltage acc. to UL	600 V
Rated voltage acc. to CSA	600 V
Insulation resistance	≥10^{10} Ω
Contact resistance	≤0.5 mΩ
Limiting temperature	-40 ... +125 °C
Mating cycles	≥500
Wire outer diameter	≤11,4 mm
Material (insert)	Polycarbonate
Colour (insert)	RAL 7032 (pebble grey)
Material (contacts)	Copper alloy
Material flammability class acc. to UL 94	V-0
RoHS	compliant with exemption
RoHS exemptions	**6c:** Copper alloy containing up to 4 % lead by weight

Derating

Current carrying capacity

The current carrying capacity of the connectors is limited by the thermal load capability of the contact element material including the connections and the insulating parts. The derating curve is therefore valid for currents which flow constantly (non-intermittent) through each contact element of the connector evenly, without exceeding the allowed maximum temperature.

Measuring and testing techniques acc. to IEC 60512-5-2

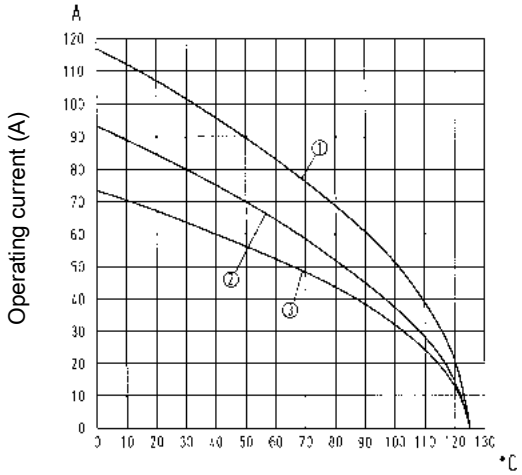

Ambient temperature (°C)

① Conductor cross-section 25 mm²
② Conductor cross-section 16 mm²
③ Conductor cross-section 10 mm²

Specifications and approvals

EN 60664-1
IEC 61984
UL 1977 ECBT2.E235076
CSA-C22.2 No. 182.3 ECBT8.E235076
DNV GL

Details

Hoods/Housings see chapter 31

Hex key (A/F 4) see chapter 90

Adapter 3/8“ 09 99 000 0370 see chapter 90

Remarks on the axial screw technique

The wire gauges mentioned in the catalogue refer to geometric wire gauges of cables.

Han® K 8/0 Axial screw

Size 24 B

Number of contacts

8+ ⏚

100 A 690 V 8 kV 3

Identification	Conductor cross-section (mm²)	Part number Male	Part number Female	Drawing (dimensions in mm)
Han-Com® , Han® K 8/0, Axial screw termination, Contact surface: Silver plated 	10 ... 25	09 38 008 2653	09 38 008 2753	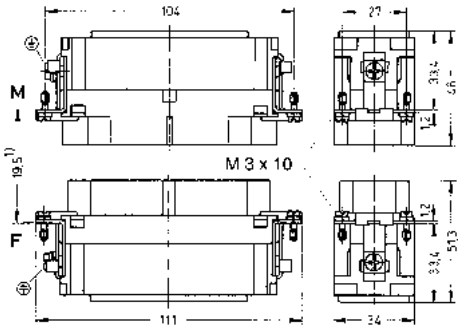 1) distance for contact max. 21 mm 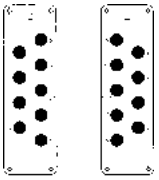 Contact arrangement (view from termination side)

power contacts		
wire gauge	tightening tourque	stripping length
10 mm²	6 Nm	13 ... 14 mm
16 mm²	7 Nm	13 ... 14 mm
25 mm²	7 Nm	13 ... 14 mm

Contents	Page
Summary	**06.5**
Han-Modular® hinged frames	**06.9**
Han® PE module	**06.14**
Han® 200 A module	**06.16**
Han® 200 A PE module	**06.20**
Han® 100 A module	**06.22**
Han® 100 A Single module	**06.25**
Han® 70 A module	**06.27**
Han® 70 A Hybrid module	**06.30**
Han® 40 A module	**06.33**
Han® C module	**06.36**
Han® CC Protected module	**06.39**
Han® CD module	**06.41**
Han E® module	**06.44**
Han E® Screw module	**06.47**
Han E® Protected module	**06.49**
Han® EE module	**06.51**
Han® EEE module	**06.54**
Han® ES module	**06.57**
Han® HV module	**06.59**
Han® HV Single module	**06.62**
Han DD® module	**06.64**
Han DD® Quad module	**06.67**

Contents	Page
Han® DDD module	**06.69**
Han® High Density module	**06.71**
Han® Full High Density module	**06.73**
Han® D-Sub module	**06.75**
Han® USB module	**06.78**
Han® FireWire module	**06.80**
Han® RJ45 module, female	**06.81**
Han® RJ45 module, male	**06.83**
RJ45 patch cable	**06.86**
Han® Gigabit module	**06.89**
Han® Shielded module	**06.94**
Han® Megabit module	**06.96**
Accessories for Gigabit, Shielded and Megabit	**06.100**
Han-Quintax® module	**06.102**
Han-Quintax® High Density module	**06.104**
Han® D Coax	**06.106**
Han® E Coax	**06.108**
Han® Multi module	**06.110**
Han® Pneumatic module	**06.117**
Han® SC module	**06.119**
Han® LC module	**06.122**
Han-Smart Ethernet Switches	**06.124**
Han-Smart ID CAN module	**06.126**

Contents	Page
Han-Smart Surge protection module	**06.128**
Han-Modular® Compact	**06.132**
Han-Modular® Twin	**06.136**
Han-Modular® ECO	**06.139**
Han-Modular® docking frames	**06.144**
Sliding frame	**06.147**
Accessories	**06.149**

Description of the Han-Modular® system



Modules
+
Hinged frame
+
Hoods/ Housings

→ **Han-Modular® Connectors**



The Han-Modular® series is designed for combining different transmission media in one connector. The multifaceted system of inserts, contacts, frames, hoods and housings as well as accessories fulfils individual customer requirements. The customer can choose between more than 100 different modules. These are suitable for different transmission media and cover various termination techniques.

The patented Han-Modular® hinged frame enables the configuration of all modules in the well-accepted Han® hoods and housings. Further additional solutions are available, e.g. suitable docking frames for drawer units. Individual customer requirements can be realised by means of the Han-Modular® series. Combining various transmission media in one single connector results in lower expenditures in installation time and production downtime. Space savings and cost savings are further benefits. The easy extension possibilities secure the ideal solution for an actual as well as future safe design.

Product features at a glance

- ❑ Combination of different connectors to one unit
- ❑ Shorter installation times
- ❑ Important space saving
- ❑ Save money for components as well as for the whole industrial site
- ❑ Future safe design due to easy extensions

Assembly details

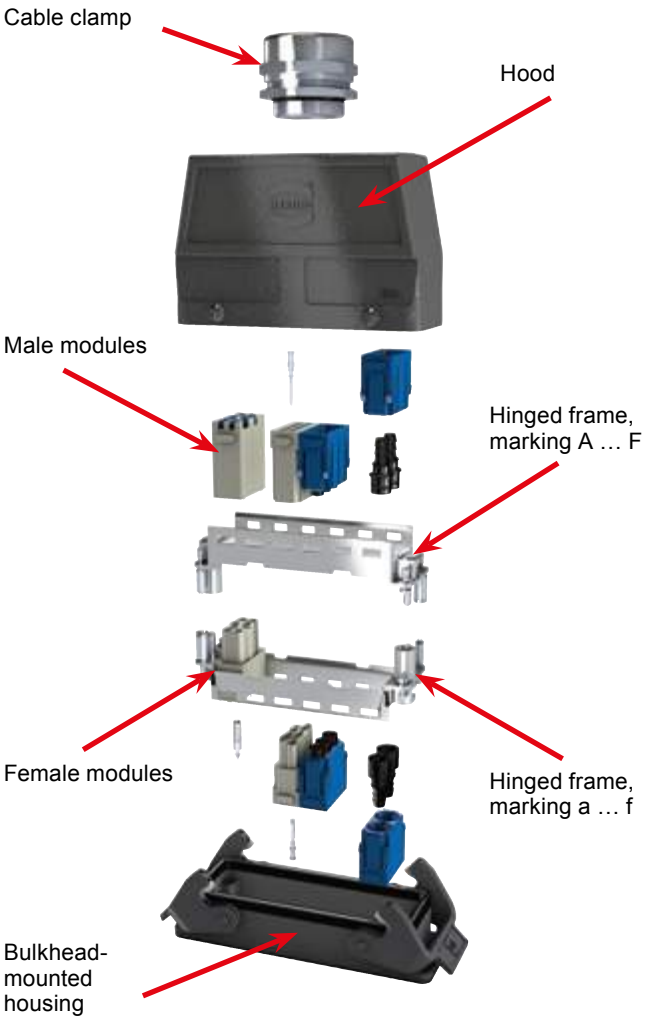

Summary

		Han® 200 A Axial Module	Han® 200 A PE Module	Han® 100 A Axial Module	Han® PE Module
100 - 200 A					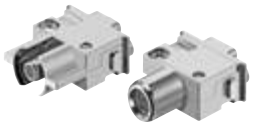
	Number of contacts Electrical data Termination type	1* 200 A / 1000 V Axial screw termination	1 x PE* 200 A Axial screw termination	1* 100 A / 1000 V Axial screw termination	1 x PE 100 A Axial screw termination
	Cross-section	40 … 70 mm²	40 … 70 mm²	16 … 35 mm²	16 … 35 mm²
	Male module (M)	09 14 001 2662	09 14 001 2667	09 14 002 2651	09 14 001 2633
	Female module (F)	09 14 001 2762	09 14 001 2767	09 14 002 2751	09 14 001 2733
	Cross-section	25 … 40 mm²	25 … 40 mm²	10 … 25 mm²	10 … 25 mm²
	Male module (M)	09 14 001 2663	09 14 001 2668	09 14 002 2653	09 14 001 2632
	Female module (F)	09 14 001 2763	09 14 002 2768	09 14 002 2753	09 14 001 2732

		Han® 70 A Axial module	Han® 70 A Hybrid module	Han® 40 A Axial module	Han® C Axial module
40 - 70 A					
	Number of contacts Electrical data Termination type	2 70 A / 1000 V Axial screw termination	1 + (4 x Han E®) 70 A / 1000 V Axial screw termination	2 40 A / 1000 V Axial screw termination	3 40 A / 690 V Axial screw termination
	Cross-section	14 … 22 mm²	14 … 22 mm²	6 … 10 mm²	6 … 10 mm²
	Male module (M)	09 14 002 2647	09 14 005 2647	09 14 002 2602	09 14 003 2602
	Female module (F)	09 14 002 2742	09 14 005 2742	09 14 002 2702	09 14 003 2702
	Cross-section	6 … 16 mm²	6 … 16 mm²	2.5 … 8 mm²	2.5 … 8 mm²
	Male module (M)	09 14 002 2646	09 14 005 2646	09 14 002 2601	09 14 003 2601
	Female module (F)	09 14 002 2741	09 14 005 2741	09 14 002 2701	09 14 003 2701

		Han E® Quick Lock module	Han® EE Quick Lock module	Han® ES module	Han E® screw module
16 A					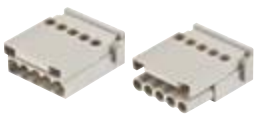
	Number of contacts Electrical data Termination type Cross-section	6 16 A / 500 V Quick Lock termination 0.5 … 2.5 mm²	8 16 A / 400 V Quick Lock termination 0.5 … 2.5 mm²	5 16 A / 400 V Cage clamp termination 0.14 … 2.5 mm²	5 16 A / 230/400 V Screw termination 0.5 … 2.5 mm²
	Male module (M)	09 14 006 2633	09 14 008 2633	09 14 005 2616	09 14 005 2601
	Female module (F)	09 14 006 2733	09 14 008 2733	09 14 005 2716	09 14 005 2701

		Han DD® Quick Lock module	Han DD® Quick Lock module		
≤ 10 A		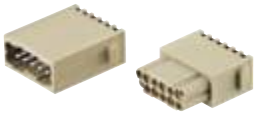	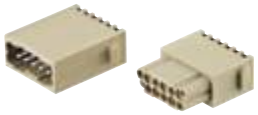		
	Number of contacts Electrical data Termination type Cross-section	12, silver plated 10 A / 250 V Quick Lock termination 0.25 … 1.5 mm²	12, gold plated 10 A / 250 V Quick Lock termination 0.25 … 1.5 mm²		
	Male module (M)	09 14 012 2632	09 14 012 2634		
	Female module (F)	09 14 012 2732	09 14 012 2734		

	Hexagonal drivers	with grip	Bit 1/4''	Adapter 3/8''	Hexagonal torque set
Axial screw termination					
	2 mm (40 A)	09 99 000 0313	09 99 000 0369		09 99 000 0834
	2.5 mm (70 A)		09 99 000 0375		09 99 000 0834
	4 mm (100 A)	09 99 000 0363		09 99 000 0370	09 99 000 0833
	5 mm (200 A)	09 99 000 0364		09 99 000 0371	09 99 000 0833

* Double module, requires two places in the frame

Summary

PE

	Han® PE module (Including crimp contact for earthing)			
Number of contacts Cross-section Termination type	1 x PE 35 mm² Crimp termination, Han® HC	1 x PE 25 mm² Crimp termination, Han® HC	1 x PE 16 mm² Crimp termination, Han® HC	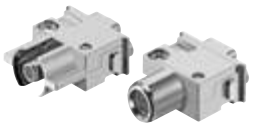
Male module (M)	09 14 001 3074	09 14 001 3073	09 14 001 3072	
Female module (F)	09 14 001 3174	09 14 001 3173	09 14 001 3172	

70 - 200 A

	Han® 200 A Crimp module	Han® 100 A Crimp module	Han® 100 A Single module	Han® 70 A Crimp module
				
Number of contacts Electrical data Cross-section Termination type	1* 200 A / 1000 V 25 … 70 mm² Crimp termination, Han® HC	2* 100 A / 1000 V 10 … 35 mm² Crimp termination, Han® HC	1 100 A / 830 V 10 … 35 mm² Crimp termination, Han® HC	2 70 A / 1000 V 6 … 25 mm² Crimp termination, Han® HC
Male module (M)	09 14 001 3001	09 14 002 3051	09 14 001 3031	09 14 002 3041
Female module (F)	09 14 001 3101	09 14 002 3151	09 14 001 3131	09 14 002 3141

40 A

	Han® 40 A Crimp module	Han® C module	Han® CC module	Han® CD module
				
Number of contacts Electrical data Cross-section Termination type	2 40 A / 1000 V 1.5 … 10 mm² Crimp termination, Han® C	3 40 A / 690 V 1.5 … 6 mm² Crimp termination, Han® C	4 40 A / 830 V 1.5 … 6 mm² Crimp termination, Han® C	3 + 4 40 A + 10 A / 830 V 0.14 … 6 mm² Crimp, Han® C + Han D®
Male module (M)	09 14 002 3002	09 14 003 3001	09 14 004 3041	09 14 007 3001
Female module (F)	09 14 002 3102	09 14 003 3101	09 14 004 3141	09 14 007 3101

16 A

	Han E® module	Han® EE module	Han® EEE module	Han E® Protected module
		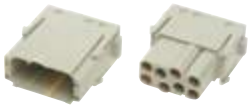		
Number of contacts Electrical data Cross-section Termination type	6 16 A / 500 V 0.14 … 4 mm² Crimp termination, Han E®	8 16 A / 400 V 0.14 … 4 mm² Crimp termination, Han E®	20* 16 A / 500 V 0.14 … 4 mm² Crimp termination, Han E®	6 16 A / 830 V 0.14 … 4 mm² Crimp termination, Han E®
Male module (M)	09 14 006 3001	09 14 008 3001	09 14 020 3001	09 14 006 3041
Female module (F)	09 14 006 3101	09 14 008 3101	09 14 020 3101	09 14 006 3141

≤ 10 A

	Han DD® module	Han® DDD module	Han DD® Quad module	Han® High Density module
		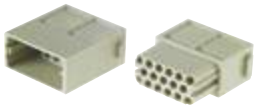		
Number of contacts Electrical data Cross-section Termination type	12 10 A / 250 V 0.14 … 2.5 mm² Crimp termination, Han D®	17 10 A / 150 V 0.14 … 2.5 mm² Crimp termination, Han D®	42* 10 A / 150 V 0.14 … 2.5 mm² Crimp termination, Han D®	25 4 A / 50 V 0.08 … 0.52 mm² Crimp termination, D-Sub
Male module (M)	09 14 012 3002	09 14 017 3001	09 14 042 3001	09 14 025 3001
Female module (F)	09 14 012 3102	09 14 017 3101	09 14 042 3101	09 14 025 3101

High Voltage

	Han® HV module 40 A	Han® HV module 16 A	Han® HV single module	
				
Number of contacts Electrical data Cross-section Termination type	2* 40 A / 2900/5000 V 1.5 … 10 mm² Crimp termination, Han® C	2* 16 A / 2900/5000 V 0.14 … 4 mm² Crimp termination, Han E®	2 16 A / 2500 V 0.14 … 4 mm² Crimp termination, Han E®	
Male module (M)	09 14 002 3023	09 14 002 3021	09 14 002 3025	
Female module (F)	09 14 002 3123	09 14 002 3121	09 14 002 3125	

* Double module, requires two places in the frame

Summary

Han® RJ45 module	Han® RJ45 module	for patch cable	for IDC	for patch cable	for IDC and preLink
Han® RJ45 module	- 8 contacts - cat. 6_A - 10 Gbit/s				
Han® RJ45 module	Part numbers	Male module (M) 09 14 001 4623	Male module (M) 09 14 001 4623	Female module (F) 09 14 001 4721	Female module (F) 09 14 001 4722
Han® RJ45 module	Part numbers	Adapter for patch cable: 09 14 000 9966	RJ Industrial IDC: 09 45 400 1560		RJ45 female IDC: 09 14 545 1561
Han® RJ45 module	Part numbers	Patch cable cat. 6: 09 47 474 71xx			RJ45 female preLink: 09 14 008 4720

Han-Quintax® Modules		Han-Quintax®	Han® High Density Quintax	Han D® Coax	Han E® Coax
Han-Quintax® Modules	Quintax modul				
Han-Quintax® Modules	Number of contacts	2 x 4*	2 x 8*	2 x Coax*	2 x Coax*
Han-Quintax® Modules	Male module (M)	09 14 002 3001	09 14 002 3001	09 14 002 3001	09 14 002 3001
Han-Quintax® Modules	Female module (F)	09 14 002 3101	09 14 002 3101	09 14 002 3101	09 14 002 3101
Han-Quintax® Modules	Insert (Cable Ø ≤ 9.5 mm)				
Han-Quintax® Modules	Data rate Electrical data Cross-section Termination type	100 Mbit/s (cat. 5e) 10 A / 50 V 0.14 … 2.5 mm² Crimp termination, Han D®	100 Mbit/s (cat. 5e) 5 A / 50 V 0.09 … 0.52 mm² Crimp termination, D-Sub	≤ 500 Mhz / 75 Ω 10 A / 50 V 0.14 … 2.5 mm² Crimp termination, Han D®	≤ 500 Mhz / 50 Ω 16 A / 50 V 0.14 … 4 mm² Crimp termination, Han E®
Han-Quintax® Modules	Male insert (M)	09 15 004 3013	09 15 008 3013	09 15 001 3013	09 15 001 3023
Han-Quintax® Modules	Female insert (F)	09 15 004 3113	09 15 008 3113	09 15 001 3113	09 15 001 3123
Han-Quintax® Modules	PE shielding termination	*Optional shielding termination to the hinged frame with the aid of Han-Quintax® metal adapter 09 14 000 9915*			

Han® GigaBit – Han® MegaBit Modules		Han® GigaBit module	Han® MegaBit module	Han® MegaBit module	Han® Shielded Module
Han® GigaBit – Han® MegaBit Modules	Adapter Module		with 2 cable entries 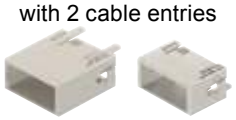	with 1 cable entry 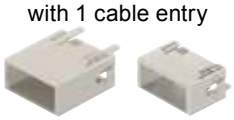	
Han® GigaBit – Han® MegaBit Modules	Male module (M)	09 14 001 3011	09 14 001 3011	09 14 001 3011	09 14 001 3011
Han® GigaBit – Han® MegaBit Modules	Female module (F)	09 14 001 3111	09 14 001 3111	09 14 001 3111	09 14 001 3111
Han® GigaBit – Han® MegaBit Modules	Insert (Cable Ø ≤ 14 mm)				
Han® GigaBit – Han® MegaBit Modules	Number of contacts Data rate Electrical data Cross-section Termination type Shielding termination	8 10 Gbit/s (cat. 6_A) 5 A / 50 V 0.09 … 0.52 mm² Crimp termination, D-Sub Crimp flange	2 x 4 2 x 100 Mbit/s (cat. 5e) 10 A / 50 V 0.14 … 2.5 mm² Crimp termination, Han D® 2 x crimp flange	8 1 Gbit/s (cat. 5e) 10 A / 50 V 0.14 … 2.5 mm² Crimp termination, Han D® Crimp flange	20 4 A / 32 V 0.09 … 0.52 mm² Crimp termination, D-Sub Crimp flange
Han® GigaBit – Han® MegaBit Modules	Male insert (M)	09 14 008 3011	09 14 008 3016	09 14 008 3021	09 14 020 3013
Han® GigaBit – Han® MegaBit Modules	Female insert (F)	09 14 008 3111	09 14 008 3116	09 14 008 3121	09 14 020 3113
Han® GigaBit – Han® MegaBit Modules		with PE shielding termination	with PE shielding termination	with PE shielding termination	
Han® GigaBit – Han® MegaBit Modules	Male insert (M)	09 14 008 3012	09 14 008 3017	09 14 008 3022	
Han® GigaBit – Han® MegaBit Modules	Female insert (F)	09 14 008 3112	09 14 008 3117	09 14 008 3122	

Serial Bus Modules		Han D-Sub module	Han® USB module	Han® FireWire module	Han® ID CAN module
Serial Bus Modules	Number of contacts Data rate Electrical data Cross-section Termination type	 9 + shielding 12 Mbit/s (Profibus) 5 A / 50 V 0.09 … 0.52 mm² Crimp termination, D-Sub	 8 5 Gbit/s (USB 3.0) 1 A / 50 V USB patch cable	 6 400 Mbit/s (IEEE 1394a) 1 A / 50 V FireWire patch cable	10 MB memory 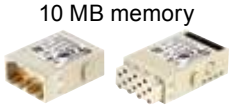 7 1 Mbit/s (CAN bus) 24 V 0.13 … 1.5 mm² Cage clamp termination
Serial Bus Modules	Male module (M)	09 14 009 3001	09 14 001 4601	09 14 001 4611	09 80 015 0100
Serial Bus Modules	Female module (F)	09 14 009 3101	09 14 001 4703	09 14 001 4711	09 80 115 0200

* Double module, requires two places in the frame

Summary

Coaxial Modules

	Han® Multi Module (for D-Sub coaxial contacts)		Han® Multi Module (for DIN 41626 coaxial contacts)	
				
Number of contacts	4	4	12*	12*
Male module (M)	09 14 004 4501	09 14 004 4501	09 14 012 4501	09 14 012 4501
Female module (F)	09 14 004 4513	09 14 004 4513	09 14 012 4512	09 14 012 4512
Coaxial contacts (≤ 2 GHz)				
Impedance Coaxial cable Termination type	75 Ω RG179, RG187 Crimp /crimp termination	50 Ω RG174, RG188, RG316 Crimp /crimp termination	75 Ω RG179, RG187 Solder /crimp termination	50 Ω RG174, RG188, RG316 Solder /crimp termination
Male contact	09 69 282 5230	09 69 282 5140	09 14 000 6221	09 14 000 6211
Female contact	09 69 182 5230	09 69 182 5140	09 14 000 6121	09 14 000 6111

Optical Modules

	Han® LC module	Han® SC module	Han® Multi module	Han® Multi module
				
Number of contacts	6	4	4	12*
Male module (M)	09 14 006 4701	09 14 004 4701	09 14 004 4501	09 14 012 4501
Female module (F)	09 14 006 4711	09 14 004 4711	09 14 004 4512	09 14 012 4512
Contacts				
1 mm POF		20 10 001 5211	Male: 20 10 001 4211 Female: 20 10 001 4221	Male: 20 10 001 4211 Female: 20 10 001 4221
1 mm POF Fast assembly termination		20 10 001 5217		
SI-Fibre 200 / 230 µm Multi-Mode		20 10 230 5211	Male: 20 10 230 4211 Female: 20 10 230 4221	Male: 20 10 230 4211 Female: 20 10 230 4221
GI-Fibre 50-62,5 / 125 µm Multi-Mode	20 10 125 8211	20 10 125 5211	Male: 20 10 125 4212 Female: 20 10 125 4222	Male: 20 10 125 4212 Female: 20 10 125 4222
GI-Fibre 9 / 125 µm Single-Mode	20 10 125 8220	20 10 125 5220		

Further Modules

	Han-Eco® Monoblock	Han-Eco® PE module	Han® Dummy module	Han® Pneumatic module metal
Field of application	for Han-Eco® hoods/housings only	for Han-Eco® hoods/housings only	to fill-up empty module places	
	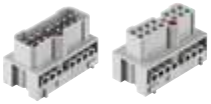			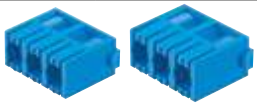
Number of contacts Electrical data Cross-section Termination type	10, 14, 20, 28 + PE 16 A / 500 V 0.5 … 2.5 mm² Screw termination	1 x PE 1.5 … 16 mm² Screw termination		3 3, 4, 6 mm
Male module (M)	19 41 0xx 2601	19 41 001 2600	09 14 000 9950	09 14 003 3501
Female module (F)	19 41 0xx 2701	19 41 001 2700		09 14 003 3501

Contacts for pneumatic modules

	Pneumatic contacts (max. 10 bar)			Adapter
For tube outer diameter				
Tube-Ø	6 mm OD	4 mm OD	3 mm OD	for Han® C contacts
Male contact	09 14 000 6356	09 14 000 6354	09 14 000 6353	Male: 09 14 000 6391
Female without shut-off	09 14 000 6456	09 14 000 6454	09 14 000 6453	Female: 09 14 000 6491
Female with shut-off	09 14 000 6466	09 14 000 6464	09 14 000 6463	
For tube inner diameter				
Tube-Ø	6 mm ID	4 mm ID	3 mm ID	
Male contact	09 14 000 6306	09 14 000 6304	09 14 000 6303	
Female without shut-off	09 14 000 6406	09 14 000 6404	09 14 000 6403	
Female with shut-off	09 14 000 6416	09 14 000 6414	09 14 000 6413	

* Double module, requires two places in the frame

Features

- Suitable for more than 100 different modules
- Quick and easy assembly supported by an audible “Click”
- Very robust mechanical characteristics
- Modules can be assembled/removed without tools
- Two leading PE contacts
- Easy handling

Technical characteristics

Limiting temperature	-40 ... +125 °C
Mating cycles	≥500
Mating cycles with other HMC components	≥10000
Material (frames)	Zinc die-cast, Stainless steel
RoHS	compliant with exemption
RoHS exemptions	**6c:** Copper alloy containing up to 4 % lead by weight

Specifications and approvals

EN 60664-1
IEC 61984
UL 1977 ECBT2.E235076
DNV GL

Details

Both different markings must be used for one connector!

Conductor cross-section PE (power side) 4 ... 10 mm²

Conductor cross-section 10 mm² only with ferrule crimping tool 09 99 000 0374

Conductor cross-section PE (signal side) 1 ... 2.5 mm²

Locking element 09 14 000 9960 see accessories in chapter 06

Han-Modular® hinged frames

Size 6 B



Identification	Part number	Drawing (dimensions in mm)
Han-Modular® , Hinged frame, for 2 modules, A ... B, Mating cycles ≥500 	09 14 006 0361	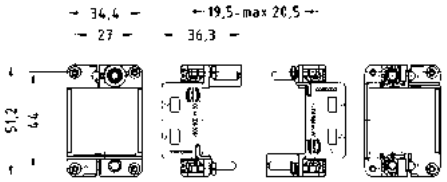
Han-Modular® , Hinged frame, for 2 modules, a ... b, Mating cycles ≥500 	09 14 006 0371	
Han-Modular® , Hinged frame, HMC version, for 2 modules, A ... B, Mating cycles ≥10000 	09 14 206 0303	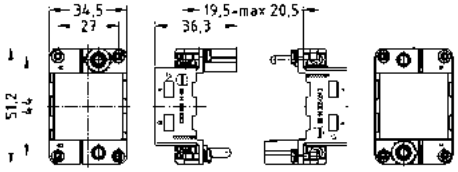
Han-Modular® , Hinged frame, HMC version, for 2 modules, a ... b, Mating cycles ≥10000 	09 14 206 0313	



Identification	Part number	Drawing (dimensions in mm)
Han-Modular® , Hinged frame, for 3 modules, A ... C, Mating cycles ≥500 	09 14 010 0361	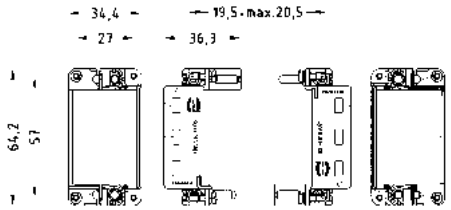
Han-Modular® , Hinged frame, for 3 modules, a ... c, Mating cycles ≥500 	09 14 010 0371	
Han-Modular® , Hinged frame, HMC version, for 3 modules, A ... C, Mating cycles ≥10000 	09 14 210 0303	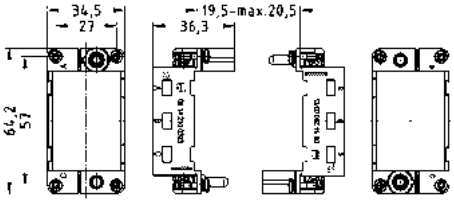
Han-Modular® , Hinged frame, HMC version, for 3 modules, a ... c, Mating cycles ≥10000 	09 14 210 0313	

Han-Modular® hinged frames

Size 16 B



Identification	Part number	Drawing (dimensions in mm)
Han-Modular® , Hinged frame, for 4 modules, A ... D, Mating cycles ≥500 	09 14 016 0361	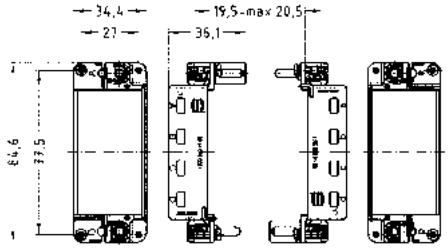
Han-Modular® , Hinged frame, for 4 modules, a ... d, Mating cycles ≥500 	09 14 016 0371	
Han-Modular® , Hinged frame, HMC version, for 4 modules, A ... D, Mating cycles ≥10000 	09 14 216 0303	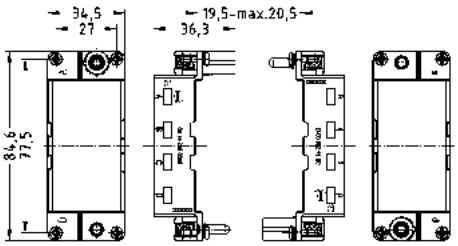
Han-Modular® , Hinged frame, HMC version, for 4 modules, a ... d, Mating cycles ≥10000 	09 14 216 0313	



Identification	Part number	Drawing (dimensions in mm)
Han-Modular® , Hinged frame, for 6 modules, A ... F, Mating cycles ≥500 	09 14 024 0361	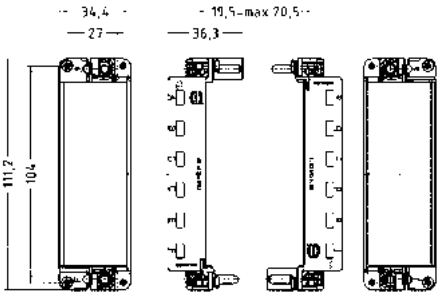
Han-Modular® , Hinged frame, for 6 modules, a ... f, Mating cycles ≥500 	09 14 024 0371	
Han-Modular® , Hinged frame, HMC version, for 6 modules, A ... F, Mating cycles ≥10000 	09 14 224 0303	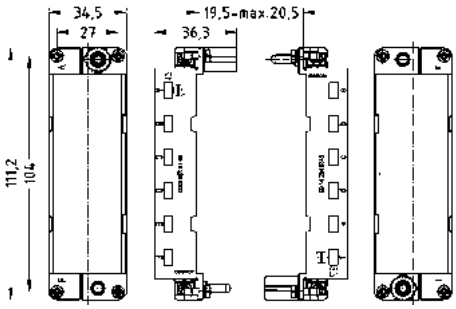
Han-Modular® , Hinged frame, HMC version, for 6 modules, a ... f, Mating cycles ≥10000 	09 14 224 0313	

Han® PE module

Number of contacts

1

Features

- PE module to connect large cable diameters within the Han-Modular® hinged frames
- Electrically conductive connection of the PE contact to the hinged frames and the hoods and housings acc. to EN 61984
- Pre-leading and robust 100 A PE contact
- Suitable for the connection of standard power cables even with large cross-sections (no special cables with reduced PE necessary)
- Crimp- and axial module are compatible modules

Technical characteristics

Number of contacts	1
Contact resistance	≤0.3 mΩ
Limiting temperature	-40 ... +125 °C
Mating cycles	≥500
Material (insert)	Zinc die-cast, nickel-plated
Material (contacts)	Copper alloy
RoHS	compliant with exemption
RoHS exemptions	**6c:** Copper alloy containing up to 4 % lead by weight

Specifications and approvals

IEC 61984
UL 1977 ECBT2.E235076
CSA-C22.2 No. 182.3 ECBT8.E235076

Details

Short-time withstand current: 1920 A for 1 second (acc. to IEC 60947-7-2)

Identification	Conductor cross-section (mm²)	Part number Male	Part number Female	Drawing (dimensions in mm)
Han-Modular® , Han® PE module, Crimp termination, Pack contents: 2 PE module halves, 1 contact pressure plate, 1 crimp contact Contact surface: Silver plated	16 25 35	09 14 001 3072 09 14 001 3073 09 14 001 3074	09 14 001 3172 09 14 001 3173 09 14 001 3174	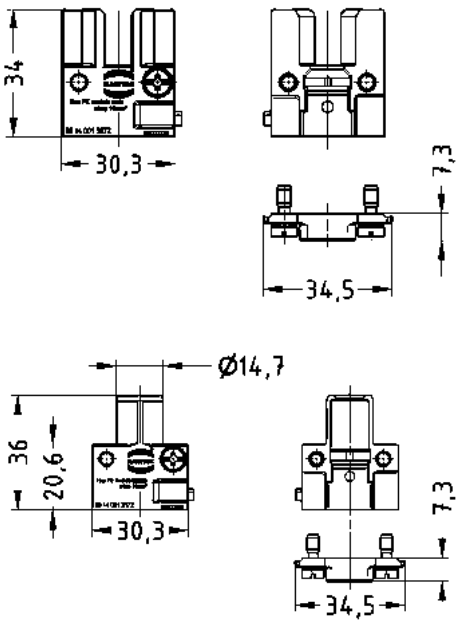

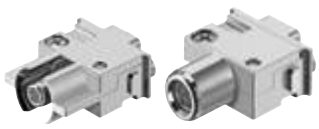

Stripping length

mm²	10	16	25	35
mm	19	19	19	16

Han® PE module

Number of contacts

1

Features

- PE module to connect large cable diameters within the Han-Modular® hinged frames
- Electrically conductive connection of the PE contact to the hinged frames and the hoods and housings acc. to EN 61984
- Pre-leading and robust 100 A PE contact
- Suitable for the connection of standard power cables even with large cross-sections (no special cables with reduced PE necessary)
- Crimp- and axial module are compatible modules

Technical characteristics

Number of contacts	1
Contact resistance	≤0.3 mΩ
Limiting temperature	-40 ... +125 °C
Mating cycles	≥500
Material (insert)	Zinc die-cast, nickel-plated
Material (contacts)	Copper alloy
RoHS	compliant with exemption
RoHS exemptions	**6c:** Copper alloy containing up to 4 % lead by weight, **6a:** Lead as an alloying element in steel for machining purposes and in galvanised steel containing up to 0,35 % lead by weight

Specifications and approvals

IEC 61984
UL 1977 ECBT2.E235076
CSA-C22.2 No. 182.3 ECBT8.E235076

Details

Remarks on the axial screw technique

The wire gauges mentioned in the catalogue refer to geometric wire gauges of cables.

Short-time withstand current: 1920 A for 1 second (acc. to IEC 60947-7-2)

Identification	Conductor cross-section (mm²)	Part number Male	Part number Female	Drawing (dimensions in mm)
Han-Modular® , Han® PE module, Axial screw termination, Pack contents: PE module with pre-assembled axial screw contact Contact surface: Silver plated	10 ... 25 16 ... 35 22 ... 38	09 14 001 2632 09 14 001 2633 09 14 001 2634	09 14 001 2732 09 14 001 2733 09 14 001 2734	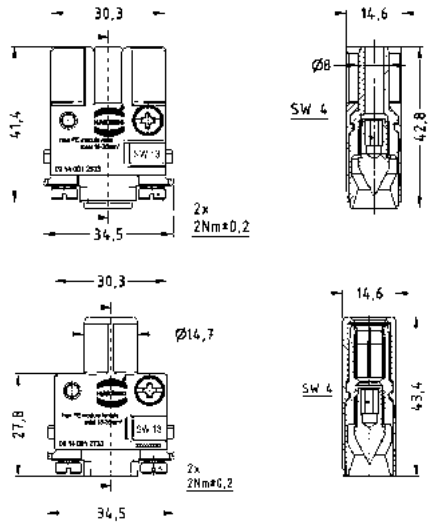

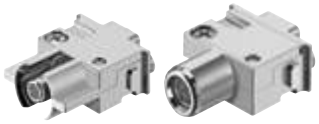

Stripping length 13 mm

Tightening torque

mm²	10	16	25	35
Nm	6	6	7	8

Features

- Contacts can be unlocked from the mating side
- Power module for big cross-sections up to 70 mm²
- Suitable as a 3 + PE connector in a Han® 32 B housing

Technical characteristics

Number of contacts	1
Electrical data acc. to IEC 61984	200 A 1.000 V 8 kV 3
Rated current	200 A
Rated voltage	1000 V
Rated impulse voltage	8 kV
Pollution degree	3
Rated voltage acc. to UL	600 V
Insulation resistance	≥10^{10} Ω
Contact resistance	≤0.3 mΩ, ≤0.2 mΩ
Limiting temperature	-40 ... +125 °C
Mating cycles	≥500
Material (insert)	Polycarbonate
Colour (insert)	RAL 7032 (pebble grey)
Material (contacts)	Copper alloy
Material flammability class acc. to UL 94	V-0
RoHS	compliant, compliant with exemption
RoHS exemptions	**6c:** Copper alloy containing up to 4 % lead by weight, **6a:** Lead as an alloying element in steel for machining purposes and in galvanised steel containing up to 0,35 % lead by weight

Derating

Current carrying capacity

The current carrying capacity of the connectors is limited by the thermal load capability of the contact element material including the connections and the insulating parts. The derating curve is therefore valid for currents which flow constantly (non-intermittent) through each contact element of the connector evenly, without exceeding the allowed maximum temperature.

Measuring and testing techniques acc. to IEC 60512-5-2

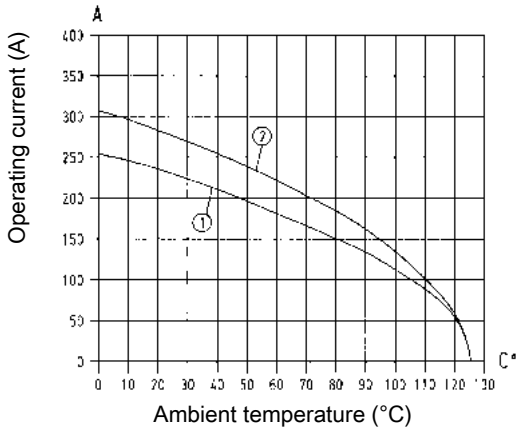

① 24 B hoods/housings with 3 modules Conductor cross-section 50 mm²
② 24 B hoods/housings with 3 modules Conductor cross-section 70 mm²

Specifications and approvals

EN 60664-1
IEC 61984
UL 1977 ECBT2.E235076
UL 2237 PVVA2.E318390
CSA-C22.2 No. 182.3 PVVA8.E318390
DNV GL

Details

Contact resistance crimp contact: ≤ 0.3 mOhm

For more technical details (i.e. number of crimping operations or crimping position) see eCatalogue

Remarks on the axial screw technique

The wire gauges mentioned in the catalogue refer to geometric wire gauges of cables.

Contact resistance axial screw contact: ≤ 0.2 mOhm

Crimping tools see chapter 90

Remarks on the crimp technique

The wire gauges mentioned in the catalogue refer to geometric wire gauges of cables.

Han® 200 A module

Number of contacts

1

200 A 1.000 V 8 kV 3

Identification	Conductor cross-section (mm²)	Part number Male	Part number Female	Drawing (dimensions in mm)
Han-Modular® , Han® 200 A module, Crimp termination  Please order crimp contacts separately.	25 ... 70	09 14 001 3001	09 14 001 3101	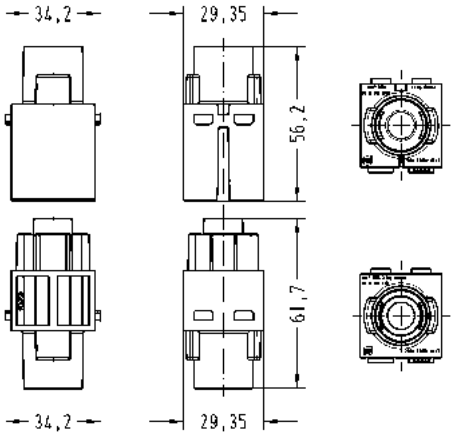 Removal tool 09 99 000 0820 See chapter 90
TC 200 , Crimp contact, Contact surface: Silver plated 	25 35 50 70	09 11 000 6120 09 11 000 6121 09 11 000 6122 09 11 000 6123	09 11 000 6220 09 11 000 6221 09 11 000 6222 09 11 000 6223	
TC 200 , Screw contact, Contact surface: Silver plated	70	09 11 000 6124	09 11 000 6224	

電線サイズ	∅	ストリップ長さ A
25 mm²	7	19 mm
35 mm²	8.2	20 mm
50 mm²	10	22.5 mm
70 mm²	11.5	22.5 mm
より線用 (IEC 60 228 Class 5準拠)		

Han® 200 A module

Number of contacts

1

200 A 1.000 V 8 kV 3

Identification	Conductor cross-section (mm²)	Part number Male	Part number Female	Drawing (dimensions in mm)
Han-Modular® , Han® 200 A module, With protective insert, Crimp termination  Please order crimp contacts separately.	25 ... 70	09 14 001 3002	09 14 001 3102	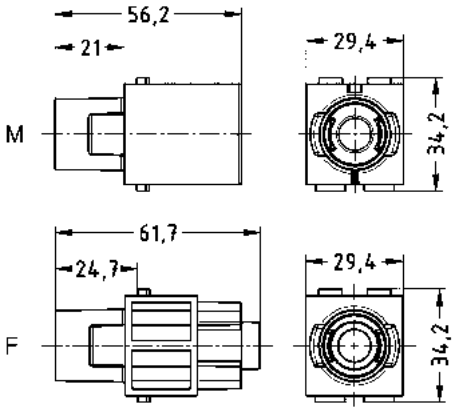
TC 200 , Crimp contact, Contact surface: Silver plated 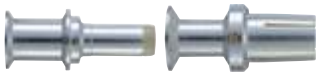	25 35 50 70	09 11 000 7120 09 11 000 7121 09 11 000 7122 09 11 000 7123	09 11 000 6220 09 11 000 6221 09 11 000 6222 09 11 000 6223	

電線サイズ	∅	ストリップ長さ A
25 mm²	7	19 mm
35 mm²	8.2	20 mm
50 mm²	10	22.5 mm
70 mm²	11.5	22.5 mm
より線用 (IEC 60 228 Class 5準拠)		

Han® 200 A module

Number of contacts

1

200 A 1.000 V 8 kV 3

Identification	Conductor cross-section (mm²)	Part number Male	Part number Female	Drawing (dimensions in mm)
Han-Modular® , Han® 200 A module, Axial screw termination, Contact surface: Silver plated 	25 ... 40 40 ... 70	09 14 001 2663 09 14 001 2662	09 14 001 2763 09 14 001 2762	M 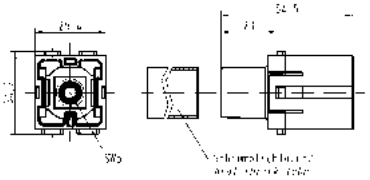 F 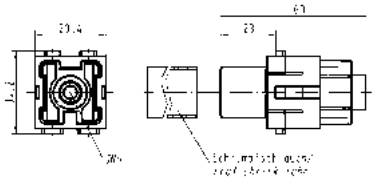 Stripping length 16 mm Tightening torque 8 Nm @ 25 ... 40 mm², 9 Nm @ 40 mm², 10 Nm @ 70 mm²

Technical characteristics

Number of contacts	1
Contact resistance	≤0.2 mΩ
Limiting temperature	-40 ... +125 °C
Mating cycles	≥500
Material (insert)	Polycarbonate
Colour (insert)	RAL 7032 (pebble grey)
Material (contacts)	Copper alloy
Material flammability class acc. to UL 94	V-0
RoHS	compliant with exemption
RoHS exemptions	**6a:** Lead as an alloying element in steel for machining purposes and in galvanised steel containing up to 0,35 % lead by weight, **6c:** Copper alloy containing up to 4 % lead by weight

Derating

Current carrying capacity

The current carrying capacity of the connectors is limited by the thermal load capability of the contact element material including the connections and the insulating parts. The derating curve is therefore valid for currents which flow constantly (non-intermittent) through each contact element of the connector evenly, without exceeding the allowed maximum temperature.

Measuring and testing techniques acc. to IEC 60512-5-2

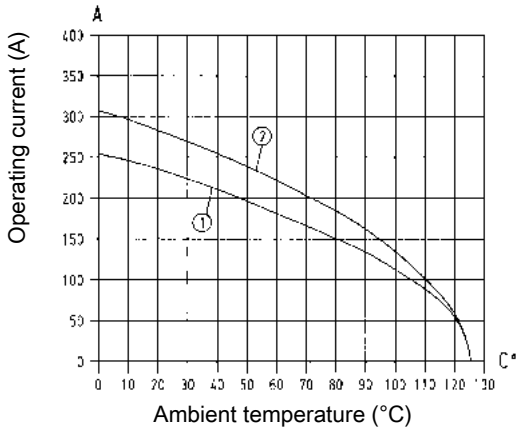

① 24 B hoods/housings with 3 modules Conductor cross-section 50 mm²
② 24 B hoods/housings with 3 modules Conductor cross-section 70 mm²

Specifications and approvals

EN 60664-1
IEC 61984
UL 1977 ECBT2.E235076
DNV GL
UL 2237 PVVA2.E318390
CSA-C22.2 No. 182.3 PVVA8.E318390

Han® 200 A PE module

Number of contacts

1

Identification	Conductor cross-section (mm²)	Part number Male	Part number Female	Drawing (dimensions in mm)
Han-Modular® , Han® 200 A PE module, Axial screw termination, Contact surface: Silver plated 	25 ... 40 40 ... 70	09 14 001 2668 09 14 001 2667	09 14 001 2768 09 14 001 2767	M 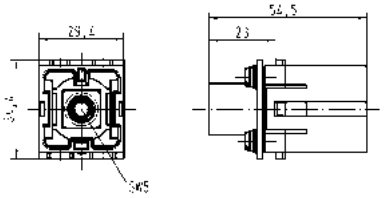 F 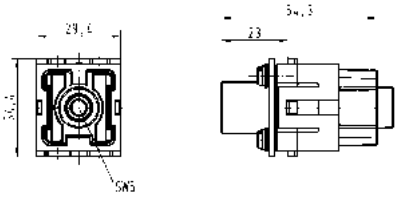 Hex key with grip 09 99 000 0364 Adapter 3/8” 09 99 000 0371 See chapter 90 Stripping length 16 mm Tightening torque 8 Nm @ 25 ... 40 mm², 9 Nm @ 40 mm², 10 Nm @ 70 mm²

Features

- Crimp- and axial module are compatible modules
- Contacts can be unlocked from the mating side

Technical characteristics

Number of contacts	2
Electrical data acc. to IEC 61984	100 A 1.000 V 8 kV 3
Rated current	100 A
Rated voltage	1000 V
Rated impulse voltage	8 kV
Pollution degree	3
Rated voltage acc. to UL	600 V
Insulation resistance	≥10^{10} Ω
Contact resistance	≤0.3 mΩ
Limiting temperature	-40 ... +125 °C
Mating cycles	≥500
Material (insert)	Polycarbonate
Colour (insert)	RAL 7032 (pebble grey)
Material (contacts)	Copper alloy
Material flammability class acc. to UL 94	V-0
RoHS	compliant, compliant with exemption
RoHS exemptions	**6a:** Lead as an alloying element in steel for machining purposes and in galvanised steel containing up to 0,35 % lead by weight, **6c:** Copper alloy containing up to 4 % lead by weight

Derating

Current carrying capacity

The current carrying capacity of the connectors is limited by the thermal load capability of the contact element material including the connections and the insulating parts. The derating curve is therefore valid for currents which flow constantly (non-intermittent) through each contact element of the connector evenly, without exceeding the allowed maximum temperature.

Measuring and testing techniques acc. to IEC 60512-5-2

Crimp termination

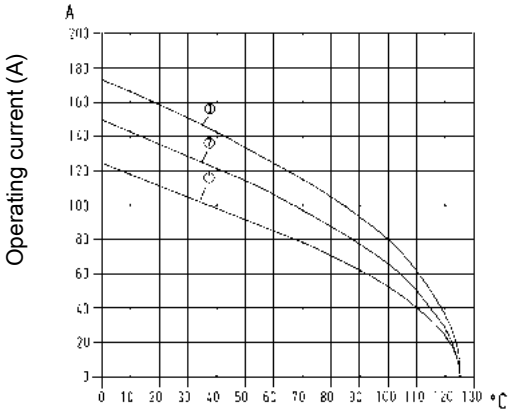

Ambient temperature (°C)

① 24 B hoods/housings with 3 modules Conductor cross-section 16 mm²
② 24 B hoods/housings with 3 modules Conductor cross-section 25 mm²
③ 24 B hoods/housings with 3 modules Conductor cross-section 35 mm²

Axial screw termination

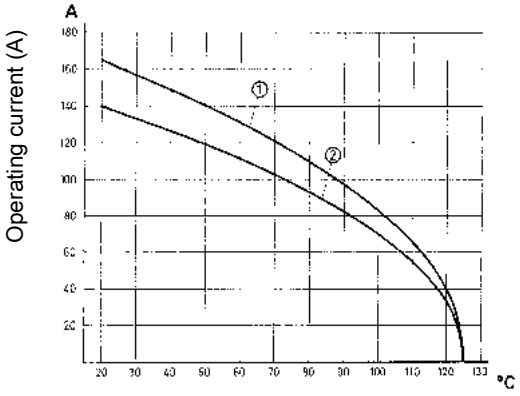

Ambient temperature (°C)

① 24 B hoods/housings with 3 modules Conductor cross-section 35 mm²
② 24 B hoods/housings with 3 modules Conductor cross-section 25 mm²

Specifications and approvals

EN 60664-1
IEC 61984
UL 1977 ECBT2.E235076
CSA-C22.2 No. 182.3 ECBT8.E235076
UL 2237 PVVA2.E318390
CSA-C22.2 No. 182.3 PVVA8.E318390
DNV GL

Details

For more technical details (i.e. number of crimping operations or crimping position) see eCatalogue

Crimping tools see chapter 90

Details

Remarks on the crimp technique

The wire gauges mentioned in the catalogue refer to geometric wire gauges of cables.

Han® 100 A module

Number of contacts

2

100 A 1.000 V 8 kV 3

Identification	Conductor cross-section (mm²)	Part number Male	Part number Female	Drawing (dimensions in mm)
Han-Modular® , Han® 100 A module, Crimp termination  Please order crimp contacts separately.	10 ... 35	09 14 002 3051	09 14 002 3151	M 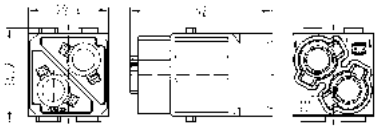 F 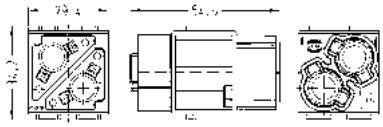
Han-Modular® , Han® 100 A module, Axial screw termination, Contact surface: Silver plated 	10 ... 25 16 ... 35 38	09 14 002 2653 09 14 002 2651 09 14 002 2650	09 14 002 2753 09 14 002 2751 09 14 002 2750	M 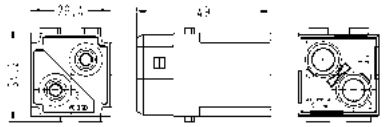 F 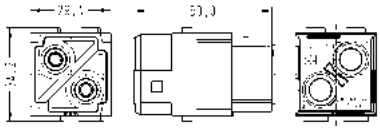 Stripping length 12 ... 14 mm Tightening torque 6 Nm @ 10 ... 16 mm², 7 Nm @ 25 mm², 8 Nm @ 35 ... 38 mm²
TC 100 , Crimp contact, Contact surface: Silver plated 	10 16 25 35	09 11 000 6114 09 11 000 6116 09 11 000 6125 09 11 000 6135	09 11 000 6214 09 11 000 6216 09 11 000 6225 09 11 000 6235	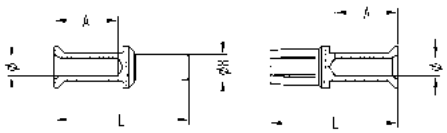 Wire gauge / ∅ / Stripping length A 10 mm² / 4.3 / 19 mm 16 mm² / 5.5 / 19 mm 25 mm² / 7 / 19 mm 35 mm² / 8.2 / 16 mm for stranded wire according to IEC 60 228 Class 5

Features

- Crimp or axial screw termination available
- Unlock of contacts with a screw driver from mating side
- Separate axial screw contacts can be terminated without any special tools directly to the wire

Technical characteristics

Number of contacts	1
Electrical data acc. to IEC 61984	100 A 830 V 8 kV 3
Rated current	100 A
Rated voltage	830 V
Rated impulse voltage	8 kV
Pollution degree	3
Rated voltage acc. to UL	600 V
Insulation resistance	≥10^{10} Ω
Contact resistance	≤0.3 mΩ
Limiting temperature	-40 ... +125 °C
Mating cycles	≥500
Material (insert)	Polycarbonate
Colour (insert)	RAL 7032 (pebble grey)
Material (contacts)	Copper alloy
Material flammability class acc. to UL 94	V-0
RoHS	compliant, compliant with exemption
RoHS exemptions	**6c:** Copper alloy containing up to 4 % lead by weight, **6a:** Lead as an alloying element in steel for machining purposes and in galvanised steel containing up to 0,35 % lead by weight

Derating

Current carrying capacity

The current carrying capacity of the connectors is limited by the thermal load capability of the contact element material including the connections and the insulating parts. The derating curve is therefore valid for currents which flow constantly (non-intermittent) through each contact element of the connector evenly, without exceeding the allowed maximum temperature.

Measuring and testing techniques acc. to IEC 60512-5-2

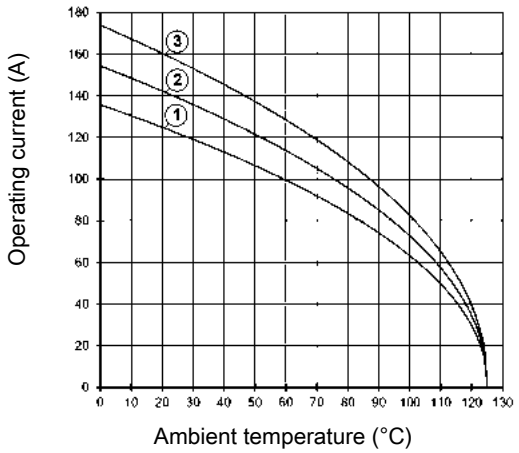

① Conductor cross-section 16 mm²
② Conductor cross-section 25 mm²
③ Conductor cross-section 35 mm²

Specifications and approvals

EN 60664-1
IEC 61984
UL 1977 ECBT2.E235076
UL 2237 PVVA2.E318390
CSA-C22.2 No. 182.3 PVVA8.E318390
DNV GL

Details

Hex key (A/F 4) see chapter 90

For more technical details (i.e. number of crimping operations or crimping position) see eCatalogue

Remarks on the axial screw technique

The wire gauges mentioned in the catalogue refer to geometric wire gauges of cables.

Crimping tools see chapter 90

Remarks on the crimp technique

The wire gauges mentioned in the catalogue refer to geometric wire gauges of cables.

Han® 100 A Single module

Number of contacts

1

100 A 830 V 8 kV 3

Identification	Conductor cross-section (mm²)	Part number Male	Part number Female	Drawing (dimensions in mm)
Han-Modular® , Han® 100 A module, Single module  Please order contacts separately.	10 ... 35	09 14 001 3031	09 14 001 3131	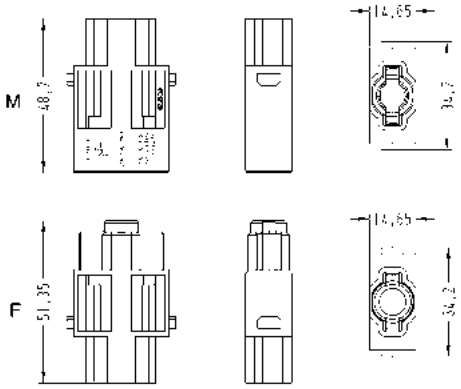
TC 100 , Crimp contact, Contact surface: Silver plated 	10 16 25 35	09 11 000 6114 09 11 000 6116 09 11 000 6125 09 11 000 6135	09 11 000 6214 09 11 000 6216 09 11 000 6225 09 11 000 6235	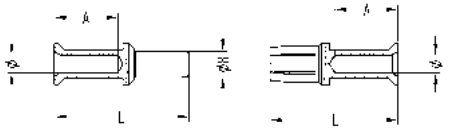 Wire gauge / ∅ / Stripping length A 10 mm² / 4.3 / 19 mm 16 mm² / 5.5 / 19 mm 25 mm² / 7 / 19 mm 35 mm² / 8.2 / 16 mm for stranded wire according to IEC 60 228 Class 5
TC 100 , Axial screw contact, Contact surface: Silver plated 	10 ... 25 16 ... 35	09 11 000 6112 09 11 000 6113	09 11 000 6212 09 11 000 6213	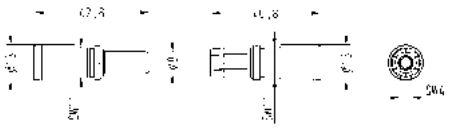 Stripping length 13 mm Tightening torque mm² 10 16 25 35 Nm 6 6 7 8

Features

- for power circuits
- Male inserts with protection collar
- Polarisation of module

Technical characteristics

Number of contacts	2
Electrical data acc. to IEC 61984	70 A 1.000 V 8 kV 3
Rated current	70 A
Rated voltage	1000 V
Rated impulse voltage	8 kV
Pollution degree	3
Insulation resistance	≥10^{10} Ω
Contact resistance	≤0.5 mΩ
Limiting temperature	-40 ... +125 °C
Mating cycles	≥500
Material (insert)	Polycarbonate
Colour (insert)	RAL 7032 (pebble grey)
Material (contacts)	Copper alloy
Material flammability class acc. to UL 94	V-0
RoHS	compliant, compliant with exemption
RoHS exemptions	**6a:** Lead as an alloying element in steel for machining purposes and in galvanised steel containing up to 0,35 % lead by weight, **6c:** Copper alloy containing up to 4 % lead by weight

Derating

Current carrying capacity

The current carrying capacity of the connectors is limited by the thermal load capability of the contact element material including the connections and the insulating parts. The derating curve is therefore valid for currents which flow constantly (non-intermittent) through each contact element of the connector evenly, without exceeding the allowed maximum temperature.

Measuring and testing techniques acc. to IEC 60512-5-2

Crimp termination

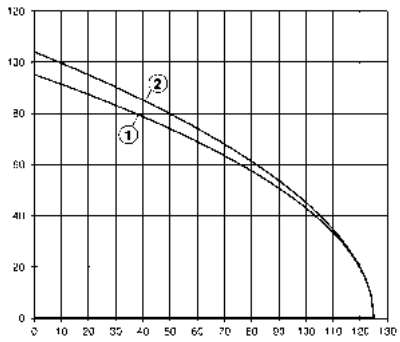

① 24 B hoods/housings with 6 modules Conductor cross-section 16 mm²
② 24 B hoods/housings with 6 modules Conductor cross-section 25 mm²

Derating

Axial screw termination

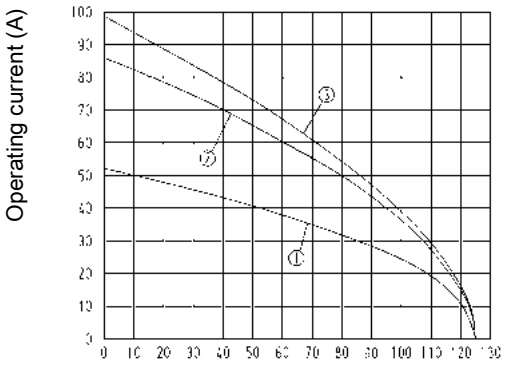

① 24 B hoods/housings with 6 modules Conductor cross-section 6 mm²
② 24 B hoods/housings with 6 modules Conductor cross-section 16 mm²
③ 24 B hoods/housings with 6 modules Conductor cross-section 22 mm²

Specifications and approvals

EN 60664-1
IEC 61984
UL 1977 ECBT2.E235076
CSA-C22.2 No. 182.3 ECBT8.E235076
UL 2237 PVVA2.E318390
CSA-C22.2 No. 182.3 PVVA8.E318390
DNV GL

Details

Remarks on the axial screw technique

The wire gauges mentioned in the catalogue refer to geometric wire gauges of cables.

Hex key (A/F 2.5) see chapter 90

For more technical details (i.e. number of crimping operations or crimping position) see eCatalogue

Crimping tools see chapter 90

Remarks on the crimp technique

The wire gauges mentioned in the catalogue refer to geometric wire gauges of cables.

Han® 70 A module

Number of contacts

2

70 A 1.000 V 8 kV 3

Identification	Conductor cross-section (mm²)	Part number Male	Part number Female	Drawing (dimensions in mm)
Han-Modular® , Han® 70 A module, Crimp termination  Please order crimp contacts separately.	10 ... 25	09 14 002 3041	09 14 002 3141	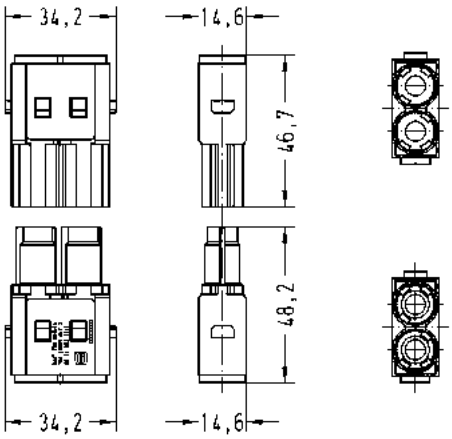
Han-Modular® , Han® 70 A module, Axial screw termination, Contact surface: Silver plated  Finger safe	6 ... 16 14 ... 22	09 14 002 2641 09 14 002 2642		
Han-Modular® , Han® 70 A module, Axial screw termination, Contact surface: Silver plated 	6 ... 16 14 ... 22	09 14 002 2646 09 14 002 2647	09 14 002 2741 09 14 002 2742	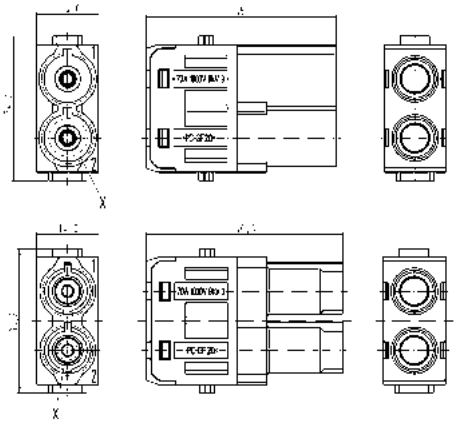 6 ... 16 mm²: Stripping length 11 ... 12 mm 14 ... 22 mm²: Stripping length 12,5 ... 13.5 mm Tightening torque 2 Nm @ 6 mm², 3 Nm @ 10 mm², 4 Nm @ 14 mm², 4 Nm @ 16 mm², 4 Nm @ 22 mm²

Identification	Conductor cross-section (mm²)	Part number Male	Part number Female	Drawing (dimensions in mm)
TC 70 , Crimp contact, Contact surface: Silver plated 	10 16 25	09 11 000 6131 09 11 000 6132 09 11 000 6133	09 11 000 6231 09 11 000 6232 09 11 000 6233	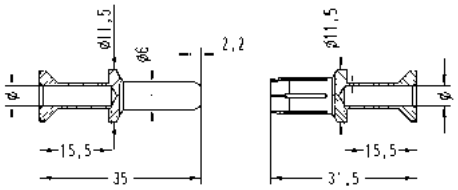

電線サイズ	∅	ストリップ長さ A
10 mm²	4.3	15.5 mm
16 mm²	5.5	15.5 mm
25 mm²	7	15.5 mm
より線用 (IEC 60 228 Class 5準拠)		

Han® 70 A Hybrid module

Features

- Axial screw termination
- for power circuits
- Male inserts with protection collar
- Polarisation of module

Technical characteristics

Number of contacts	1
Additional contacts	+ 4 additional signal contacts
Electrical data acc. to IEC 61984	70 A 1.000 V 8 kV 3
Rated current	70 A
Rated voltage	1000 V
Rated impulse voltage	8 kV
Pollution degree	3
Electrical data, signal	16 A 400 V 6 kV 3
Rated current (signal)	16 A
Rated voltage (signal)	400 V
Rated impulse voltage (signal)	6 kV
Pollution degree (signal)	3
Insulation resistance	≥10^{10} Ω
Contact resistance	≤0.5 mΩ, ≤1 mΩ
Limiting temperature	-40 ... +125 °C
Mating cycles	≥500
Material (insert)	Polycarbonate
Colour (insert)	RAL 7032 (pebble grey)
Material (contacts)	Copper alloy
Material flammability class acc. to UL 94	V-0
RoHS	compliant with exemption
RoHS exemptions	**6a:** Lead as an alloying element in steel for machining purposes and in galvanised steel containing up to 0,35 % lead by weight, **6c:** Copper alloy containing up to 4 % lead by weight

Specifications and approvals

EN 60664-1
IEC 61984
UL 1977 ECBT2.E235076
DNV GL

Details

Hex key (A/F 2.5) see chapter 90

Remarks on the axial screw technique

The wire gauges mentioned in the catalogue refer to geometric wire gauges of cables.

Contact resistance axial screw contact: ≤ 0.5 mOhm

Contact resistance Han E® crimp contact: ≤ 1 mOhm

Crimping tools see chapter 90

Remarks on the crimp technique

The wire gauges mentioned in the catalogue refer to geometric wire gauges of cables.

Han® 70 A Hybrid module

Number of contacts

1

70 A 1.000 V 8 kV 3
+ 4 additional signal contacts
16 A 400 V 6 kV 3

Identification	Conductor cross-section (mm²)	Part number Male	Part number Female	Drawing (dimensions in mm)
Han-Modular® , Han® 70 A Hybrid module, Axial screw termination / crimp termination  Please order signal contacts separately.	6 ... 16 14 ... 22	09 14 005 2646 09 14 005 2647	09 14 005 2741 09 14 005 2742	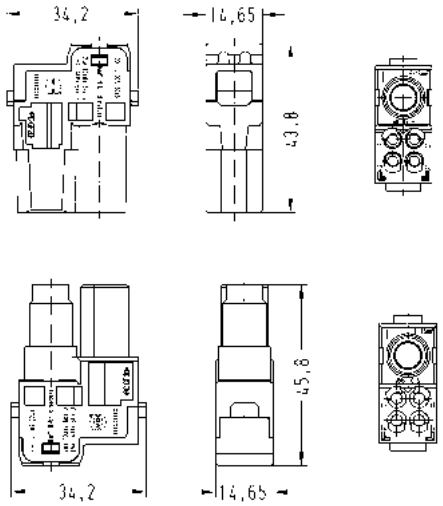 6 ... 16 mm²: Stripping length 11 ... 12 mm 14 ... 22 mm²: Stripping length 12,5 ... 13.5 mm Tightening torque 2 Nm @ 6 mm², 3 Nm @ 10 mm², 4 Nm @ 14 mm², 4 Nm @ 16 mm², 4 Nm @ 22 mm²
Han E® , Crimp contact, Contact surface: Silver plated 	0,14 ... 0,37 0,5 0,75 1 1,5 2,5 3 4	09 33 000 6127 09 33 000 6121 09 33 000 6114 09 33 000 6105 09 33 000 6104 09 33 000 6102 09 33 000 6106 09 33 000 6107	09 33 000 6227 09 33 000 6220 09 33 000 6214 09 33 000 6205 09 33 000 6204 09 33 000 6202 09 33 000 6206 09 33 000 6207	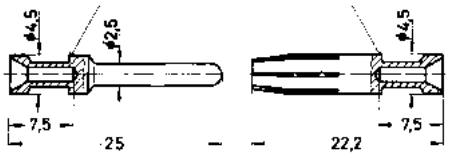

Conductor cross-section		Identification
0.14-0.37 mm²	AWG 26-22	no groove
0.5 mm²	AWG 20	no groove
0.75 mm²	AWG 18	1 groove*
1 mm²	AWG 18	1 groove
1.5 mm²	AWG 16	2 grooves
2.5 mm²	AWG 14	3 grooves
3 mm²	AWG 12	wide groove
4 mm²	AWG 12	no groove
* on the back crimp collar		

Stripping length 7.5 mm

Identification	Conductor cross-section (mm²)	Part number Male	Part number Female	Drawing (dimensions in mm)
Han E® , Crimp contact, Contact surface: Gold plated 	0,14 ... 0,37 0,5 0,75 1 1,5 2,5 4	09 33 000 6117 09 33 000 6122 09 33 000 6115 09 33 000 6118 09 33 000 6116 09 33 000 6123 09 33 000 6119	09 33 000 6217 09 33 000 6222 09 33 000 6215 09 33 000 6218 09 33 000 6216 09 33 000 6223 09 33 000 6221	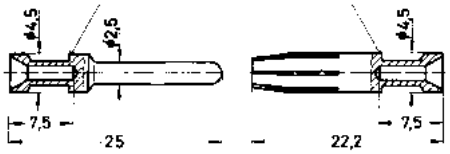

Conductor cross-section		Identification
0.14-0.37 mm²	AWG 26-22	no groove
0.5 mm²	AWG 20	no groove
0.75 mm²	AWG 18	1 groove*
1 mm²	AWG 18	1 groove
1.5 mm²	AWG 16	2 grooves
2.5 mm²	AWG 14	3 grooves
3 mm²	AWG 12	wide groove
4 mm²	AWG 12	no groove
* on the back crimp collar		

Stripping length 7.5 mm

Features

- Crimp or axial screw termination available
- No special tools required for axial-screw termination

Technical characteristics

Number of contacts	2
Electrical data acc. to IEC 61984	40 A 1.000 V 8 kV 3
Rated current	40 A
Rated voltage	1000 V
Rated impulse voltage	8 kV
Pollution degree	3
Rated voltage acc. to UL	600 V
Insulation resistance	$\geq 10^{10}$ Ω
Contact resistance	≤0.3 mΩ, ≤1 mΩ
Limiting temperature	-40 ... +125 °C
Mating cycles	≥500
Material (insert)	Polycarbonate
Colour (insert)	RAL 7032 (pebble grey)
Material (contacts)	Copper alloy
Material flammability class acc. to UL 94	V-0
RoHS	compliant, compliant with exemption
RoHS exemptions	**6c:** Copper alloy containing up to 4 % lead by weight

Derating

Current carrying capacity

The current carrying capacity of the connectors is limited by the thermal load capability of the contact element material including the connections and the insulating parts. The derating curve is therefore valid for currents which flow constantly (non-intermittent) through each contact element of the connector evenly, without exceeding the allowed maximum temperature.

Measuring and testing techniques acc. to IEC 60512-5-2

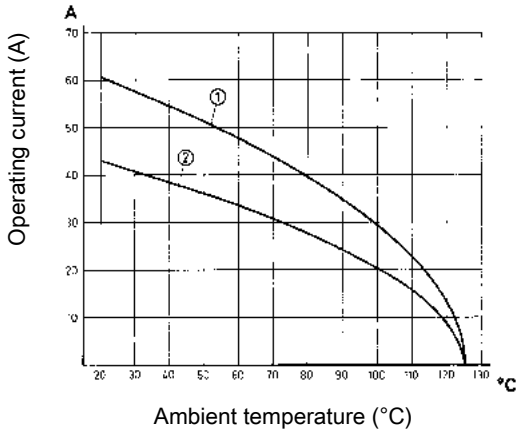

Ambient temperature (°C)

① 24 B hoods/housings with 6 modules Conductor cross-section 10 mm²
② 24 B hoods/housings with 6 modules Conductor cross-section 6 mm²

Specifications and approvals

EN 60664-1
IEC 61984
UL 1977 ECBT2.E235076
DNV GL
CSA-C22.2 No. 182.3 ECBT8.E235076
UL 2237 PVVA2.E318390
CSA-C22.2 No. 182.3 PVVA8.E318390

Details

Contact resistance Han® C crimp contact: ≤ 1 mOhm

Contact resistance axial screw contact: ≤ 0.3 mOhm

Hex key (A/F 2) see chapter 90

Remarks on the axial screw technique
The wire gauges mentioned in the catalogue refer to geometric wire gauges of cables.

Crimping tools see chapter 90

Remarks on the crimp technique
The wire gauges mentioned in the catalogue refer to geometric wire gauges of cables.

Han® 40 A module

Number of contacts

2

40 A 1.000 V 8 kV 3

Identification	Conductor cross-section (mm²)	Part number Male	Part number Female	Drawing (dimensions in mm)
Han-Modular® , Han® 40 A module, Crimp termination  Please order crimp contacts separately.	1,5 ... 10	09 14 002 3002	09 14 002 3102	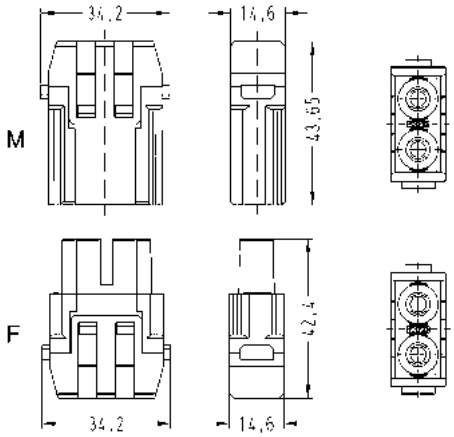 Contact arrangement (view from termination side)
Han-Modular® , Han® 40 A module, Axial screw termination, Contact surface: Silver plated 	2,5 ... 8 6 ... 10	09 14 002 2601 09 14 002 2602	09 14 002 2701 09 14 002 2702	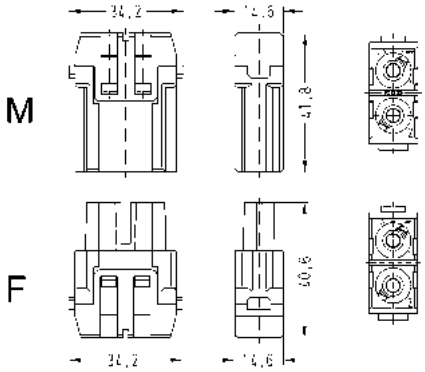 Contact arrangement (view from termination side) Stripping length mm² 2,5 4 6 10 mm 5+1 5+1 8+1 11+1 Tightening torque mm² 2,5 4 6 10 Nm 1,5 1,5 2 2

Han® 40 A module

Identification	Conductor cross-section (mm²)	Part number Male	Part number Female	Drawing (dimensions in mm)
Han® C , Crimp contact, Contact surface: Silver plated 	1,5 2,5 4 6 10	09 32 000 6104 09 32 000 6105 09 32 000 6107 09 32 000 6108 09 32 000 6109	09 32 000 6204 09 32 000 6205 09 32 000 6207 09 32 000 6208 09 32 000 6209	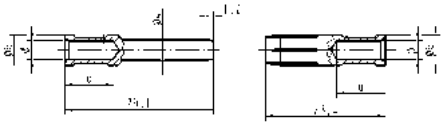

Conductor cross-section	Ø	Stripping length
1.5 mm² AWG 16	1.75 mm	9.5 mm
2.5 mm² AWG 14	2.25 mm	9.5 mm
4 mm² AWG 12	2.85 mm	9.5 mm
6 mm² AWG 10	3.5 mm	9.5 mm
10 mm² AWG 8	4.3 mm	12 mm

Features

- Standard module for power up to 40 A
- No special tools required for axial-screw termination

Technical characteristics

Number of contacts	3
Electrical data acc. to IEC 61984	40 A 690 V 8 kV 3
Rated current	40 A
Rated voltage	690 V
Rated impulse voltage	8 kV
Pollution degree	3
Rated current acc. to UL	40 A
Rated voltage acc. to UL	600 V
Insulation resistance	≥10^{10} Ω
Contact resistance	≤0.3 mΩ, ≤1 mΩ
Limiting temperature	-40 ... +125 °C
Mating cycles	≥500
Material (insert)	Polycarbonate
Colour (insert)	RAL 7032 (pebble grey)
Material (contacts)	Copper alloy
Material flammability class acc. to UL 94	V-0
RoHS	compliant, compliant with exemption
RoHS exemptions	**6c:** Copper alloy containing up to 4 % lead by weight

Derating

Current carrying capacity

The current carrying capacity of the connectors is limited by the thermal load capability of the contact element material including the connections and the insulating parts. The derating curve is therefore valid for currents which flow constantly (non-intermittent) through each contact element of the connector evenly, without exceeding the allowed maximum temperature.

Measuring and testing techniques acc. to IEC 60512-5-2

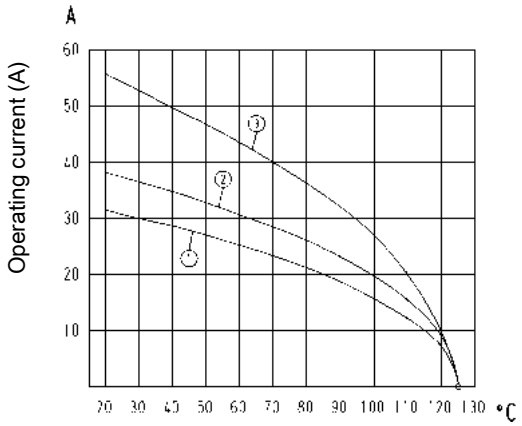

① 24 B hoods/housings with 6 modules Conductor cross-section 4 mm²
② 24 B hoods/housings with 6 modules Conductor cross-section 6 mm²
③ 24 B hoods/housings with 6 modules Conductor cross-section 10 mm²

Specifications and approvals

EN 60664-1
IEC 61984
UL 1977 ECBT2.E235076
DNV GL
UL 2237 PVVA2.E318390
CSA-C22.2 No. 182.3 PVVA8.E318390

Details

Contact resistance Han® C crimp contact: ≤ 1 mOhm

Contact resistance axial screw contact: ≤ 0.3 mOhm

Hex key (A/F 2) see chapter 90

Remarks on the axial screw technique
The wire gauges mentioned in the catalogue refer to geometric wire gauges of cables.

Crimping tools see chapter 90

Remarks on the crimp technique
The wire gauges mentioned in the catalogue refer to geometric wire gauges of cables.

Han® C module

Number of contacts

3

40 A 690 V 8 kV 3

Identification	Conductor cross-section (mm²)	Part number Male	Part number Female	Drawing (dimensions in mm)
Han-Modular® , Han® C module, Crimp termination  Please order crimp contacts separately.	1,5 ... 6	09 14 003 3001	09 14 003 3101	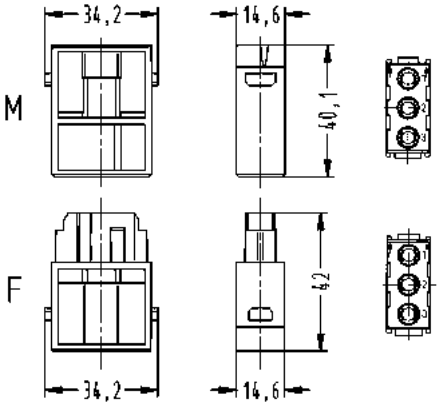 Contact arrangement (view from termination side)
Han-Modular® , Han® C module, Axial screw termination, Contact surface: Silver plated 	2,5 ... 8 6 ... 10	09 14 003 2601 09 14 003 2602	09 14 003 2701 09 14 003 2702	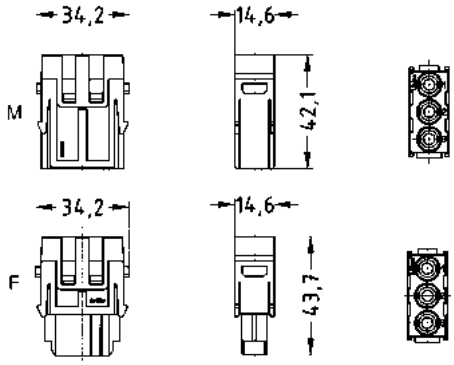 Contact arrangement (view from termination side) Stripping length mm² 2,5 4 6 10 mm 5^{+1} 5^{+1} 8^{+1} 11^{+1} Tightening torque mm² 2,5 4 6 10 Nm 1,5 1,5 2 2

Han® C module

Identification	Conductor cross-section (mm²)	Part number Male	Part number Female	Drawing (dimensions in mm)
Han® C , Crimp contact, Contact surface: Silver plated 	1,5 2,5 4 6	09 32 000 6104 09 32 000 6105 09 32 000 6107 09 32 000 6108	09 32 000 6204 09 32 000 6205 09 32 000 6207 09 32 000 6208	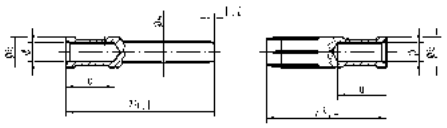

Conductor cross-section		Ø	Stripping length
1.5 mm²	AWG 16	1.75 mm	9.5 mm
2.5 mm²	AWG 14	2.25 mm	9.5 mm
4 mm²	AWG 12	2.85 mm	9.5 mm
6 mm²	AWG 10	3.5 mm	9.5 mm
10 mm²	AWG 8	4.3 mm	12 mm

Features

- Suitable for Han® C crimp contacts
- Designed for a high working voltage up to 830 V
- Finger safe male and female contacts
- High density of contacts

Technical characteristics

Number of contacts	4
Electrical data acc. to IEC 61984	40 A 830 V 8 kV 3
Rated current	40 A
Rated voltage	830 V
Rated impulse voltage	8 kV
Pollution degree	3
Rated voltage acc. to UL	600 V
Insulation resistance	≥10^{10} Ω
Contact resistance	≤1 mΩ
Limiting temperature	-40 ... +125 °C
Mating cycles	≥500
Material (insert)	Polycarbonate
Colour (insert)	RAL 7032 (pebble grey)
Material (contacts)	Copper alloy
Material flammability class acc. to UL 94	V-0
RoHS	compliant, compliant with exemption
RoHS exemptions	**6c:** Copper alloy containing up to 4 % lead by weight

Derating

Current carrying capacity

The current carrying capacity of the connectors is limited by the thermal load capability of the contact element material including the connections and the insulating parts. The derating curve is therefore valid for currents which flow constantly (non-intermittent) through each contact element of the connector evenly, without exceeding the allowed maximum temperature.

Measuring and testing techniques acc. to IEC 60512-5-2

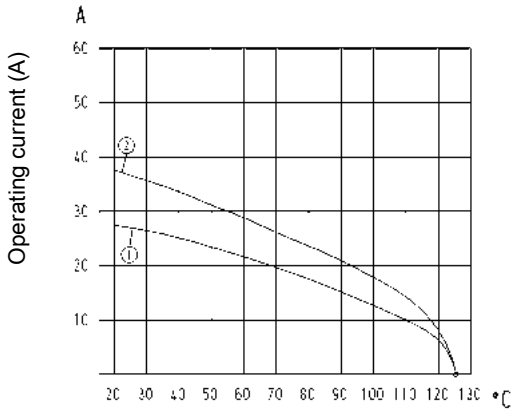

① 24 B hoods/housings with 6 modules Conductor cross-section 4 mm²
② 24 B hoods/housings with 6 modules Conductor cross-section 6 mm²

Specifications and approvals

EN 60664-1
IEC 61984
UL 1977 ECBT2.E235076
DNV GL

Details

Crimping tools see chapter 90

Remarks on the crimp technique

The wire gauges mentioned in the catalogue refer to geometric wire gauges of cables.

Han® CC Protected module

Number of contacts

4

40 A 830 V 8 kV 3

Identification	Conductor cross-section (mm²)	Part number Male	Part number Female	Drawing (dimensions in mm)
Han-Modular® , Han® CC Protected module, Crimp termination  Please order crimp contacts separately.	1,5 ... 6	09 14 004 3041	09 14 004 3141	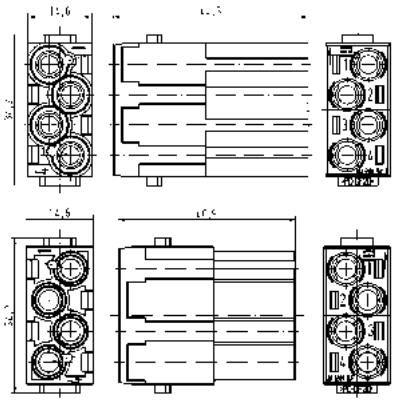
Han® C , Crimp contact, Contact surface: Silver plated 	1,5 2,5 4 6	09 32 000 6104 09 32 000 6105 09 32 000 6107 09 32 000 6108	09 32 000 6204 09 32 000 6205 09 32 000 6207 09 32 000 6208	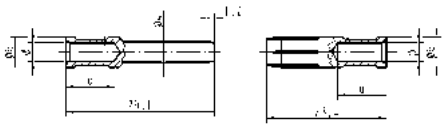 Conductor cross-section / Ø / Stripping length 1.5 mm² AWG 16 — 1.75 mm — 9.5 mm 2.5 mm² AWG 14 — 2.25 mm — 9.5 mm 4 mm² AWG 12 — 2.85 mm — 9.5 mm 6 mm² AWG 10 — 3.5 mm — 9.5 mm 10 mm² AWG 8 — 4.3 mm — 12 mm

Features

- 3 contacts (40 A) for power circuits and 4 contacts (10 A) for signal circuits
- Ideal as motor drive connector
- Finger safe male and female contacts

Technical characteristics

Number of contacts	3
Additional contacts	+ 4 additional signal contacts
Electrical data acc. to IEC 61984	40 A 830 V 8 kV 3
Rated current	40 A
Rated voltage	830 V
Rated impulse voltage	8 kV
Pollution degree	3
Electrical data, signal	10 A 830 V 8 kV 3
Rated current (signal)	10 A
Rated voltage (signal)	830 V
Rated impulse voltage (signal)	8 kV
Pollution degree (signal)	3
Rated voltage acc. to UL	600 V
Insulation resistance	≥10^{10} Ω
Contact resistance	≤1 mΩ, ≤3 mΩ
Limiting temperature	-40 ... +125 °C
Mating cycles	≥500
Wire outer diameter	≤5 mm
Material (insert)	Polycarbonate
Colour (insert)	RAL 7032 (pebble grey)
Material (contacts)	Copper alloy
Material flammability class acc. to UL 94	V-0
RoHS	compliant, compliant with exemption
RoHS exemptions	**6c:** Copper alloy containing up to 4 % lead by weight

Derating

Current carrying capacity

The current carrying capacity of the connectors is limited by the thermal load capability of the contact element material including the connections and the insulating parts. The derating curve is therefore valid for currents which flow constantly (non-intermittent) through each contact element of the connector evenly, without exceeding the allowed maximum temperature.

Measuring and testing techniques acc. to IEC 60512-5-2

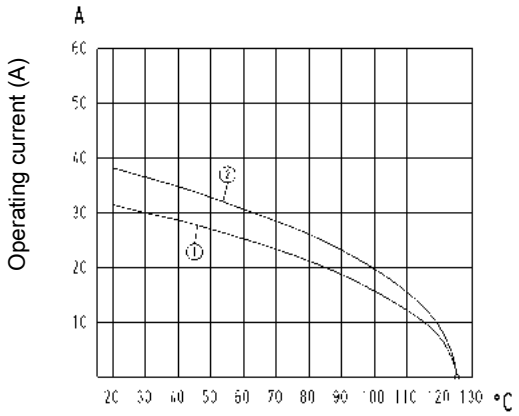

① 24 B hoods/housings with 6 modules Conductor cross-section 4 mm²
② 24 B hoods/housings with 6 modules Conductor cross-section 6 mm²

Specifications and approvals

EN 60664-1
IEC 61984
UL 1977 ECBT2.E235076
DNV GL

Details

Contact resistance Han D® crimp contact: ≤ 3 mOhm

Contact resistance Han® C crimp contact: ≤ 1 mOhm

Crimping tools see chapter 90

Remarks on the crimp technique

The wire gauges mentioned in the catalogue refer to geometric wire gauges of cables.

Han® CD module

Number of contacts

3

40 A 830 V 8 kV 3
+ 4 additional signal contacts
10 A 830 V 8 kV 3

Identification	Conductor cross-section (mm²)	Part number Male	Part number Female	Drawing (dimensions in mm)
Han-Modular® , Han® CD module, Crimp termination  Please order crimp contacts separately.	0,14 ... 6	09 14 007 3001	09 14 007 3101	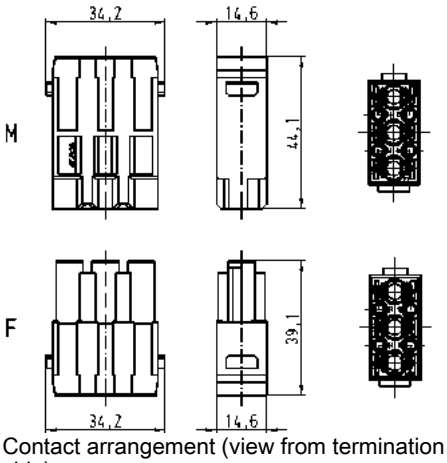 Contact arrangement (view from termination side)
Han® C , Crimp contact, Contact surface: Silver plated 	1,5 2,5 4 6	09 32 000 6104 09 32 000 6105 09 32 000 6107 09 32 000 6108	09 32 000 6204 09 32 000 6205 09 32 000 6207 09 32 000 6208	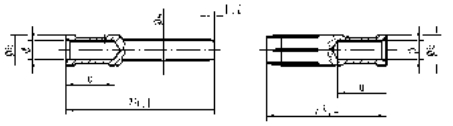 Conductor cross-section / Ø / Stripping length 1.5 mm² AWG 16 / 1.75 mm / 9.5 mm 2.5 mm² AWG 14 / 2.25 mm / 9.5 mm 4 mm² AWG 12 / 2.85 mm / 9.5 mm 6 mm² AWG 10 / 3.5 mm / 9.5 mm 10 mm² AWG 8 / 4.3 mm / 12 mm
Han D® , Crimp contact, Contact surface: Silver plated 	0,14 ... 0,37 0,5 0,75 1 1,5 2,5	09 15 000 6104 09 15 000 6103 09 15 000 6105 09 15 000 6102 09 15 000 6101 09 15 000 6106	09 15 000 6204 09 15 000 6203 09 15 000 6205 09 15 000 6202 09 15 000 6201 09 15 000 6206	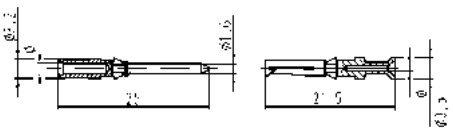 Wire gauge / Ø / Stripping length 0.14-0.37 mm² AWG 26-22 / 0.9 mm / 8 mm 0.5 mm² AWG 20 / 1.1 mm / 8 mm 0.75 mm² AWG 18 / 1.3 mm / 8 mm 1 mm² AWG 18 / 1.45 mm / 8 mm 1.5 mm² AWG 16 / 1.75 mm / 8 mm 2.5 mm² AWG 14 / 2.25 mm / 6 mm

Han® CD module

Identification	Conductor cross-section (mm²)	Part number Male	Part number Female	Drawing (dimensions in mm)
Han D® , Crimp contact, Contact surface: Gold plated 	0,14 ... 0,37 0,5 0,75 1 1,5 2,5	09 15 000 6124 09 15 000 6123 09 15 000 6125 09 15 000 6122 09 15 000 6121 09 15 000 6126	09 15 000 6224 09 15 000 6223 09 15 000 6225 09 15 000 6222 09 15 000 6221 09 15 000 6226	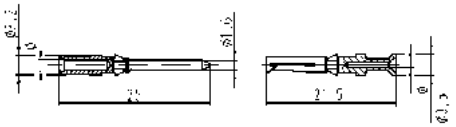

Wire gauge		∅	Stripping length
0.14-0.37 mm²	AWG 26-22	0.9 mm	8 mm
0.5 mm²	AWG 20	1.1 mm	8 mm
0.75 mm²	AWG 18	1.3 mm	8 mm
1 mm²	AWG 18	1.45 mm	8 mm
1.5 mm²	AWG 16	1.75 mm	8 mm
2.5 mm²	AWG 14	2.25 mm	6 mm

Features

- Standard module for power up to 16 A
- Han-Quick Lock® or crimp termination available

Technical characteristics

Number of contacts	6
Electrical data acc. to IEC 61984	16 A 500 V 6 kV 3
Rated current	16 A
Rated voltage	500 V
Rated impulse voltage	6 kV
Pollution degree	3
Rated voltage acc. to UL	600 V
Insulation resistance	≥10^{10} Ω
Contact resistance	≤1 mΩ
Limiting temperature	-40 ... +125 °C
Mating cycles	≥500
Mating cycles with other HMC components	≥10000
Material (insert)	Polycarbonate
Colour (insert)	RAL 7032 (pebble grey)
Material (contacts)	Copper alloy
Material flammability class acc. to UL 94	V-0
RoHS	compliant with exemption, compliant
RoHS exemptions	**6c:** Copper alloy containing up to 4 % lead by weight

Derating

Current carrying capacity

The current carrying capacity of the connectors is limited by the thermal load capability of the contact element material including the connections and the insulating parts. The derating curve is therefore valid for currents which flow constantly (non-intermittent) through each contact element of the connector evenly, without exceeding the allowed maximum temperature.

Measuring and testing techniques acc. to IEC 60512-5-2

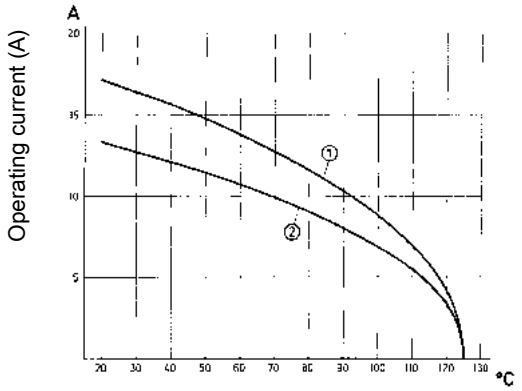

Ambient temperature (°C)

① 24 B hoods/housings with 6 modules Conductor cross-section 2.5 mm²
② 24 B hoods/housings with 6 modules Conductor cross-section 1.5 mm²

Specifications and approvals

EN 60664-1
IEC 61984
UL 1977 ECBT2.E235076
UL 2237 PVVA2.E318390
CSA-C22.2 No. 182.3 PVVA8.E318390
DNV GL
CSA-C22.2 No. 182.3 ECBT8.E235076

Details

Crimping tools see chapter 90

Remarks on the crimp technique

The wire gauges mentioned in the catalogue refer to geometric wire gauges of cables.

Number of contacts

6

16 A 500 V 6 kV 3

Identification	Conductor cross-section (mm²)	Part number Male	Part number Female	Drawing (dimensions in mm)
Han-Modular® , Han E® module, Han-Quick Lock® termination, Contact surface: Silver plated 	0,5 ... 2,5	09 14 006 2633	09 14 006 2733	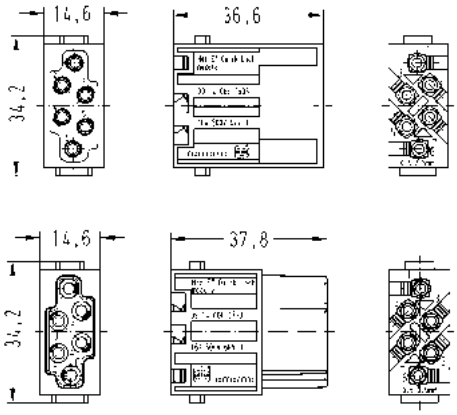 Contact arrangement (view from termination side)
Han-Modular® , Han E® module, Crimp termination  Please order crimp contacts separately.	0,14 ... 4	09 14 006 3001	09 14 006 3101	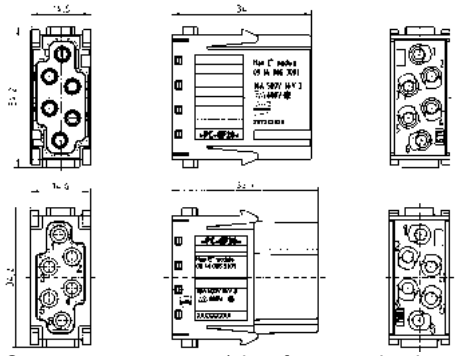 Contact arrangement (view from termination side)
Han E® , Crimp contact, Contact surface: Silver plated 	0,14 ... 0,37 0,5 0,75 1 1,5 2,5 3 4	09 33 000 6127 09 33 000 6121 09 33 000 6114 09 33 000 6105 09 33 000 6104 09 33 000 6102 09 33 000 6106 09 33 000 6107	09 33 000 6227 09 33 000 6220 09 33 000 6214 09 33 000 6205 09 33 000 6204 09 33 000 6202 09 33 000 6206 09 33 000 6207	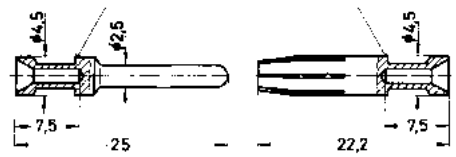

Conductor cross-section		Identification
0.14-0.37 mm²	AWG 26-22	no groove
0.5 mm²	AWG 20	no groove
0.75 mm²	AWG 18	1 groove*
1 mm²	AWG 18	1 groove
1.5 mm²	AWG 16	2 grooves
2.5 mm²	AWG 14	3 grooves
3 mm²	AWG 12	wide groove
4 mm²	AWG 12	no groove
* on the back crimp collar		

Stripping length 7.5 mm

Identification	Conductor cross-section (mm²)	Part number Male	Part number Female	Drawing (dimensions in mm)
Han E® , Crimp contact, Contact surface: Gold plated 	0,14 ... 0,37 0,5 0,75 1 1,5 2,5 4	09 33 000 6117 09 33 000 6122 09 33 000 6115 09 33 000 6118 09 33 000 6116 09 33 000 6123 09 33 000 6119	09 33 000 6217 09 33 000 6222 09 33 000 6215 09 33 000 6218 09 33 000 6216 09 33 000 6223 09 33 000 6221	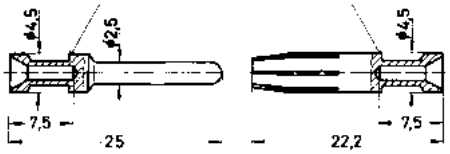

Conductor cross-section		Identification
0.14-0.37 mm²	AWG 26-22	no groove
0.5 mm²	AWG 20	no groove
0.75 mm²	AWG 18	1 groove*
1 mm²	AWG 18	1 groove
1.5 mm²	AWG 16	2 grooves
2.5 mm²	AWG 14	3 grooves
3 mm²	AWG 12	wide groove
4 mm²	AWG 12	no groove
* on the back crimp collar		

Stripping length 7.5 mm

Number of contacts

5

16 A 230/400 V 4 kV 3

Features

- Screw connection, suitable for all users around the world
- No special tools required
- for flexible and solid conductors from 0.5 to 2.5 mm²
- Additional protection against voltage and accidental contact by a sliding insulation cover which closes automatically during mating.

Technical characteristics

Number of contacts	5
Electrical data acc. to IEC 61984	16 A 230/400 V 4 kV 3
Rated current	16 A
Rated voltage conductor-earth	230 V
Rated voltage conductor-conductor	400 V
Rated impulse voltage	4 kV
Pollution degree	3
Insulation resistance	≥10^{10} Ω
Contact resistance	≤1 mΩ
Limiting temperature	-40 ... +125 °C
Mating cycles	≥500
Material (insert)	Polycarbonate
Colour (insert)	RAL 7032 (pebble grey)
Material (contacts)	Copper alloy
Material flammability class acc. to UL 94	V-0
RoHS	compliant with exemption
RoHS exemptions	**6c:** Copper alloy containing up to 4 % lead by weight

Derating

Current carrying capacity

The current carrying capacity of the connectors is limited by the thermal load capability of the contact element material including the connections and the insulating parts. The derating curve is therefore valid for currents which flow constantly (non-intermittent) through each contact element of the connector evenly, without exceeding the allowed maximum temperature.

Measuring and testing techniques acc. to IEC 60512-5-2

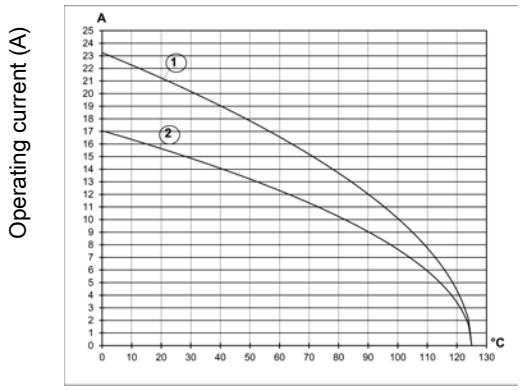

Ambient temperature (°C)

① Conductor cross-section 2.5 mm²
② Conductor cross-section 1.5 mm²

Specifications and approvals

EN 60664-1
IEC 61984
UL 1977 ECBT2.E235076
UL 2237 PVVA2.E318390
CSA-C22.2 No. 182.3 PVVA8.E318390
DNV GL

Han E® Screw module

Identification	Conductor cross-section (mm²)	Part number Male	Part number Female	Drawing (dimensions in mm)
Han-Modular® , Han E® module, Screw termination, Contact surface: Silver plated 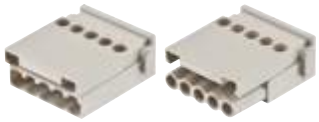	0,5 ... 2,5	09 14 005 2601	09 14 005 2701	M 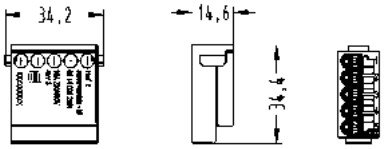 F 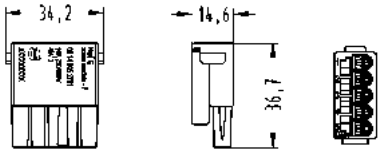 Stripping length 7.5 mm Tightening torque 0.5 Nm

Features

- Suitable for Han E® crimp contacts
- Designed for a high working voltage up to 830 V
- Finger safe male and female contacts

Technical characteristics

Number of contacts	6
Electrical data acc. to IEC 61984	16 A 830 V 8 kV 3
Rated current	16 A
Rated voltage	830 V
Rated impulse voltage	8 kV
Pollution degree	3
Rated voltage acc. to UL	600 V
Insulation resistance	≥10^{10} Ω
Contact resistance	≤1 mΩ
Limiting temperature	-40 ... +125 °C
Mating cycles	≥500
Mating cycles with other HMC components	≥10000
Material (insert)	Polycarbonate
Colour (insert)	RAL 7032 (pebble grey)
Material (contacts)	Copper alloy
Material flammability class acc. to UL 94	V-0
RoHS	compliant, compliant with exemption
RoHS exemptions	**6c:** Copper alloy containing up to 4 % lead by weight

Derating

Current carrying capacity

The current carrying capacity of the connectors is limited by the thermal load capability of the contact element material including the connections and the insulating parts. The derating curve is therefore valid for currents which flow constantly (non-intermittent) through each contact element of the connector evenly, without exceeding the allowed maximum temperature.

Measuring and testing techniques acc. to IEC 60512-5-2

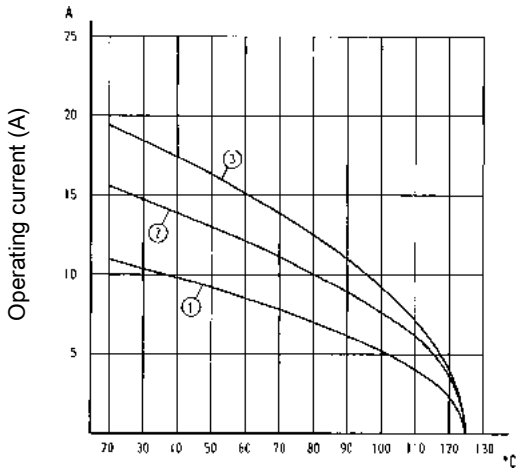

Ambient temperature (°C)

① 24 B hoods/housings with 6 modules Conductor cross-section 1.5 mm²
② 24 B hoods/housings with 6 modules Conductor cross-section 2.5 mm²
③ 24 B hoods/housings with 6 modules Conductor cross-section 4 mm²

Specifications and approvals

EN 60664-1
IEC 61984
UL 1977 ECBT2.E235076
CSA-C22.2 No. 182.3 ECBT8.E235076
UL 2237 PVVA2.E318390
CSA-C22.2 No. 182.3 PVVA8.E318390
DNV GL

Details

Crimping tools see chapter 90

Remarks on the crimp technique

The wire gauges mentioned in the catalogue refer to geometric wire gauges of cables.

Han E® Protected module

Number of contacts

6

16 A 830 V 8 kV 3

Identification	Conductor cross-section (mm²)	Part number Male	Part number Female	Drawing (dimensions in mm)
Han-Modular® , Han E® Protected module, Crimp termination  Please order crimp contacts separately.	0,14 ... 4	09 14 006 3041	09 14 006 3141	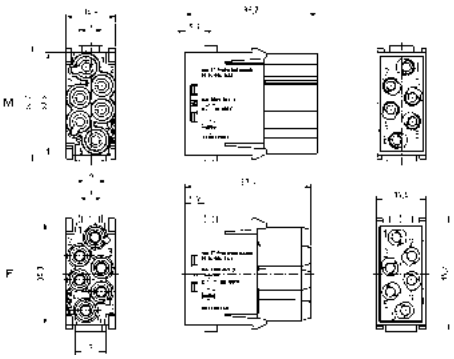 Contact arrangement (view from termination side)
Han E® , Crimp contact, Contact surface: Silver plated 	0,14 ... 0,37 0,5 0,75 1 1,5 2,5 3 4	09 33 000 6127 09 33 000 6121 09 33 000 6114 09 33 000 6105 09 33 000 6104 09 33 000 6102 09 33 000 6106 09 33 000 6107	09 33 000 6227 09 33 000 6220 09 33 000 6214 09 33 000 6205 09 33 000 6204 09 33 000 6202 09 33 000 6206 09 33 000 6207	 Conductor cross-section / Identification 0.14-0.37 mm² AWG 26-22 — no groove 0.5 mm² AWG 20 — no groove 0.75 mm² AWG 18 — 1 groove* 1 mm² AWG 18 — 1 groove 1.5 mm² AWG 16 — 2 grooves 2.5 mm² AWG 14 — 3 grooves 3 mm² AWG 12 — wide groove 4 mm² AWG 12 — no groove * on the back crimp collar Stripping length 7.5 mm
Han E® , Crimp contact, Contact surface: Gold plated 	0,14 ... 0,37 0,5 0,75 1 1,5 2,5 4	09 33 000 6117 09 33 000 6122 09 33 000 6115 09 33 000 6118 09 33 000 6116 09 33 000 6123 09 33 000 6119	09 33 000 6217 09 33 000 6222 09 33 000 6215 09 33 000 6218 09 33 000 6216 09 33 000 6223 09 33 000 6221	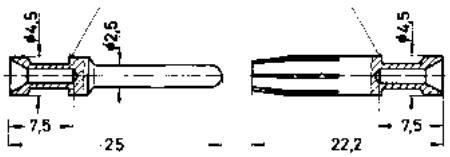 Conductor cross-section / Identification 0.14-0.37 mm² AWG 26-22 — no groove 0.5 mm² AWG 20 — no groove 0.75 mm² AWG 18 — 1 groove* 1 mm² AWG 18 — 1 groove 1.5 mm² AWG 16 — 2 grooves 2.5 mm² AWG 14 — 3 grooves 3 mm² AWG 12 — wide groove 4 mm² AWG 12 — no groove * on the back crimp collar Stripping length 7.5 mm

Features

- Han-Quick Lock® or crimp termination available
- High packing density

Technical characteristics

Number of contacts	8
Electrical data acc. to IEC 61984	16 A 400 V 6 kV 3
Rated current	16 A
Rated voltage	400 V
Rated impulse voltage	6 kV
Pollution degree	3
Rated voltage acc. to UL	600 V
Insulation resistance	≥10^{10} Ω
Contact resistance	≤1 mΩ
Limiting temperature	-40 ... +125 °C
Mating cycles	≥500
Mating cycles with other HMC components	≥10000
Material (insert)	Polycarbonate
Colour (insert)	RAL 7032 (pebble grey)
Material (contacts)	Copper alloy
Material flammability class acc. to UL 94	V-0
RoHS	compliant with exemption, compliant
RoHS exemptions	**6c:** Copper alloy containing up to 4 % lead by weight

Derating

Current carrying capacity

The current carrying capacity of the connectors is limited by the thermal load capability of the contact element material including the connections and the insulating parts. The derating curve is therefore valid for currents which flow constantly (non-intermittent) through each contact element of the connector evenly, without exceeding the allowed maximum temperature.

Measuring and testing techniques acc. to IEC 60512-5-2

Han-Quick Lock® termination

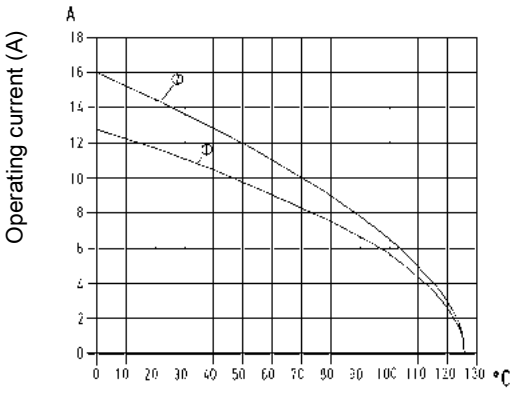

Ambient temperature (°C)

① 24 B hoods/housings with 6 modules Conductor cross-section 1.5 mm²
② 24 B hoods/housings with 6 modules Conductor cross-section 2.5 mm²

Derating

Crimp termination

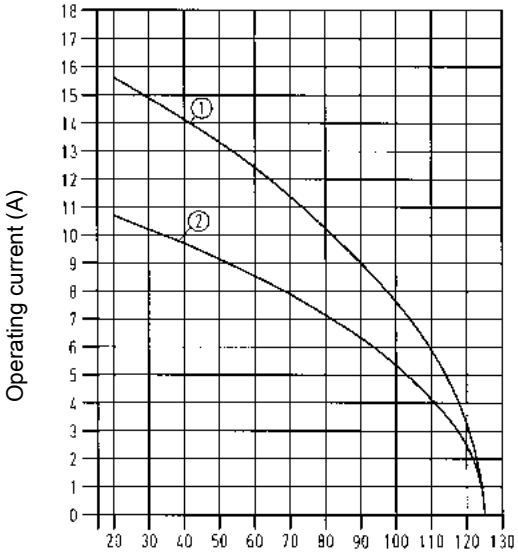

Ambient temperature (°C)

① 24 B hoods/housings with 6 modules Conductor cross-section 2.5 mm²
② 24 B hoods/housings with 6 modules Conductor cross-section 1.5 mm²

Specifications and approvals

EN 60664-1
IEC 61984
UL 1977 ECBT2.E235076
UL 2237 PVVA2.E318390
CSA-C22.2 No. 182.3 PVVA8.E318390
DNV GL

Details

Crimping tools see chapter 90

Remarks on the crimp technique

The wire gauges mentioned in the catalogue refer to geometric wire gauges of cables.

Number of contacts

8

16 A 400 V 6 kV 3

Identification	Conductor cross-section (mm²)	Part number Male	Part number Female	Drawing (dimensions in mm)
Han-Modular® , Han® EE module, Han-Quick Lock® termination, Contact surface: Silver plated 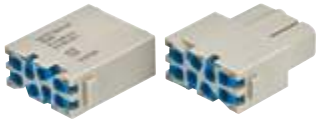 Blue slide	0,5 ... 2,5	09 14 008 2633	09 14 008 2733	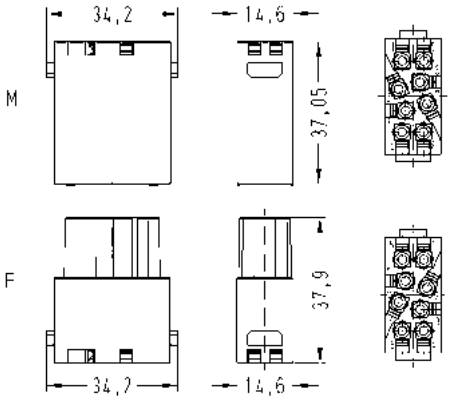 Contact arrangement (view from termination side) Stripping length 10 mm
Han-Modular® , Han® EE module, Han-Quick Lock® termination, Contact surface: Silver plated  Black slide	0,25 ... 1,5	09 14 008 2634	09 14 008 2734	

Identification	Conductor cross-section (mm²)	Part number Male	Part number Female	Drawing (dimensions in mm)
Han-Modular® , Han® EE module, Crimp termination 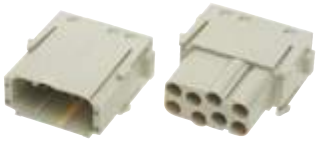 Please order crimp contacts separately.	0,14 ... 4	09 14 008 3001	09 14 008 3101	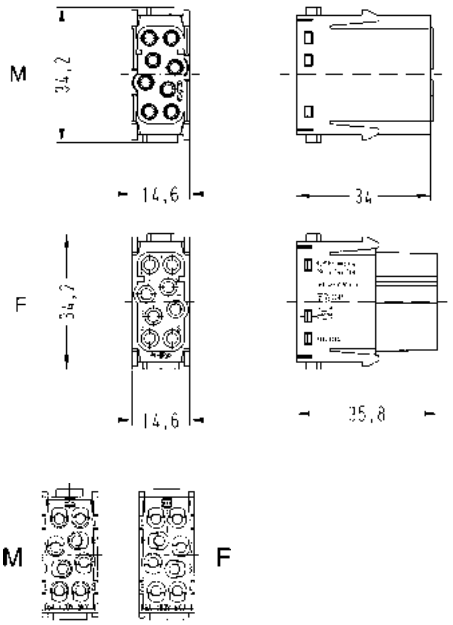 Contact arrangement (view from termination side) Stripping length 7.5 mm
Han E® , Crimp contact, Contact surface: Silver plated 	0,14 ... 0,37 0,5 0,75 1 1,5 2,5 3 4	09 33 000 6127 09 33 000 6121 09 33 000 6114 09 33 000 6105 09 33 000 6104 09 33 000 6102 09 33 000 6106 09 33 000 6107	09 33 000 6227 09 33 000 6220 09 33 000 6214 09 33 000 6205 09 33 000 6204 09 33 000 6202 09 33 000 6206 09 33 000 6207	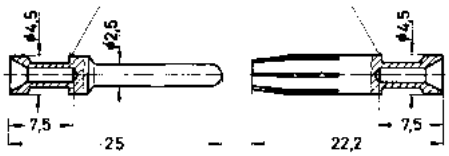 Conductor cross-section / Identification 0.14-0.37 mm² AWG 26-22 — no groove 0.5 mm² AWG 20 — no groove 0.75 mm² AWG 18 — 1 groove* 1 mm² AWG 18 — 1 groove 1.5 mm² AWG 16 — 2 grooves 2.5 mm² AWG 14 — 3 grooves 3 mm² AWG 12 — wide groove 4 mm² AWG 12 — no groove * on the back crimp collar Stripping length 7.5 mm
Han E® , Crimp contact, Contact surface: Gold plated 	0,14 ... 0,37 0,5 0,75 1 1,5 2,5 4	09 33 000 6117 09 33 000 6122 09 33 000 6115 09 33 000 6118 09 33 000 6116 09 33 000 6123 09 33 000 6119	09 33 000 6217 09 33 000 6222 09 33 000 6215 09 33 000 6218 09 33 000 6216 09 33 000 6223 09 33 000 6221	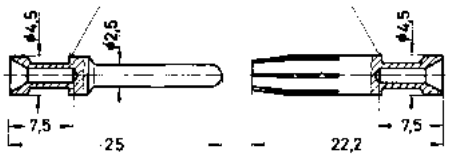 Conductor cross-section / Identification 0.14-0.37 mm² AWG 26-22 — no groove 0.5 mm² AWG 20 — no groove 0.75 mm² AWG 18 — 1 groove* 1 mm² AWG 18 — 1 groove 1.5 mm² AWG 16 — 2 grooves 2.5 mm² AWG 14 — 3 grooves 3 mm² AWG 12 — wide groove 4 mm² AWG 12 — no groove * on the back crimp collar Stripping length 7.5 mm

Features

- Suitable for Han E® crimp contacts
- Higher density of crimping contacts
- Standard module for power up to 16 A
- Also suitable as a reliable signal connector

Technical characteristics

Number of contacts	20
Electrical data acc. to IEC 61984	16 A 500 V 6 kV 3
Rated current	16 A
Rated voltage	500 V
Rated impulse voltage	6 kV
Pollution degree	3
Rated voltage acc. to UL	600 V
Insulation resistance	≥10^{10} Ω
Contact resistance	≤1 mΩ
Limiting temperature	-40 ... +125 °C
Mating cycles	≥500
Mating cycles with other HMC components	≥10000
Material (insert)	Polycarbonate
Colour (insert)	RAL 7032 (pebble grey)
Material (contacts)	Copper alloy
Material flammability class acc. to UL 94	V-0
RoHS	compliant, compliant with exemption
RoHS exemptions	**6c:** Copper alloy containing up to 4 % lead by weight

Derating

Current carrying capacity

The current carrying capacity of the connectors is limited by the thermal load capability of the contact element material including the connections and the insulating parts. The derating curve is therefore valid for currents which flow constantly (non-intermittent) through each contact element of the connector evenly, without exceeding the allowed maximum temperature.

Measuring and testing techniques acc. to IEC 60512-5-2

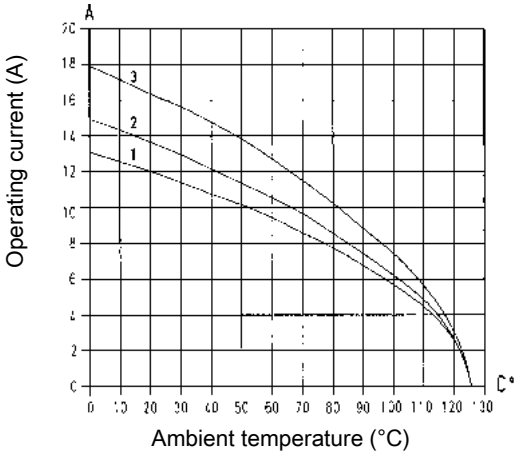

① 24 B hoods/housings with 3 modules Conductor cross-section 1.5 mm²
② 24 B hoods/housings with 3 modules Conductor cross-section 2.5 mm²
③ 24 B hoods/housings with 3 modules Conductor cross-section 4 mm²

Specifications and approvals

EN 60664-1
IEC 61984
UL 1977 ECBT2.E235076
DNV GL
UL 2237 PVVA2.E318390
CSA-C22.2 No. 182.3 PVVA8.E318390

Details

Crimping tools see chapter 90

Remarks on the crimp technique

The wire gauges mentioned in the catalogue refer to geometric wire gauges of cables.

Number of contacts

20

16 A 500 V 6 kV 3

Identification	Conductor cross-section (mm²)	Part number Male	Part number Female	Drawing (dimensions in mm)
Han-Modular® , Han® EEE module, Crimp termination  Please order crimp contacts separately.	0,14 ... 4	09 14 020 3001	09 14 020 3101	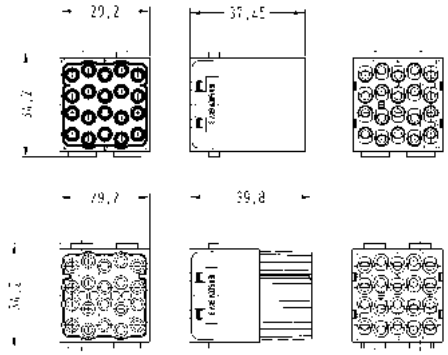 Contact arrangement (view from termination side)
Han E® , Crimp contact, Contact surface: Silver plated 	0,14 ... 0,37 0,5 0,75 1 1,5 2,5 3 4	09 33 000 6127 09 33 000 6121 09 33 000 6114 09 33 000 6105 09 33 000 6104 09 33 000 6102 09 33 000 6106 09 33 000 6107	09 33 000 6227 09 33 000 6220 09 33 000 6214 09 33 000 6205 09 33 000 6204 09 33 000 6202 09 33 000 6206 09 33 000 6207	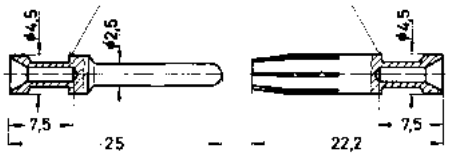 Stripping length 7.5 mm

Conductor cross-section		Identification
0.14-0.37 mm²	AWG 26-22	no groove
0.5 mm²	AWG 20	no groove
0.75 mm²	AWG 18	1 groove*
1 mm²	AWG 18	1 groove
1.5 mm²	AWG 16	2 grooves
2.5 mm²	AWG 14	3 grooves
3 mm²	AWG 12	wide groove
4 mm²	AWG 12	no groove
* on the back crimp collar		

Identification	Conductor cross-section (mm²)	Part number Male	Part number Female	Drawing (dimensions in mm)
Han E® , Crimp contact, Contact surface: Gold plated 	0,14 ... 0,37 0,5 0,75 1 1,5 2,5 4	09 33 000 6117 09 33 000 6122 09 33 000 6115 09 33 000 6118 09 33 000 6116 09 33 000 6123 09 33 000 6119	09 33 000 6217 09 33 000 6222 09 33 000 6215 09 33 000 6218 09 33 000 6216 09 33 000 6223 09 33 000 6221	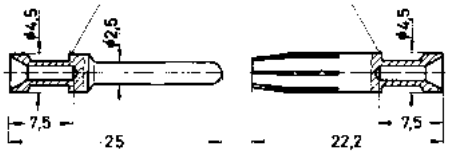

Conductor cross-section		Identification
0.14-0.37 mm²	AWG 26-22	no groove
0.5 mm²	AWG 20	no groove
0.75 mm²	AWG 18	1 groove*
1 mm²	AWG 18	1 groove
1.5 mm²	AWG 16	2 grooves
2.5 mm²	AWG 14	3 grooves
3 mm²	AWG 12	wide groove
4 mm²	AWG 12	no groove
* on the back crimp collar		

Stripping length 7.5 mm

Features

- Reliable cage clamp termination
- No special tools required

Technical characteristics

Number of contacts	5
Electrical data acc. to IEC 61984	16 A 400 V 6 kV 3
Rated current	16 A
Rated voltage	400 V
Rated impulse voltage	6 kV
Pollution degree	3
Rated voltage acc. to UL	600 V
Insulation resistance	≥10^{10} Ω
Contact resistance	≤3 mΩ
Limiting temperature	-40 ... +125 °C
Mating cycles	≥500
Material (insert)	Polycarbonate
Colour (insert)	RAL 7032 (pebble grey)
Material (contacts)	Copper alloy
Material flammability class acc. to UL 94	V-0
RoHS	compliant with exemption, compliant
RoHS exemptions	**6c:** Copper alloy containing up to 4 % lead by weight

Derating

Current carrying capacity

The current carrying capacity of the connectors is limited by the thermal load capability of the contact element material including the connections and the insulating parts. The derating curve is therefore valid for currents which flow constantly (non-intermittent) through each contact element of the connector evenly, without exceeding the allowed maximum temperature.

Measuring and testing techniques acc. to IEC 60512-5-2

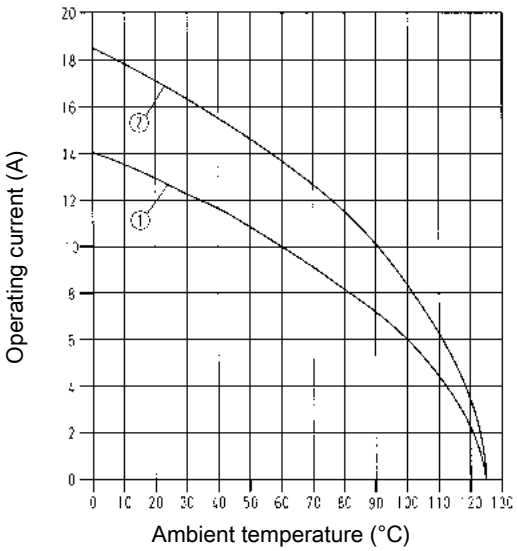

① 24 B hoods/housings with 6 modules Conductor cross-section 1.5 mm²
② 24 B hoods/housings with 6 modules Conductor cross-section 2.5 mm²

Specifications and approvals

EN 60664-1
IEC 61984
UL 1977 ECBT2.E235076
UL 2237 PVVA2.E318390
CSA-C22.2 No. 182.3 PVVA8.E318390
DNV GL

Han® ES module

Number of contacts

5

16 A 400 V 6 kV 3

Identification	Conductor cross-section (mm²)	Part number Male	Part number Female	Drawing (dimensions in mm)
Han-Modular® , Han® ES module, Cage-clamp termination, Contact surface: Silver plated 	0,14 ... 2,5	09 14 005 2616	09 14 005 2716	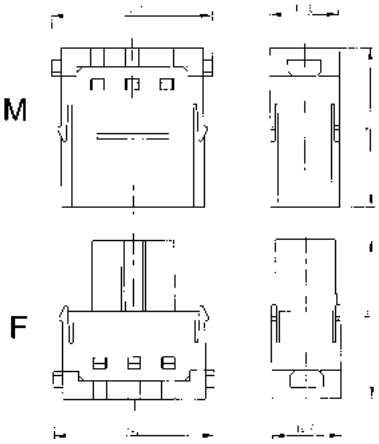
Han-Modular® , Han® ES module, Cage-clamp termination, Contact surface: Gold plated	0,14 ... 2,5	09 14 005 2617	09 14 005 2717	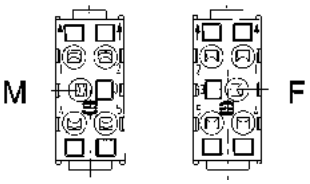 Contact arrangement (view from termination side)

Features

- Available in two versions: for Han® C or Han E® crimp contacts
- 2 contacts up to 5000 V
- Insulator out of a voltage resistant teflon material
- Combination with all other modules (pneumatic, signal etc.)

Technical characteristics

Number of contacts	2
Electrical data acc. to IEC 61984	40 A 2.900/5.000 V 15 kV 3, 16 A 2.900/5.000 V 15 kV 3
Rated current	40 A, 16 A
Rated voltage conductor-earth	2900 V
Rated voltage conductor-conductor	5000 V
Rated impulse voltage	15 kV
Pollution degree	3
Rated current acc. to UL	31 A, 16 A
Rated voltage acc. to UL	5000 V
Insulation resistance	≥10^{10} Ω
Contact resistance	≤1 mΩ
Limiting temperature	-40 ... +125 °C
Mating cycles	≥500
Material (insert)	Polycarbonate / Teflon (PTFE)
Colour (insert)	RAL 7032 (pebble grey)
Material (contacts)	Copper alloy
Material flammability class acc. to UL 94	V-0
RoHS	compliant, compliant with exemption
RoHS exemptions	**6c:** Copper alloy containing up to 4 % lead by weight

Derating

Current carrying capacity

The current carrying capacity of the connectors is limited by the thermal load capability of the contact element material including the connections and the insulating parts. The derating curve is therefore valid for currents which flow constantly (non-intermittent) through each contact element of the connector evenly, without exceeding the allowed maximum temperature.

Measuring and testing techniques acc. to IEC 60512-5-2

Han® C crimp contacts

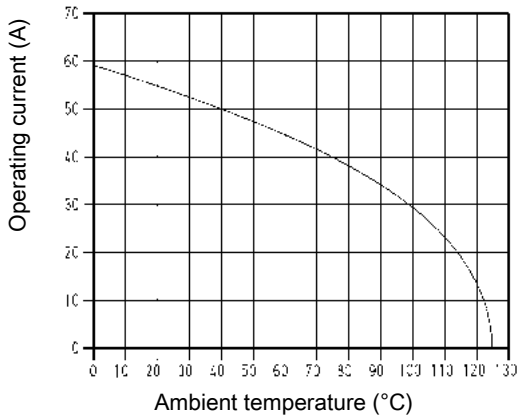

① 24 B hoods/housings with 3 modules Conductor cross-section 6 mm²

Derating

Han E® crimp contacts

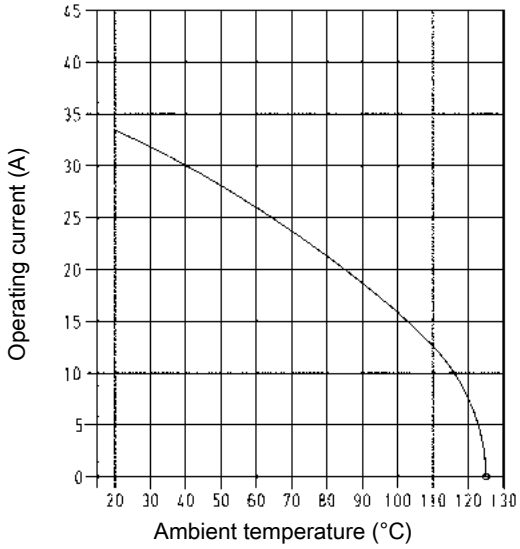

① Housing Han® 16 B with 1 Han® HV module Conductor cross-section 2.5 mm²

Specifications and approvals

EN 60664-1
IEC 61984
EN 50124-1
IEC 60352-4
UL 1977 ECBT2.E235076
CSA-C22.2 No. 182.3 ECBT8.E235076
DNV GL

Details

Crimping tools see chapter 90

Remarks on the crimp technique

The wire gauges mentioned in the catalogue refer to geometric wire gauges of cables.

Han® HV module

Number of contacts

2

40 A 2.900/5.000 V 15 kV 3

Identification	Conductor cross-section (mm²)	Part number Male	Part number Female	Drawing (dimensions in mm)
Han-Modular® , Han® HV module, for Han® C crimp contacts, Crimp termination, Pack contents: 1 module, 2 locking sleeves, 2 heat shrink tubes  Please order crimp contacts separately.	1,5 ... 10	09 14 002 3023	09 14 002 3123	M 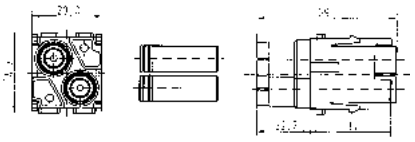 F 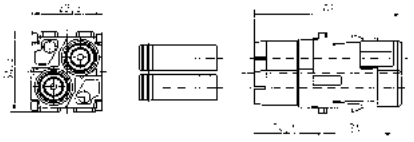 Assembly instructions  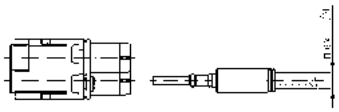 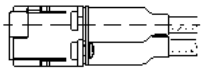 ATTENTION! Stripping length 13 mm Crimp with tool 09 99 000 0888, 09 99 000 0110 or 09 99 000 0377 Snap crimped cable in the insert. Shrink the heat shrink tube over the rear of contact.
Han® C , Crimp contact, Contact surface: Silver plated 	1,5 2,5 4 6 10	09 32 000 6104 09 32 000 6105 09 32 000 6107 09 32 000 6108 09 32 000 6109	09 32 000 6204 09 32 000 6205 09 32 000 6207 09 32 000 6208 09 32 000 6209	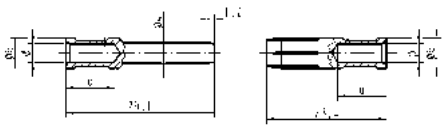 Conductor cross-section / Ø / Stripping length 1.5 mm² AWG 16 — 1.75 mm — 9.5 mm 2.5 mm² AWG 14 — 2.25 mm — 9.5 mm 4 mm² AWG 12 — 2.85 mm — 9.5 mm 6 mm² AWG 10 — 3.5 mm — 9.5 mm 10 mm² AWG 8 — 4.3 mm — 12 mm

Han® HV module

Number of contacts

2

16 A 2.900/5.000 V 15 kV 3

Identification	Conductor cross-section (mm²)	Part number Male	Part number Female	Drawing (dimensions in mm)
Han-Modular® , Han® HV module, for Han E® crimp contacts, Crimp termination, Pack contents: 1 module, 2 locking sleeves, 2 heat shrink tubes  Please order crimp contacts separately.	0,5 ... 4	09 14 002 3021	09 14 002 3121	M 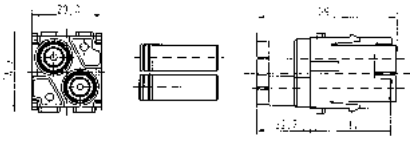 F 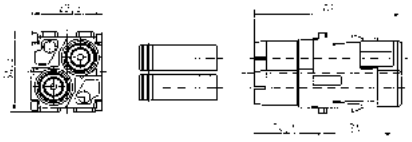 Assembly instructions 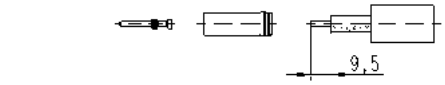 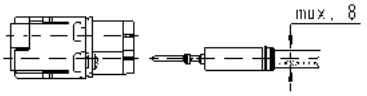 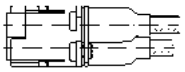 ATTENTION! Stripping length 9.5 mm Crimp with crimping tool 09 99 000 0888 Snap crimped cable in the insert. Shrink the heat shrink tube over the rear of contact.
Han E® , Crimp contact, Contact surface: Silver plated 	0,5 0,75 1 1,5 2,5 3 4	09 33 000 6121 09 33 000 6114 09 33 000 6105 09 33 000 6104 09 33 000 6102 09 33 000 6106 09 33 000 6107	09 33 000 6220 09 33 000 6214 09 33 000 6205 09 33 000 6204 09 33 000 6202 09 33 000 6206 09 33 000 6207	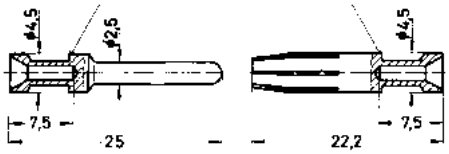 Conductor cross-section / Identification 0.14-0.37 mm² AWG 26-22 — no groove 0.5 mm² AWG 20 — no groove 0.75 mm² AWG 18 — 1 groove* 1 mm² AWG 18 — 1 groove 1.5 mm² AWG 16 — 2 grooves 2.5 mm² AWG 14 — 3 grooves 3 mm² AWG 12 — wide groove 4 mm² AWG 12 — no groove * on the back crimp collar Stripping length 7.5 mm

Features

- Suitable for Han E® crimp contacts
- 2 contacts up to 2500 V
- Insulator out of a voltage resistant teflon material
- Combination with all other modules (pneumatic, signal etc.)

Technical characteristics

Number of contacts	2
Electrical data acc. to IEC 61984	16 A 2.500 V 15 kV 3
Rated current	16 A
Rated voltage	2500 V
Rated impulse voltage	15 kV
Pollution degree	3
Insulation resistance	≥10^{10} Ω
Contact resistance	≤1 mΩ
Limiting temperature	-40 ... +125 °C
Mating cycles	≥500
Material (insert)	Polycarbonate / Teflon (PTFE)
Colour (insert)	RAL 7032 (pebble grey)
Material (contacts)	Copper alloy
Material flammability class acc. to UL 94	V-0
RoHS	compliant, compliant with exemption
RoHS exemptions	**6c:** Copper alloy containing up to 4 % lead by weight

Derating

Current carrying capacity

The current carrying capacity of the connectors is limited by the thermal load capability of the contact element material including the connections and the insulating parts. The derating curve is therefore valid for currents which flow constantly (non-intermittent) through each contact element of the connector evenly, without exceeding the allowed maximum temperature.

Measuring and testing techniques acc. to IEC 60512-5-2

Han E® crimp contacts

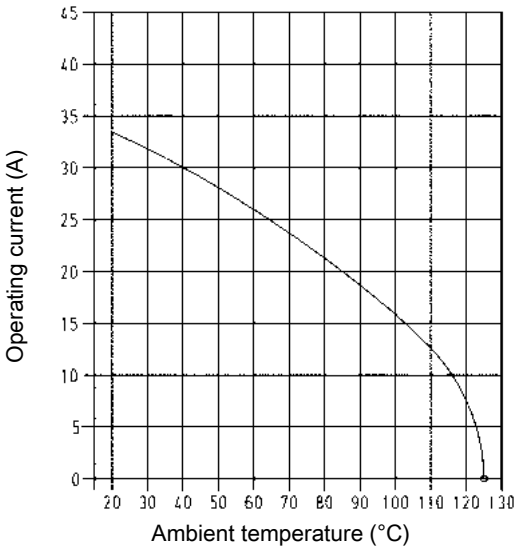

① Housing Han® 16 B with 1 Han® HV module Conductor cross-section 2.5 mm²

Specifications and approvals

EN 60664-1
IEC 61984
EN 50124-1
DNV GL

Details

Crimping tools see chapter 90

Remarks on the crimp technique

The wire gauges mentioned in the catalogue refer to geometric wire gauges of cables.

Han® HV Single module

Number of contacts

2

16 A 2.500 V 15 kV 3

Identification	Conductor cross-section (mm²)	Part number Male	Part number Female	Drawing (dimensions in mm)
Han-Modular® , Han® HV module, Single module, Crimp termination, Pack contents: 1 module, 2 locking sleeves, 2 heat shrink tubes  Please order crimp contacts separately.	0,5 ... 4	09 14 002 3025	09 14 002 3125	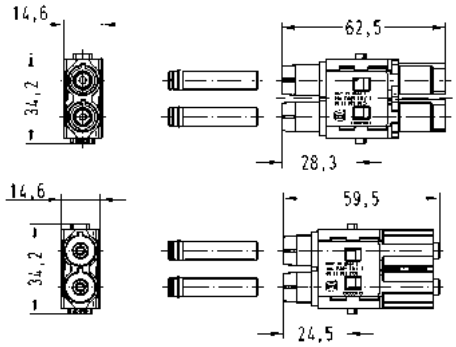 Assembly instructions 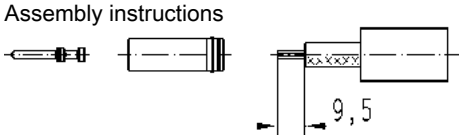 ATTENTION! Stripping length 9.5 mm Crimp with crimping tool 09 99 000 0888 Snap crimped cable in the insert. Shrink the heat shrink tube over the rear of contact.
Han E® , Crimp contact, Contact surface: Silver plated 	0,5 0,75 1 1,5 2,5 3 4	09 33 000 6121 09 33 000 6114 09 33 000 6105 09 33 000 6104 09 33 000 6102 09 33 000 6106 09 33 000 6107	09 33 000 6220 09 33 000 6214 09 33 000 6205 09 33 000 6204 09 33 000 6202 09 33 000 6206 09 33 000 6207	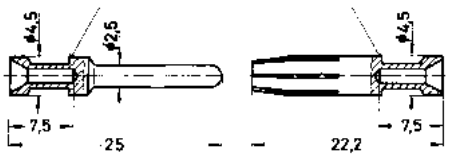

Conductor cross-section		Identification
0.14-0.37 mm²	AWG 26-22	no groove
0.5 mm²	AWG 20	no groove
0.75 mm²	AWG 18	1 groove*
1 mm²	AWG 18	1 groove
1.5 mm²	AWG 16	2 grooves
2.5 mm²	AWG 14	3 grooves
3 mm²	AWG 12	wide groove
4 mm²	AWG 12	no groove
* on the back crimp collar		

Stripping length 7.5 mm

Features

- Han-Quick Lock® or crimp termination available
- Standard module for signal up to 10 A

Technical characteristics

Number of contacts	12
Electrical data acc. to IEC 61984	10 A 250 V 4 kV 3
Rated current	10 A
Rated voltage	250 V
Rated impulse voltage	4 kV
Pollution degree	3
Rated voltage acc. to UL	600 V
Insulation resistance	≥10^{10} Ω
Contact resistance	≤3 mΩ
Limiting temperature	-40 ... +125 °C
Mating cycles	≥500
Mating cycles with other HMC components	≥10000
Material (insert)	Polycarbonate
Colour (insert)	RAL 7032 (pebble grey)
Material (contacts)	Copper alloy
Material flammability class acc. to UL 94	V-0
RoHS	compliant with exemption, compliant
RoHS exemptions	**6c:** Copper alloy containing up to 4 % lead by weight

Derating

Current carrying capacity

The current carrying capacity of the connectors is limited by the thermal load capability of the contact element material including the connections and the insulating parts. The derating curve is therefore valid for currents which flow constantly (non-intermittent) through each contact element of the connector evenly, without exceeding the allowed maximum temperature.

Measuring and testing techniques acc. to IEC 60512-5-2

Han-Quick Lock® termination

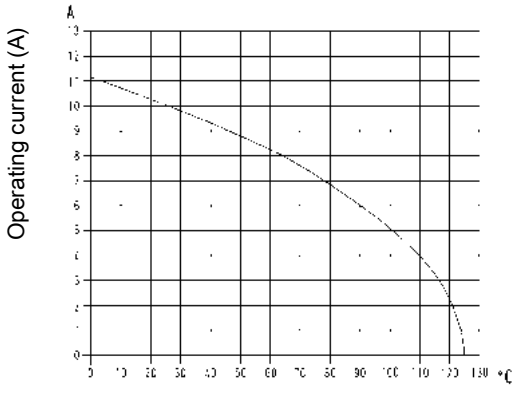

Ambient temperature (°C)

① 24 B hoods/housings with 6 modules Conductor cross-section 1.5 mm²

Derating

Crimp termination

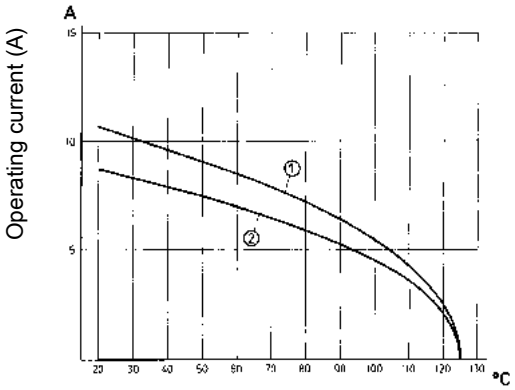

Ambient temperature (°C)

① 24 B hoods/housings with 6 modules Conductor cross-section 1.5 mm²
② 24 B hoods/housings with 6 modules Conductor cross-section 1 mm²

Specifications and approvals

EN 60664-1
IEC 61984
UL 1977 ECBT2.E235076
CSA-C22.2 No. 182.3 ECBT8.E235076
DNV GL

Details

Crimping tools see chapter 90

Remarks on the crimp technique

The wire gauges mentioned in the catalogue refer to geometric wire gauges of cables.

Han DD® module

Number of contacts

12

10 A 250 V 4 kV 3



Identification	Conductor cross-section (mm²)	Part number Male	Part number Female	Drawing (dimensions in mm)
Han-Modular® , Han DD® module, Han-Quick Lock® termination, Contact surface: Silver plated 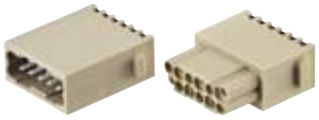 Black slide	0,25 ... 1,5	09 14 012 2632	09 14 012 2732	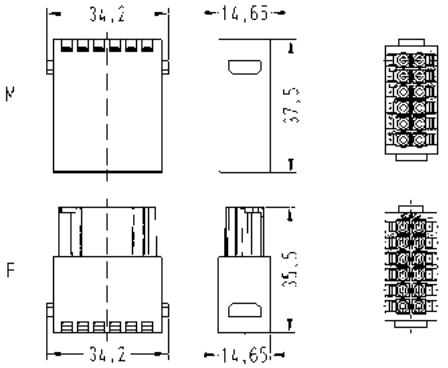 Contact arrangement (view from termination side) Stripping length 10 mm
Han-Modular® , Han DD® module, Han-Quick Lock® termination, Contact surface: Gold plated Black slide	0,25 ... 1,5	09 14 012 2634	09 14 012 2734	
Han-Modular® , Han DD® module, Crimp termination 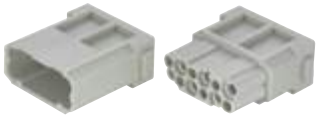 Please order crimp contacts separately.	0,14 ... 2,5	09 14 012 3002	09 14 012 3102	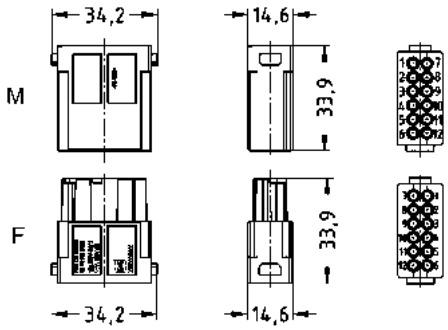 Contact arrangement (view from termination side)

Han DD® module

Identification	Conductor cross-section (mm²)	Part number Male	Part number Female	Drawing (dimensions in mm)
Han D® , Crimp contact, Contact surface: Silver plated 	0,14 ... 0,37 0,5 0,75 1 1,5 2,5	09 15 000 6104 09 15 000 6103 09 15 000 6105 09 15 000 6102 09 15 000 6101 09 15 000 6106	09 15 000 6204 09 15 000 6203 09 15 000 6205 09 15 000 6202 09 15 000 6201 09 15 000 6206	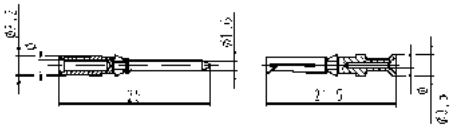

Wire gauge		⌀	Stripping length
0.14-0.37 mm²	AWG 26-22	0.9 mm	8 mm
0.5 mm²	AWG 20	1.1 mm	8 mm
0.75 mm²	AWG 18	1.3 mm	8 mm
1 mm²	AWG 18	1.45 mm	8 mm
1.5 mm²	AWG 16	1.75 mm	8 mm
2.5 mm²	AWG 14	2.25 mm	6 mm

Han D® , Crimp contact, Contact surface: Gold plated 	0,14 ... 0,37 0,5 0,75 1 1,5 2,5	09 15 000 6124 09 15 000 6123 09 15 000 6125 09 15 000 6122 09 15 000 6121 09 15 000 6126	09 15 000 6224 09 15 000 6223 09 15 000 6225 09 15 000 6222 09 15 000 6221 09 15 000 6226	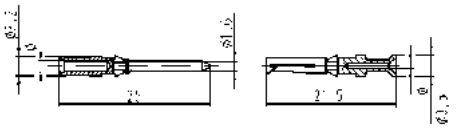

Wire gauge		⌀	Stripping length
0.14-0.37 mm²	AWG 26-22	0.9 mm	8 mm
0.5 mm²	AWG 20	1.1 mm	8 mm
0.75 mm²	AWG 18	1.3 mm	8 mm
1 mm²	AWG 18	1.45 mm	8 mm
1.5 mm²	AWG 16	1.75 mm	8 mm
2.5 mm²	AWG 14	2.25 mm	6 mm

FO contact, for 1 mm plastic fibre 		20 10 001 3211	20 10 001 3221	 20 10 001 3211 + 20 10 001 3221

Technical characteristics

Number of contacts	42
Electrical data acc. to IEC 61984	10 A 150 V 2,5 kV 3
Rated current	10 A
Rated voltage	150 V
Rated impulse voltage	2.5 kV
Pollution degree	3
Rated voltage acc. to UL	250 V
Insulation resistance	≥10^{10} Ω
Contact resistance	≤3 mΩ
Limiting temperature	-40 ... +125 °C
Mating cycles	≥500
Material (insert)	LCP
Material (contacts)	Copper alloy
Material flammability class acc. to UL 94	V-0
RoHS	compliant, compliant with exemption
RoHS exemptions	**6c:** Copper alloy containing up to 4 % lead by weight

Derating

Current carrying capacity

The current carrying capacity of the connectors is limited by the thermal load capability of the contact element material including the connections and the insulating parts. The derating curve is therefore valid for currents which flow constantly (non-intermittent) through each contact element of the connector evenly, without exceeding the allowed maximum temperature.

Measuring and testing techniques acc. to IEC 60512-5-2

Crimp termination

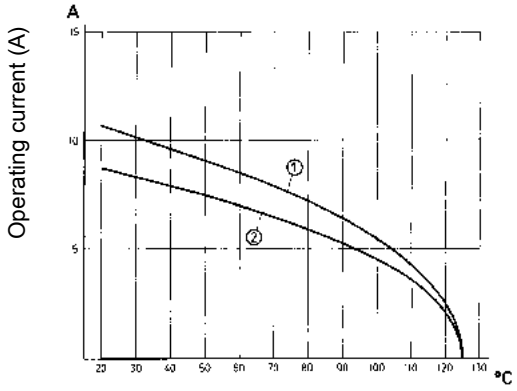

Ambient temperature (°C)

① 24 B hoods/housings with 6 modules Conductor cross-section 1.5 mm²
② 24 B hoods/housings with 6 modules Conductor cross-section 1 mm²

Specifications and approvals

UL 1977 ECBT2.E235076
EN 60664-1
IEC 61984

Details

Crimping tools see chapter 90

Remarks on the crimp technique

The wire gauges mentioned in the catalogue refer to geometric wire gauges of cables.

Han DD® Quad module

Number of contacts

42

10 A 150 V 2,5 kV 3

Identification	Conductor cross-section (mm²)	Part number Male	Part number Female	Drawing (dimensions in mm)
Han-Modular® , Han DD® Quad module, Crimp termination  Please order crimp contacts separately.	0,14 ... 2,5	09 14 042 3001	09 14 042 3101	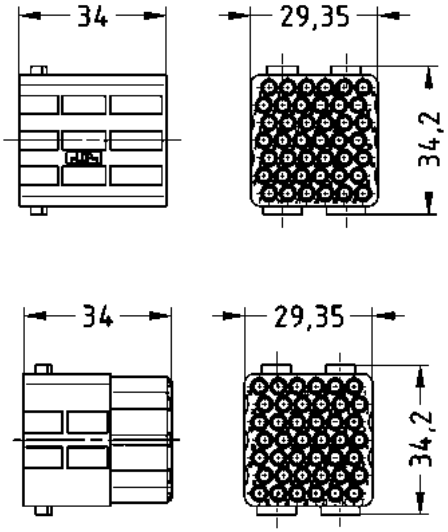
Han D® , Crimp contact, Contact surface: Silver plated 	0,14 ... 0,37 0,5 0,75 1 1,5 2,5	09 15 000 6104 09 15 000 6103 09 15 000 6105 09 15 000 6102 09 15 000 6101 09 15 000 6106	09 15 000 6204 09 15 000 6203 09 15 000 6205 09 15 000 6202 09 15 000 6201 09 15 000 6206	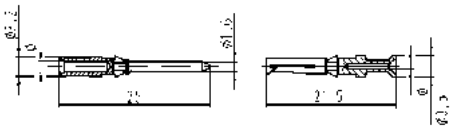 Wire gauge / ⌀ / Stripping length 0.14-0.37 mm² AWG 26-22 — 0.9 mm — 8 mm 0.5 mm² AWG 20 — 1.1 mm — 8 mm 0.75 mm² AWG 18 — 1.3 mm — 8 mm 1 mm² AWG 18 — 1.45 mm — 8 mm 1.5 mm² AWG 16 — 1.75 mm — 8 mm 2.5 mm² AWG 14 — 2.25 mm — 6 mm
Han D® , Crimp contact, Contact surface: Gold plated 	0,14 ... 0,37 0,5 0,75 1 1,5 2,5	09 15 000 6124 09 15 000 6123 09 15 000 6125 09 15 000 6122 09 15 000 6121 09 15 000 6126	09 15 000 6224 09 15 000 6223 09 15 000 6225 09 15 000 6222 09 15 000 6221 09 15 000 6226	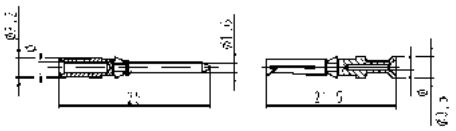 Wire gauge / ⌀ / Stripping length 0.14-0.37 mm² AWG 26-22 — 0.9 mm — 8 mm 0.5 mm² AWG 20 — 1.1 mm — 8 mm 0.75 mm² AWG 18 — 1.3 mm — 8 mm 1 mm² AWG 18 — 1.45 mm — 8 mm 1.5 mm² AWG 16 — 1.75 mm — 8 mm 2.5 mm² AWG 14 — 2.25 mm — 6 mm

Features

- Suitable for Han D® crimp contacts
- High packing density

Technical characteristics

Number of contacts	17
Electrical data acc. to IEC 61984	10 A 160 V 2,5 kV 3
Rated current	10 A
Rated voltage	160 V
Rated impulse voltage	2.5 kV
Pollution degree	3
Rated voltage acc. to UL	250 V
Insulation resistance	≥10^{10} Ω
Contact resistance	≤3 mΩ
Limiting temperature	-40 ... +125 °C
Mating cycles	≥500
Mating cycles with other HMC components	≥10000
Material (insert)	Polycarbonate
Colour (insert)	RAL 7032 (pebble grey)
Material (contacts)	Copper alloy
Material flammability class acc. to UL 94	V-0
RoHS	compliant, compliant with exemption
RoHS exemptions	**6c:** Copper alloy containing up to 4 % lead by weight

Derating

Current carrying capacity

The current carrying capacity of the connectors is limited by the thermal load capability of the contact element material including the connections and the insulating parts. The derating curve is therefore valid for currents which flow constantly (non-intermittent) through each contact element of the connector evenly, without exceeding the allowed maximum temperature.

Measuring and testing techniques acc. to IEC 60512-5-2

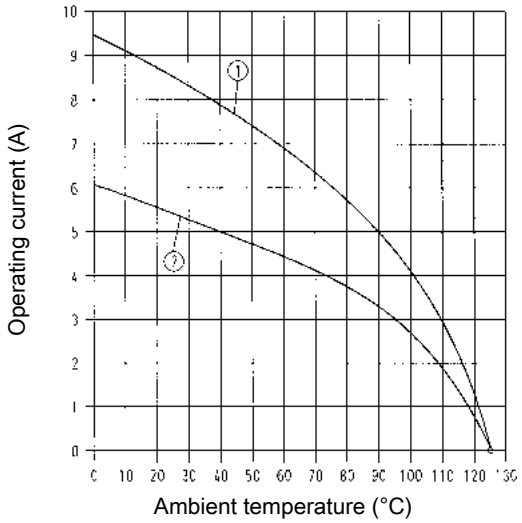

① 24 B hoods/housings with 6 modules Conductor cross-section 1.5 mm²
② 24 B hoods/housings with 6 modules Conductor cross-section 1 mm²

Specifications and approvals

EN 60664-1
IEC 61984
UL 1977 ECBT2.E235076
UL 2237 PVVA2.E318390
CSA-C22.2 No. 182.3 PVVA8.E318390
DNV GL

Details

Crimping tools see chapter 90

Remarks on the crimp technique

The wire gauges mentioned in the catalogue refer to geometric wire gauges of cables.

Han® DDD module

Number of contacts

17

10 A 160 V 2,5 kV 3

Identification	Conductor cross-section (mm²)	Part number Male	Part number Female	Drawing (dimensions in mm)
Han-Modular® , Han® DDD module, Crimp termination 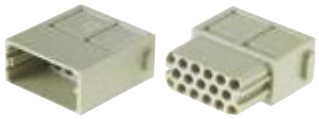 Please order crimp contacts separately.	0,14 ... 2,5	09 14 017 3001	09 14 017 3101	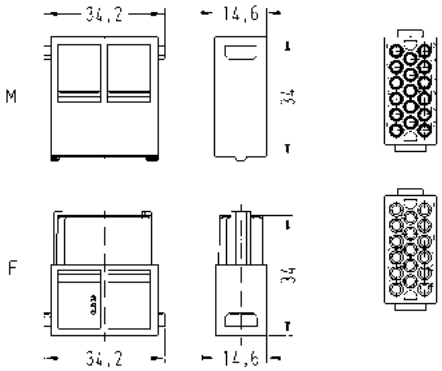 Contact arrangement (view from termination side)
Han D® , Crimp contact, Contact surface: Silver plated 	0,14 ... 0,37 0,5 0,75 1 1,5 2,5	09 15 000 6104 09 15 000 6103 09 15 000 6105 09 15 000 6102 09 15 000 6101 09 15 000 6106	09 15 000 6204 09 15 000 6203 09 15 000 6205 09 15 000 6202 09 15 000 6201 09 15 000 6206	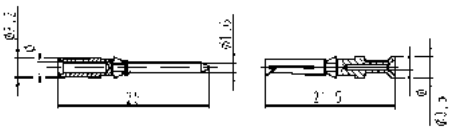 Wire gauge / ⌀ / Stripping length 0.14-0.37 mm² AWG 26-22 — 0.9 mm — 8 mm 0.5 mm² AWG 20 — 1.1 mm — 8 mm 0.75 mm² AWG 18 — 1.3 mm — 8 mm 1 mm² AWG 18 — 1.45 mm — 8 mm 1.5 mm² AWG 16 — 1.75 mm — 8 mm 2.5 mm² AWG 14 — 2.25 mm — 6 mm
Han D® , Crimp contact, Contact surface: Gold plated 	0,14 ... 0,37 0,5 0,75 1 1,5 2,5	09 15 000 6124 09 15 000 6123 09 15 000 6125 09 15 000 6122 09 15 000 6121 09 15 000 6126	09 15 000 6224 09 15 000 6223 09 15 000 6225 09 15 000 6222 09 15 000 6221 09 15 000 6226	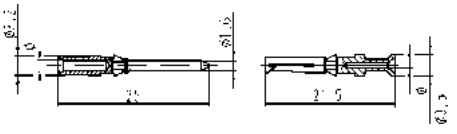 Wire gauge / ⌀ / Stripping length 0.14-0.37 mm² AWG 26-22 — 0.9 mm — 8 mm 0.5 mm² AWG 20 — 1.1 mm — 8 mm 0.75 mm² AWG 18 — 1.3 mm — 8 mm 1 mm² AWG 18 — 1.45 mm — 8 mm 1.5 mm² AWG 16 — 1.75 mm — 8 mm 2.5 mm² AWG 14 — 2.25 mm — 6 mm
FO contact, for 1 mm plastic fibre 		20 10 001 3211	20 10 001 3221	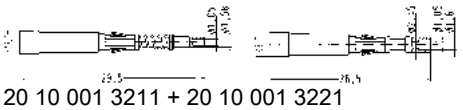 20 10 001 3211 + 20 10 001 3221

Features

- Suitable for standard D-Sub crimp contacts
- High packing density

Technical characteristics

Number of contacts	25
Electrical data acc. to IEC 61984	4 A 50 V 0,8 kV 3
Rated current	4 A
Rated voltage	50 V
Rated impulse voltage	0.8 kV
Pollution degree	3
Rated voltage acc. to UL	30 V
Insulation resistance	≥10^{10} Ω
Contact resistance	≤10 mΩ
Limiting temperature	-40 ... +125 °C
Mating cycles	≥500
Material (insert)	Polycarbonate
Colour (insert)	RAL 7032 (pebble grey)
Material (contacts)	Copper alloy
Material flammability class acc. to UL 94	V-0
RoHS	compliant, compliant with exemption
RoHS exemptions	**6c:** Copper alloy containing up to 4 % lead by weight

Derating

Current carrying capacity

The current carrying capacity of the connectors is limited by the thermal load capability of the contact element material including the connections and the insulating parts. The derating curve is therefore valid for currents which flow constantly (non-intermittent) through each contact element of the connector evenly, without exceeding the allowed maximum temperature.

Measuring and testing techniques acc. to IEC 60512-5-2

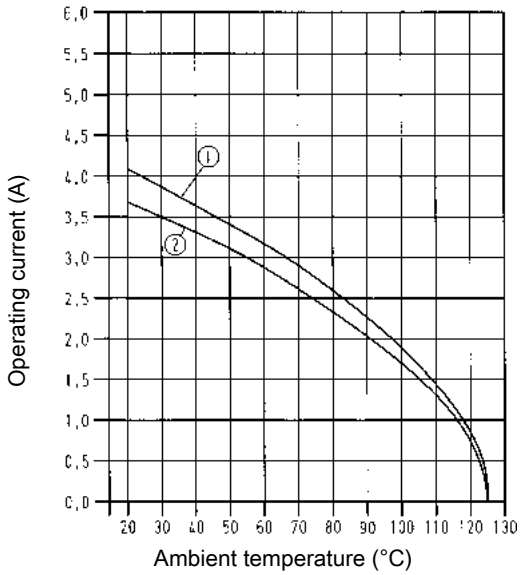

① 24 B hoods/housings with 6 modules; turned contacts Conductor cross-section 0.5 mm²
② 24 B hoods/housings with 6 modules; stamped contacts Conductor cross-section 0.5 mm²

Specifications and approvals

EN 60664-1
IEC 61984
UL 1977 ECBT2.E235076

Details

Guide pins and bushes are recommended (see chapter 80).

Han® High Density module

Number of contacts

25

4 A 50 V 0,8 kV 3

Identification	Conductor cross-section (mm²)	Part number Male	Part number Female	Drawing (dimensions in mm)
Han-Modular® , Han® High Density module, Crimp termination 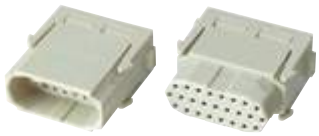 Please order crimp contacts separately.	0,09 ... 0,52	09 14 025 3001	09 14 025 3101	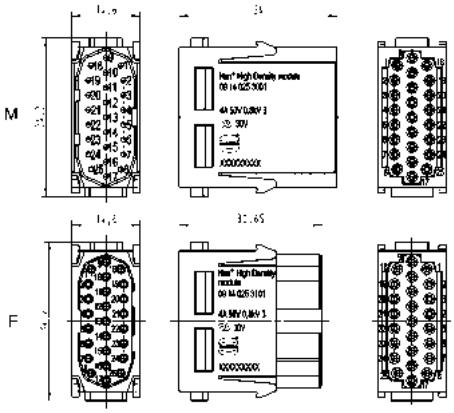 Contact arrangement (view from termination side)
D-Sub , Standard, Crimp contact, Turned , Pack contents: Single contact 	0,09 ... 0,25 0,13 ... 0,33 0,25 ... 0,52	09 67 000 7576 09 67 000 5576 09 67 000 8576	09 67 000 7476 09 67 000 5476 09 67 000 8476	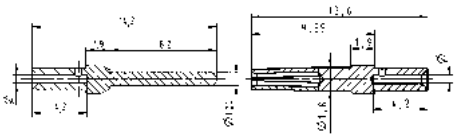 Wire gauge / ø / Stripping length 0.09-0.25 mm² / 0.64 mm / 4 mm 0.13-0.33 mm² / 0.88 mm / 4 mm 0.25-0.52 mm² / 1.13 mm / 4 mm 0.33-0.82 mm² / 1.34 mm / 4 mm for stranded wire according IEC 60228 Class 5

Han® Full High Density module

Features

- Suitable for standard D-Sub crimp contacts
- 44 % higher density

Technical characteristics

Number of contacts	36
Electrical data acc. to IEC 61984	4 A 32 V 0,8 kV 3
Rated current	4 A
Rated voltage	32 V
Rated impulse voltage	0.8 kV
Pollution degree	3
Insulation resistance	≥10^{10} Ω
Contact resistance	≤10 mΩ
Limiting temperature	-40 ... +125 °C
Mating cycles	≥500
Material (insert)	Polycarbonate
Colour (insert)	RAL 7032 (pebble grey)
Material (contacts)	Copper alloy
Material flammability class acc. to UL 94	V-0
RoHS	compliant with exemption
RoHS exemptions	**6c:** Copper alloy containing up to 4 % lead by weight

Specifications and approvals

EN 60664-1
IEC 61984

Han® Full High Density module

Number of contacts

36

4 A 32 V 0,8 kV 3

Identification	Conductor cross-section (mm²)	Part number Male	Part number Female	Drawing (dimensions in mm)
Han-Modular® , Han® Full High Density module, Crimp termination 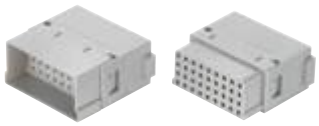 Please order crimp contacts separately.	0,09 ... 0,52	09 14 036 3001	09 14 036 3101	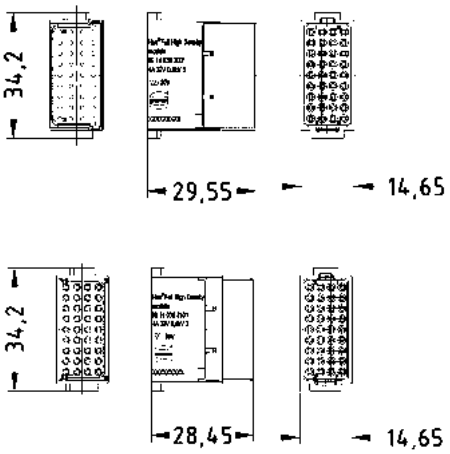
D-Sub , Standard, Crimp contact, Turned , Pack contents: Single contact 	0,09 ... 0,25 0,13 ... 0,33 0,25 ... 0,52	09 67 000 7576 09 67 000 5576 09 67 000 8576	09 67 000 7476 09 67 000 5476 09 67 000 8476	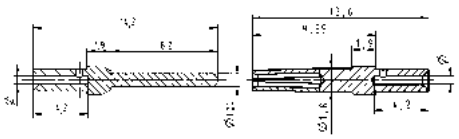 Wire gauge / ø / Stripping length 0.09-0.25 mm² / 0.64 mm / 4 mm 0.13-0.33 mm² / 0.88 mm / 4 mm 0.25-0.52 mm² / 1.13 mm / 4 mm 0.33-0.82 mm² / 1.34 mm / 4 mm for stranded wire according IEC 60228 Class 5

Han® D-Sub module

Features

- D-Sub 1 (9-pin) in the Han-Modular® system
- Suitable for the transmission of sensitive signals
- Compatible to crimp, solder or IDC termination

Technical characteristics

Number of contacts	9
Electrical data acc. to IEC 61984	5 A 50 V 0,8 kV 3
Rated current	5 A
Rated voltage	50 V
Rated impulse voltage	0.8 kV
Pollution degree	3
Rated voltage acc. to UL	30 V
Insulation resistance	≥10^{10} Ω
Contact resistance	≤10 mΩ
Limiting temperature	-40 ... +125 °C
Mating cycles	≥500
Material (insert)	Polycarbonate, Zinc die-cast
Colour (insert)	RAL 7032 (pebble grey)
Material (contacts)	Copper alloy
Material flammability class acc. to UL 94	V-0
RoHS	compliant, compliant with exemption
RoHS exemptions	**6c:** Copper alloy containing up to 4 % lead by weight

Specifications and approvals

EN 60664-1
IEC 61984
UL 1977 ECBT2.E235076
DNV GL

Details

Guide pins and bushes are recommended (see chapter 80).

Han® D-Sub module

Number of contacts

9

5 A 50 V 0,8 kV 3

Identification	Conductor cross-section (mm²)	Part number Male	Part number Female	Drawing (dimensions in mm)
Han-Modular® , Han® D-Sub module, Crimp termination 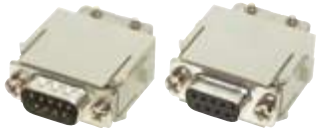 Please order crimp contacts separately.	0,08 ... 0,52	09 14 009 3001	09 14 009 3101	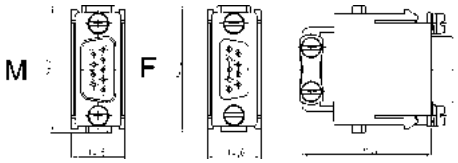
Han-Modular® , Han® D-Sub module, Screw termination  for RS 485-based bus systems with T-functionality	0,08 ... 0,52		09 14 009 3151	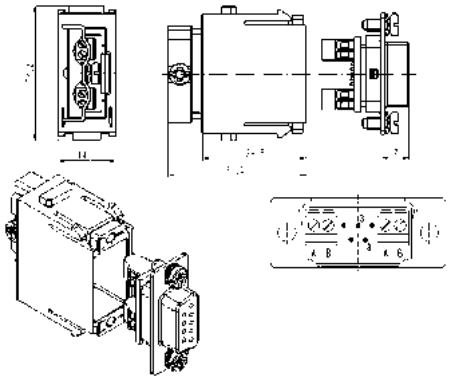 Contact arrangement (view from termination side) Signal A: Contact no. 8 Signal B: Contact no. 3
Han-Modular® , Adapter module, for D-Sub 1 (9-pin) 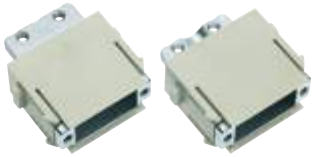 for one cable		09 14 000 9930	09 14 000 9931	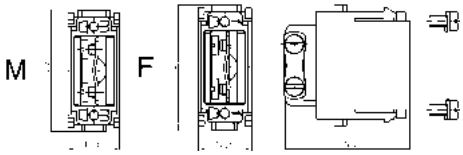
Han-Modular® , Adapter module, for D-Sub 1 (9-pin) 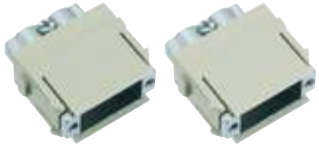 for two cables		09 14 000 9932	09 14 000 9933	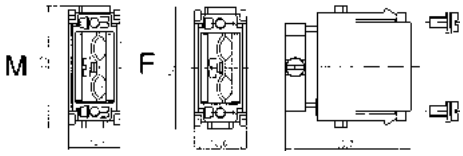

Han® D-Sub module

Identification	Conductor cross-section (mm²)	Part number Male	Part number Female	Drawing (dimensions in mm)
D-Sub , Standard, Crimp contact, Turned , Pack contents: Single contact	0,09 ... 0,25 0,13 ... 0,33 0,25 ... 0,52	09 67 000 7576 09 67 000 5576 09 67 000 8576	09 67 000 7476 09 67 000 5476 09 67 000 8476	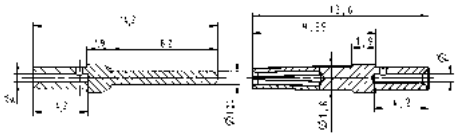

Wire gauge	ø	Stripping length
0.09-0.25 mm²	0.64 mm	4 mm
0.13-0.33 mm²	0.88 mm	4 mm
0.25-0.52 mm²	1.13 mm	4 mm
0.33-0.82 mm²	1.34 mm	4 mm

for stranded wire according IEC 60228 Class 5

Han® USB module

Features

- According to USB 2.0 / USB 3.0 specification
- Simple and cost effective termination by plug in patch cable
- Cable tie strain relief

Technical characteristics

Number of contacts	4, 8
Electrical data acc. to IEC 61984	1 A 50 V 0,8 kV 3
Rated current	1 A
Rated voltage	50 V
Rated impulse voltage	0.8 kV
Pollution degree	3
Rated voltage acc. to UL	30 V
Insulation resistance	$\geq 10^{10}$ Ω
Limiting temperature	-40 ... +85 °C
Mating cycles	≥500
Material (insert)	Polycarbonate
Colour (insert)	RAL 7032 (pebble grey)
Material flammability class acc. to UL 94	V-0
RoHS	compliant

Specifications and approvals

EN 60664-1
IEC 60352-4
UL 1977 ECBT2.E235076
DNV GL

Han® USB module

Number of contacts

4

1 A 50 V 0,8 kV 3

Identification	Conductor cross-section (mm²)	Part number Male	Part number Female	Drawing (dimensions in mm)
Han-Modular® , Han® USB module, for patch cable  USB 2.0		09 14 001 4601	09 14 001 4701	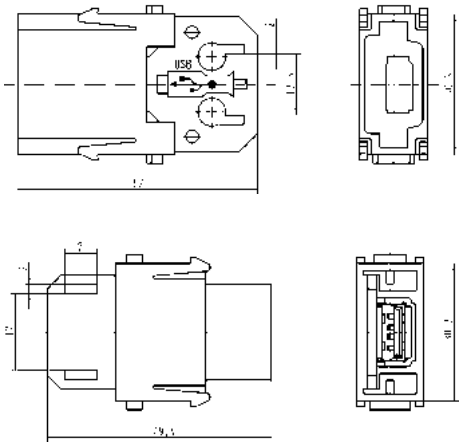
Han-Modular® , Han® USB module, for patch cable  USB 3.0			09 14 001 4703	
Han-Modular® , Han® USB module, for screw termination, Screw termination  USB 2.0	0,14 ... 0,5	09 14 001 4651		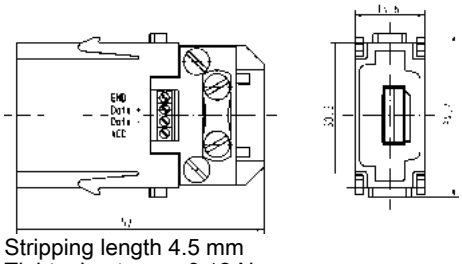 Stripping length 4.5 mm Tightening torque 0.12 Nm

Han® FireWire module

1 A 50 V 0,8 kV 3

Features

- Compatibel to IEEE 1394
- Simple and cost effective termination by plug in patch cable
- Cable tie strain relief

Technical characteristics

Number of contacts	6
Electrical data acc. to IEC 61984	1 A 50 V 0,8 kV 3
Rated current	1 A
Rated voltage	50 V
Rated impulse voltage	0.8 kV
Pollution degree	3
Insulation resistance	$\geq 10^{10}$ Ω
Limiting temperature	-40 ... +85 °C
Mating cycles	≥500
Material (insert)	Polycarbonate
Colour (insert)	RAL 7032 (pebble grey)
Material flammability class acc. to UL 94	V-0
RoHS	compliant

Specifications and approvals

EN 60664-1
IEC 61984
UL 1977 ECBT2.E235076
DNV GL

Identification	Part number Male	Part number Female	Drawing (dimensions in mm)
Han-Modular® , Han® FireWire module, for patch cable 	09 14 001 4611	09 14 001 4711	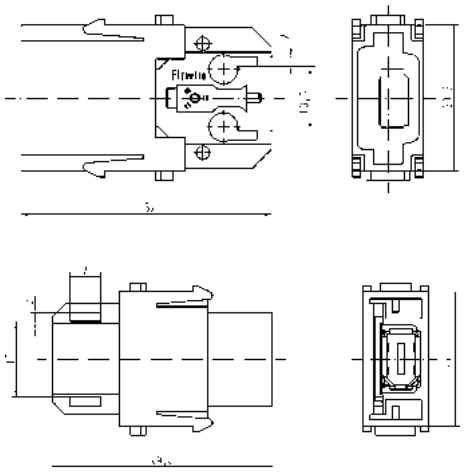

Han® RJ45 module, female

Number of contacts

8

Features

- Single module with standard shielded RJ45 plug and jack
- Cat. 6 for all data pairs (8-pin)
- Patch cables are assembled/removed without tools

Technical characteristics

Number of contacts	8, 4
Electrical data acc. to IEC 61984	1 A 50 V 0,8 kV 3
Rated current	1 A
Rated voltage	50 V
Rated impulse voltage	0.8 kV
Pollution degree	3
Rated voltage acc. to UL	30 V
Insulation resistance	≥10^{10} Ω
Limiting temperature	-40 ... +70 °C
Mating cycles	≥500
Transmission characteristics	Cat. 6_A, Class E_A up to 500 MHz, Cat. 5, Class D up to 100 MHz
Data rate	10 Mbit/s, 100 Mbit/s, 1 Gbit/s, 10 Gbit/s
Material (insert)	Polyamide, Polycarbonate, Zinc die-cast, nickel-plated
Material (shielding)	Zinc die-cast, nickel-plated
Colour (insert)	RAL 7032 (pebble grey)
Material flammability class acc. to UL 94	V-0
RoHS	compliant

Specifications and approvals

EN 60664-1
IEC 61984
DNV GL
UL 1977 ECBT2.E235076

Identification	Part number	Drawing (dimensions in mm)
Han-Modular® , Han® RJ45 module, Single module  Please order insert separately.	09 14 001 4722	
Han-Modular® , Han® RJ45 module, Gender changer, for patch cable, 8-pins, Cat. 6_A 	09 14 001 4721	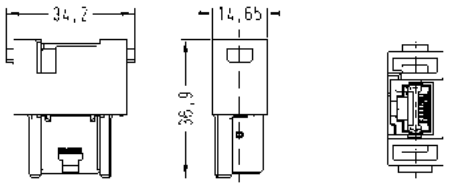

Han® RJ45 module, female

Identification		Part number	Drawing (dimensions in mm)
Data connectors, Han® RJ45 cable jack, preLink® termination, 8-pins, Cat. 6_A 	AWG 23 ... AWG 22	09 14 008 4720	
Data connectors, Han® RJ45 cable jack, IDC termination, 4-pin, Cat. 5 	AWG 24 ... AWG 22	09 14 545 1120	
Data connectors, Han® RJ45 cable jack, IDC termination, 8-pins, Cat. 6_A 	AWG 24 ... AWG 22 AWG 28 ... AWG 24	09 14 545 1562 09 14 545 1561	

Han® RJ45 module, male

Number of contacts

8

1 A 50 V 0,8 kV 3

Features

- Single module with standard shielded RJ45 plug and jack
- The RJ45 inserts are protected by a reliable plastic insulator

Technical characteristics

Number of contacts	8
Electrical data acc. to IEC 61984	1 A 50 V 0,8 kV 3
Rated current	1 A
Rated voltage	50 V
Rated impulse voltage	0.8 kV
Pollution degree	3
Rated voltage acc. to UL	30 V
Insulation resistance	≥10^{10} Ω
Limiting temperature	-40 ... +70 °C
Mating cycles	≥500
Transmission characteristics	Cat. 5, Class D up to 100 MHz
Data rate	10 Mbit/s, 100 Mbit/s
Material (insert)	Polycarbonate
Colour (insert)	RAL 7032 (pebble grey)
Material flammability class acc. to UL 94	V-0
RoHS	compliant

Specifications and approvals

EN 60664-1
IEC 61984
UL 1977 ECBT2.E235076
DNV GL

Identification	Part number	Drawing (dimensions in mm)
Han-Modular® , Han® RJ45 module  for data connectors	09 14 001 4622	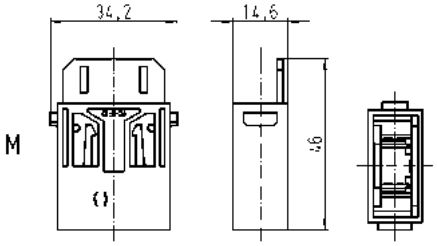
RJ45 , Data connectors, for Han® RJ45 module, Cat. 5 	09 12 000 9958	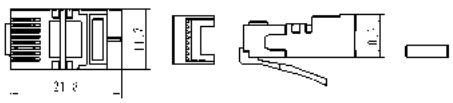

Han® RJ45 module, male

Features

- Single module with standard shielded RJ45 plug and jack
- The RJ45 inserts are protected by a reliable plastic insulator
- 360° shielded contact
- Field assembly without tools possible by means of *HARAX*® rapid termination in IDC technology
- Suitable for termination of massive and flexible wires

Technical characteristics

Number of contacts	4
Insulation resistance	≥10^{10} Ω
Limiting temperature	-40 ... +70 °C
Mating cycles	≥500
Wire outer diameter	≤1,6 mm
Transmission characteristics	Cat. 5, Class D up to 100 MHz
Data rate	10 Mbit/s, 100 Mbit/s
Material (insert)	Polycarbonate, Polyamide
Colour (insert)	RAL 7032 (pebble grey)
Material flammability class acc. to UL 94	V-0
RoHS	compliant

Specifications and approvals

EN 60664-1
IEC 61984
DNV GL
IEC 60603-7

Identification		Part number	Drawing (dimensions in mm)
Han-Modular® , Han® RJ45 module, Single module 		09 14 001 4623	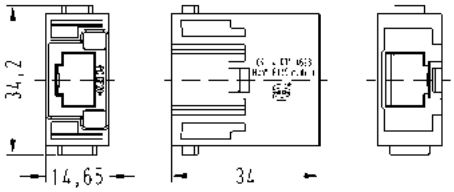
Data connectors, RJ Industrial RJ45 connector set 	AWG 24 ... AWG 22 AWG 26	09 45 400 1100 09 45 400 1109	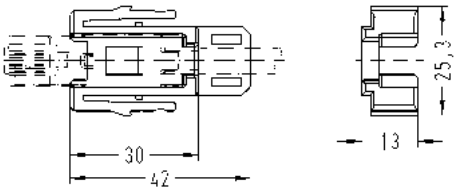 Wire outer diameter ≤ 1.6 mm

Han® RJ45 module, male

Features

- Single module with standard shielded RJ45 plug and jack
- The RJ45 inserts are protected by a reliable plastic insulator
- 360° shielded contact
- Field assembly without tools possible by means of *HARAX*® rapid termination in IDC technology
- Gigalink: Field assembly by means of piercing contacts (Assembly tool 09 45 800 0520)
- Suitable for termination of massive and flexible wires
- Gigalink: Suitable for termination of flexible wires

Technical characteristics

Number of contacts	8
Insulation resistance	≥10^{10} Ω
Limiting temperature	-40 ... +70 °C
Mating cycles	≥500
Wire outer diameter	≤1,05 mm, ≤1,5 mm
Transmission characteristics	Cat. 6_A, Class E_A up to 500 MHz, Cat. 6, Class E up to 250 MHz
Data rate	10 Mbit/s, 100 Mbit/s, 1 Gbit/s, 10 Gbit/s
Material (insert)	Polycarbonate, Polyamide
Colour (insert)	RAL 7032 (pebble grey)
Material flammability class acc. to UL 94	V-0
RoHS	compliant

Specifications and approvals

EN 60664-1
IEC 61984
DNV GL
IEC 60603-7
UL 1977 ECBT2.E102079
CSA-C22.2 No. 182.3 ECBT8.E102079

Identification		Part number	Drawing (dimensions in mm)
Han-Modular® , Han® RJ45 module, Single module 		09 14 001 4623	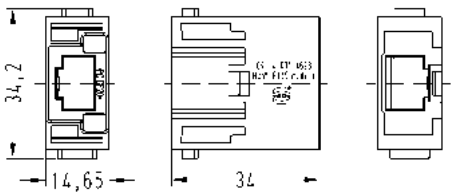
Data connectors, RJ Industrial RJ45 Gigalink connector set, Cat. 6_A 	AWG 28 ... AWG 24	09 45 400 1520	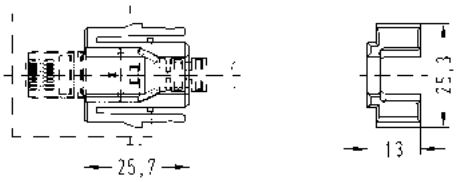 Wire outer diameter ≤ 1.05 mm
Data connectors, RJ Industrial RJ45 connector set, Cat. 6 	AWG 27 ... AWG 22	09 45 400 1560	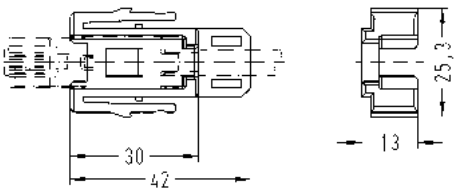 Wire outer diameter ≤ 1.5 mm

RJ45 patch cable

Features

- Single module with standard shielded RJ45 plug and jack
- The RJ45 inserts are protected by a reliable plastic insulator
- Patch cables are assembled/removed without tools

Technical characteristics

Insulation resistance	≥10^{10} Ω
Limiting temperature	-40 ... +125 °C
Mating cycles	≥500
Material (insert)	Polycarbonate
Colour (insert)	RAL 7032 (pebble grey)
Material flammability class acc. to UL 94	V-0
RoHS	compliant

Specifications and approvals

EN 60664-1
IEC 61984
DNV GL

Identification	Part number	Drawing (dimensions in mm)
Han-Modular® , Han® RJ45 module, Single module 	09 14 001 4623	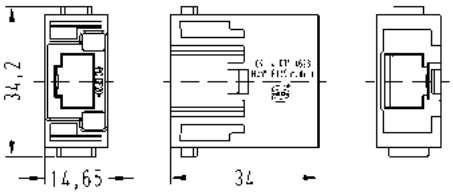
Han-Modular® , Han® RJ45 module, Adapter, for patch cable 	09 14 000 9966	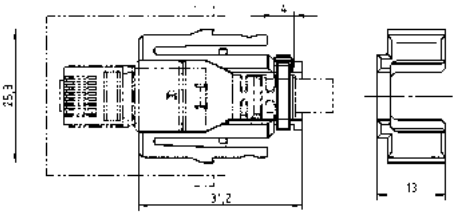

RJ45 patch cable

4x 2 Twisted Pair
HARTING RJ Industrial®
HARTING RJ Industrial®



Features

- Locking lever protection for RJ45 connector latch
- Very short plug design in combination with robust bend protection
- Fully EMC screened (aluminium-clad foil and braid)

Technical characteristics

Number of cores	8
Core structure	4x 2 Twisted Pair
Connector 1	HARTING RJ Industrial®
Connector 2	HARTING RJ Industrial®
Limiting temperature	-30 ... +75 °C unmoved, -5 ... +50 °C moved
Degree of protection acc. to IEC 60529	IP20
Transmission characteristics	Cat. 5e, Class D up to 100 MHz
Data rate	10 Mbit/s, 100 Mbit/s, 1 Gbit/s
Material (cable)	PUR (polyurethane)
Colour (cable)	Yellow
RoHS	compliant

Specifications and approvals

IEC 11801
IEC 24702
IEC 61935-2

CE

Details

Other cable lengths on request!

Identification	Cable length	Part number	Drawing (dimensions in mm)
RJ45 , Copper cable (round), Halogen-free, oil resistant, Pre-assembled on both sides	0.2 m 0.3 m 0.4 m 0.5 m 0.6 m 0.7 m 0.8 m 0.9 m 1 m 1.5 m 2 m 2.5 m 3 m 3.5 m 4 m 5 m 6 m 7 m 7.5 m 8 m 9 m 10 m 12 m 15 m 20 m 25 m 30 m 35 m 40 m 50 m	09 47 474 7001 09 47 474 7002 09 47 474 7003 09 47 474 7004 09 47 474 7005 09 47 474 7006 09 47 474 7007 09 47 474 7008 09 47 474 7009 09 47 474 7010 09 47 474 7011 09 47 474 7012 09 47 474 7013 09 47 474 7024 09 47 474 7014 09 47 474 7015 09 47 474 7016 09 47 474 7017 09 47 474 7018 09 47 474 7019 09 47 474 7020 09 47 474 7021 09 47 474 7035 09 47 474 7022 09 47 474 7023 09 47 474 7025 09 47 474 7027 09 47 474 7026 09 47 474 7028 09 47 474 7029	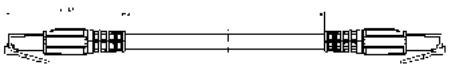

RJ45 patch cable

4x 2 Twisted Pair
HARTING RJ Industrial®
HARTING RJ Industrial®



Modu-
lar

Features

- Locking lever protection for RJ45 connector latch
- Very short plug design in combination with robust bend protec-tion
- Fully EMC screened (aluminium-clad foil and braid)

Technical characteristics

Number of cores	8
Core structure	4x 2 Twisted Pair
Connector 1	HARTING RJ Industrial®
Connector 2	HARTING RJ Industrial®
Limiting temperature	-30 ... +75 °C unmoved, -5 ... +50 °C moved
Degree of protection acc. to IEC 60529	IP20
Transmission characteristics	Cat. 6, Class E up to 250 MHz
Data rate	10 Mbit/s, 100 Mbit/s, 1 Gbit/s, 10 Gbit/s
Material (cable)	PUR (polyurethane)
Colour (cable)	Yellow
RoHS	compliant

Specifications and approvals

IEC 11801
IEC 61156-6
IEC 24702

CE

Details

Other cable lengths on request!

Identification	Cable length	Part number	Drawing (dimensions in mm)
RJ45 , Copper cable (round), Wiring 1:1, Halogen-free, oil resistant, Pre-assembled on both sides	0.2 m 0.3 m 0.4 m 0.5 m 0.6 m 0.7 m 0.8 m 0.9 m 1 m 1.5 m 2 m 2.5 m 3 m 4 m 5 m 6 m 7 m 7.5 m 8 m 9 m 10 m 15 m 16 m 20 m 25 m 30 m 100 m	09 47 474 7101 09 47 474 7102 09 47 474 7103 09 47 474 7104 09 47 474 7105 09 47 474 7106 09 47 474 7107 09 47 474 7108 09 47 474 7109 09 47 474 7110 09 47 474 7111 09 47 474 7112 09 47 474 7113 09 47 474 7114 09 47 474 7115 09 47 474 7116 09 47 474 7117 09 47 474 7118 09 47 474 7119 09 47 474 7120 09 47 474 7121 09 47 474 7122 09 47 474 7124 09 47 474 7123 09 47 474 7126 09 47 474 7125 09 47 474 7199	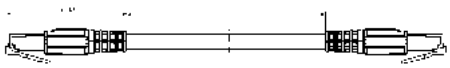

Han® Gigabit module

Features

- Shielding bus separate from housing potential
- Suitable for the transmission of sensitive signals (e.g. bus signals)
- Usable for Gigabit Ethernet cat. 6_A

Technical characteristics

Number of contacts	8
Additional contacts	+ shielding
Electrical data acc. to IEC 61984	5 A 50 V 0,8 kV 3
Rated current	5 A
Rated voltage	50 V
Rated impulse voltage	0.8 kV
Pollution degree	3
Insulation resistance	$\geq 10^{10}$ Ω
Contact resistance	≤10 mΩ
Contact resistance, shielding	≤10 mΩ
Limiting temperature	-40 ... +85 °C
Mating cycles	≥500
Transmission characteristics	Cat. 6_A, Class E_A up to 500 MHz, Cat. 7_A, Class F_A up to 1,000 MHz
Data rate	10 Mbit/s, 100 Mbit/s, 1 Gbit/s, 10 Gbit/s
Material (insert)	Polycarbonate
Material (shielding)	Zinc die-cast, nickel-plated
Colour (insert)	RAL 7032 (pebble grey)
Material (contacts)	Copper alloy
Material flammability class acc. to UL 94	V-0
RoHS	compliant, compliant with exemption
RoHS exemptions	**6c:** Copper alloy containing up to 4 % lead by weight

Specifications and approvals

EN 60664-1
IEC 61984
UL 1977 ECBT2.E102079
DNV GL
UL 1977 ECBT2.E235076

Han® Gigabit module

Number of contacts

8

5 A 50 V 0,8 kV 3
+ shielding

Identification	Conductor cross-section (mm²)	Part number Male	Part number Female	Drawing (dimensions in mm)
Han-Modular® , Adapter module 		09 14 001 3011	09 14 001 3111	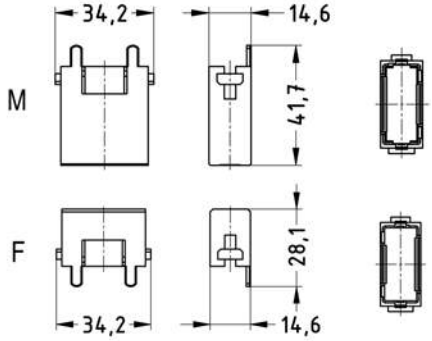
Han® Gigabit insert, Crimp termination, Cat. 6_A  Please order crimp contacts separately. Please order adapter module separately.	0,09 ... 0,52	09 14 008 3011	09 14 008 3111	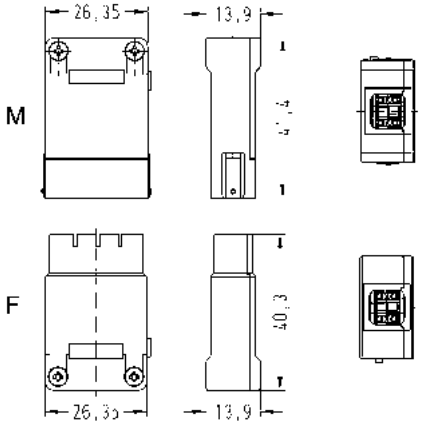 Cable outer diameter ≤ 14 mm
Han® Gigabit insert, Crimp termination, Cat. 6_A  With additional shield connection to the hinged frame Please order crimp contacts separately. Please order adapter module separately.	0,09 ... 0,52	09 14 008 3012	09 14 008 3112	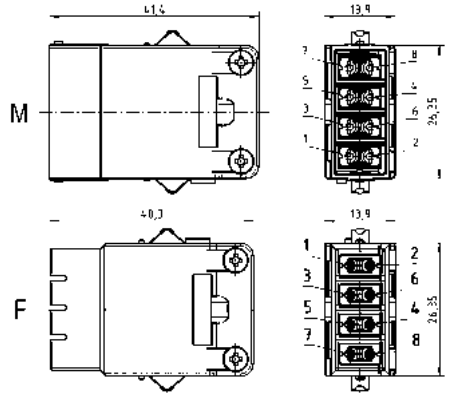 Cable outer diameter ≤ 14 mm

Identification	Conductor cross-section (mm²)	Part number Male	Part number Female	Drawing (dimensions in mm)
D-Sub , Standard, Crimp contact, Turned , Pack contents: Single contact 	0,09 ... 0,25 0,13 ... 0,33 0,25 ... 0,52	09 67 000 7576 09 67 000 5576 09 67 000 8576	09 67 000 7476 09 67 000 5476 09 67 000 8476	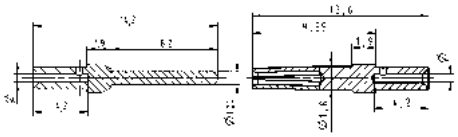 Wire gauge / ø / Stripping length 0.09-0.25 mm² / 0.64 mm / 4 mm 0.13-0.33 mm² / 0.88 mm / 4 mm 0.25-0.52 mm² / 1.13 mm / 4 mm 0.33-0.82 mm² / 1.34 mm / 4 mm for stranded wire according IEC 60228 Class 5

Han® Gigabit module

Number of contacts

8

5 A 50 V 0,8 kV 3
+ shielding

Identification	Conductor cross-section (mm²)	Part number Male	Part number Female	Drawing (dimensions in mm)
Han-Modular® , Adapter module 		09 14 001 3011	09 14 001 3111	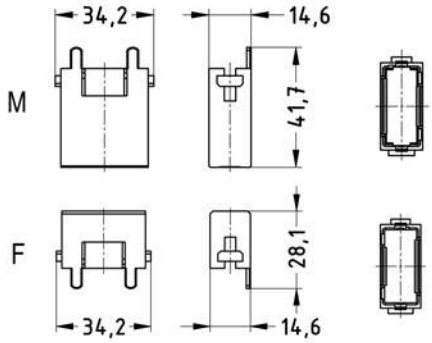
Han® Gigabit insert, Crimp termination, Cat. 7_A  Please order crimp contacts separately. Please order adapter module separately.	0,09 ... 0,52	09 14 008 3031	09 14 008 3131	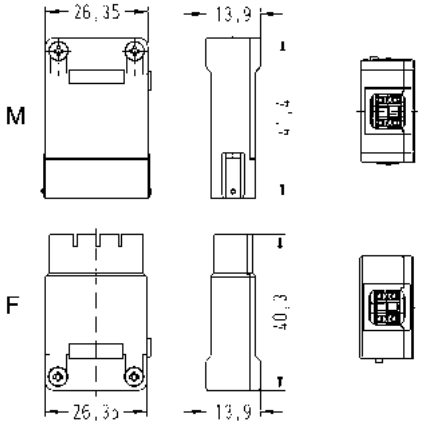 Cable outer diameter ≤ 14 mm
Han® Gigabit insert, Crimp termination, Cat. 7_A  With additional shield connection to the hinged frame Please order crimp contacts separately. Please order adapter module separately.	0,09 ... 0,52	09 14 008 3032	09 14 008 3132	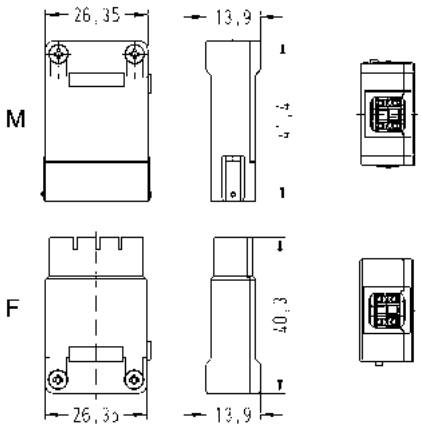 Cable outer diameter ≤ 14 mm

Han® Gigabit module

Identification	Conductor cross-section (mm²)	Part number Male	Part number Female	Drawing (dimensions in mm)
D-Sub , Crimp contact, Turned , Pack contents: Single contact 	0,13 ... 0,33	09 93 000 5576	09 93 000 5476	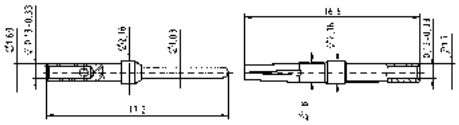

Han® Shielded module

Features

- Shielding bus separate from housing potential
- Suitable for the transmission of sensitive signals (e.g. bus signals)

Technical characteristics

Number of contacts	20
Additional contacts	+ shielding
Electrical data acc. to IEC 61984	4 A 32 V 0,8 kV 3
Rated current	4 A
Rated voltage	32 V
Rated impulse voltage	0.8 kV
Pollution degree	3
Insulation resistance	≥10^{10} Ω
Contact resistance	≤10 mΩ
Contact resistance, shielding	≤10 mΩ
Limiting temperature	-40 ... +85 °C
Mating cycles	≥500
Material (insert)	LCP, Polycarbonate
Material (shielding)	Zinc die-cast, nickel-plated
Colour (insert)	RAL 7032 (pebble grey)
Material (contacts)	Copper alloy
Material flammability class acc. to UL 94	V-0
RoHS	compliant, compliant with exemption
RoHS exemptions	**6c:** Copper alloy containing up to 4 % lead by weight

Specifications and approvals

EN 60664-1
IEC 61984
UL 1977 ECBT2.E102079
DNV GL
UL 1977 ECBT2.E235076

Han® Shielded module

Number of contacts

20

4 A 32 V 0,8 kV 3
+ shielding

Identification	Conductor cross-section (mm²)	Part number Male	Part number Female	Drawing (dimensions in mm)
Han-Modular® , Adapter module 		09 14 001 3011	09 14 001 3111	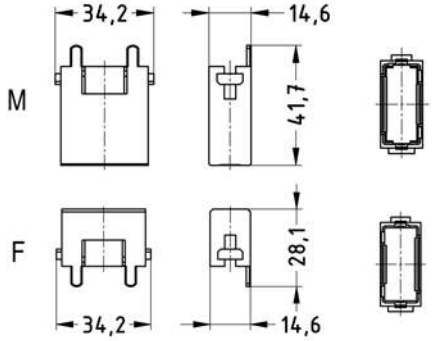
Han® Shielded Module insert, Crimp termination  Please order crimp contacts separately.	0,09 ... 0,52	09 14 020 3013	09 14 020 3113	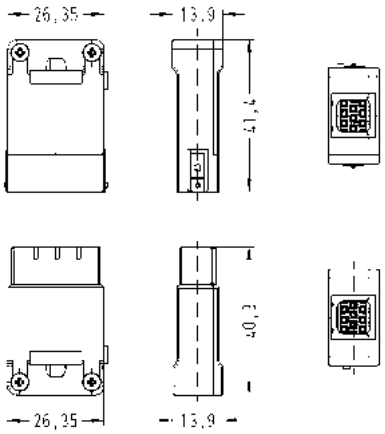
D-Sub , Standard, Crimp contact, Turned , Pack contents: Single contact 	0,09 ... 0,25 0,13 ... 0,33 0,25 ... 0,52	09 67 000 7576 09 67 000 5576 09 67 000 8576	09 67 000 7476 09 67 000 5476 09 67 000 8476	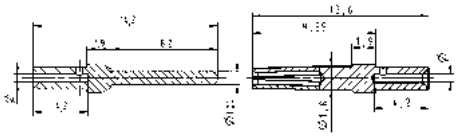

Wire gauge	ø	Stripping length
0.09-0.25 mm²	0.64 mm	4 mm
0.13-0.33 mm²	0.88 mm	4 mm
0.25-0.52 mm²	1.13 mm	4 mm
0.33-0.82 mm²	1.34 mm	4 mm

for stranded wire according IEC 60228 Class 5

Han® Megabit module

Features

- Shielding bus separate from housing potential
- Usable for Megabit Ethernet cat. 5e
- Suitable for Han® B, Han® M, Han® EMC and Han® HPR hoods/housings, high construction

Technical characteristics

Number of contacts	8
Additional contacts	+ shielding
Electrical data acc. to IEC 61984	10 A 50 V 0,8 kV 3
Rated current	10 A
Rated voltage	50 V
Rated impulse voltage	0.8 kV
Pollution degree	3
Insulation resistance	≥10^{10} Ω
Contact resistance	≤3 mΩ
Contact resistance, shielding	≤10 mΩ
Limiting temperature	-40 ... +85 °C
Mating cycles	≥500
Transmission characteristics	Cat. 5, Class D up to 100 MHz
Data rate	10 Mbit/s, 100 Mbit/s
Material (insert)	Polycarbonate
Material (shielding)	Zinc die-cast, nickel-plated
Colour (insert)	RAL 7032 (pebble grey)
Material (contacts)	Copper alloy
Material flammability class acc. to UL 94	V-0
RoHS	compliant, compliant with exemption
RoHS exemptions	**6c:** Copper alloy containing up to 4 % lead by weight

Specifications and approvals

EN 60664-1
IEC 61984
UL 1977 ECBT2.E102079
DNV GL
UL 1977 ECBT2.E235076

Details

Not suitable for hoods/housings low construction as well as Han-Modular® Eco, Han-Modular® Compact and Han-Modular® Twin.

Crimping tools see chapter 90

Remarks on the crimp technique

The wire gauges mentioned in the catalogue refer to geometric wire gauges of cables.

Han® Megabit module

Number of contacts

8

10 A 50 V 0,8 kV 3
+ shielding

Identification	Conductor cross-section (mm²)	Part number Male	Part number Female	Drawing (dimensions in mm)
Han® Megabit insert, 2x 4 contacts, 2 cable entries, Crimp termination  Please order crimp contacts separately. Please order adapter module separately.	0,14 ... 2,5	09 14 008 3016	09 14 008 3116	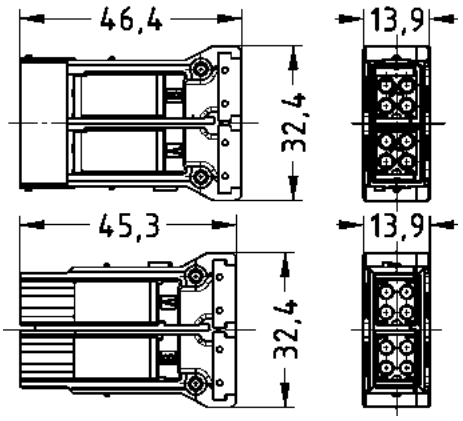
Han® Megabit insert, 2x 4 contacts, One entry, Crimp termination  2x 4 contacts Please order crimp contacts separately. Please order adapter module separately.	0,14 ... 2,5	09 14 008 3021	09 14 008 3121	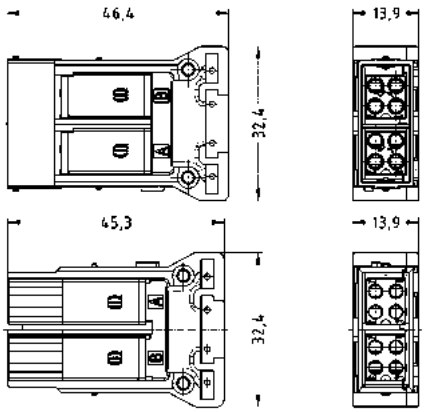
Han D® , Crimp contact, Contact surface: Gold plated 	0,14 ... 0,37 0,5 0,75 1 1,5 2,5	09 15 000 6124 09 15 000 6123 09 15 000 6125 09 15 000 6122 09 15 000 6121 09 15 000 6126	09 15 000 6224 09 15 000 6223 09 15 000 6225 09 15 000 6222 09 15 000 6221 09 15 000 6226	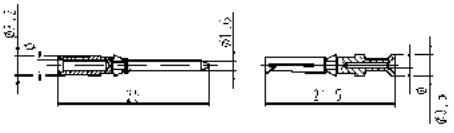 Wire gauge / ∅ / Stripping length 0.14-0.37 mm² AWG 26-22 — 0.9 mm — 8 mm 0.5 mm² AWG 20 — 1.1 mm — 8 mm 0.75 mm² AWG 18 — 1.3 mm — 8 mm 1 mm² AWG 18 — 1.45 mm — 8 mm 1.5 mm² AWG 16 — 1.75 mm — 8 mm 2.5 mm² AWG 14 — 2.25 mm — 6 mm

Han® Megabit module

Number of contacts

8

10 A 50 V 0,8 kV 3
+ shielding

Identification	Conductor cross-section (mm²)	Part number Male	Part number Female	Drawing (dimensions in mm)
Han-Modular® , Adapter module 		09 14 001 3011	09 14 001 3111	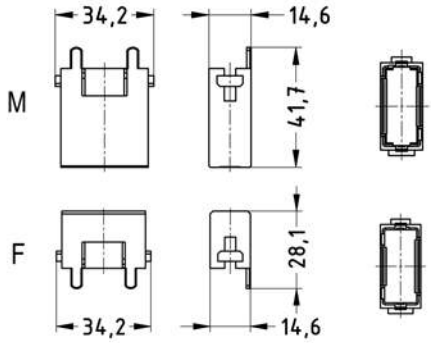
Han® Megabit insert, 2x 4 contacts, 2 cable entries, Crimp termination  With additional shield connection to the hinged frame Please order crimp contacts separately. Please order adapter module separately.	0,14 ... 2,5	09 14 008 3017	09 14 008 3117	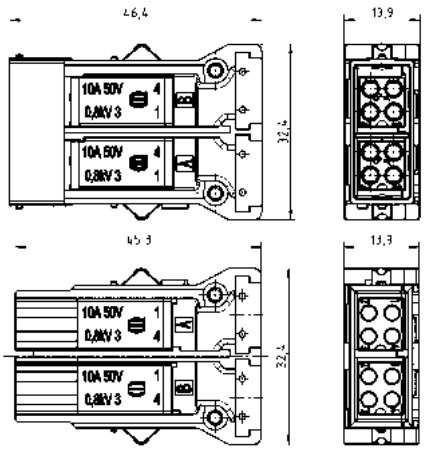
Han® Megabit insert, 2x 4 contacts, One entry, Crimp termination 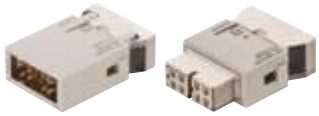 2x 4 contacts With additional shield connection to the hinged frame Please order crimp contacts separately. Please order adapter module separately.	0,14 ... 2,5	09 14 008 3022	09 14 008 3122	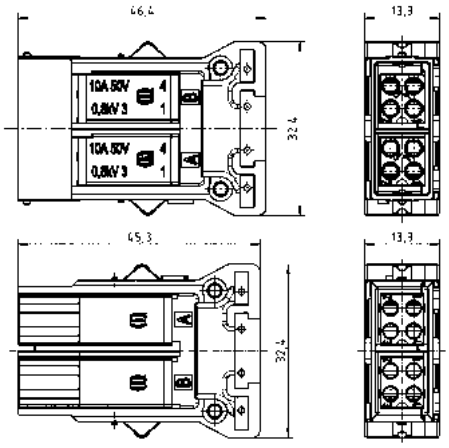

Han® Megabit module

Identification	Conductor cross-section (mm²)	Part number Male	Part number Female	Drawing (dimensions in mm)
Han D® , Crimp contact, Contact surface: Gold plated 	0,14 ... 0,37 0,5 0,75 1 1,5 2,5	09 15 000 6124 09 15 000 6123 09 15 000 6125 09 15 000 6122 09 15 000 6121 09 15 000 6126	09 15 000 6224 09 15 000 6223 09 15 000 6225 09 15 000 6222 09 15 000 6221 09 15 000 6226	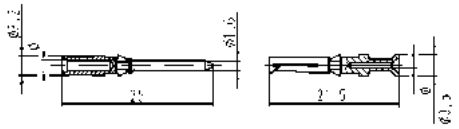

Wire gauge		∅	Stripping length
0.14-0.37 mm²	AWG 26-22	0.9 mm	8 mm
0.5 mm²	AWG 20	1.1 mm	8 mm
0.75 mm²	AWG 18	1.3 mm	8 mm
1 mm²	AWG 18	1.45 mm	8 mm
1.5 mm²	AWG 16	1.75 mm	8 mm
2.5 mm²	AWG 14	2.25 mm	6 mm

Technical characteristics

Material (accessories)	Zinc die-cast
RoHS	compliant

Details

09 14 000 9983, 61 03 000 0143 and 61 03 000 0148 only for modules with one cable entry!

Identification		Cable diameter (mm)	Part number	Drawing (dimensions in mm)
Cable clamp		6 ... 10	09 14 000 9983	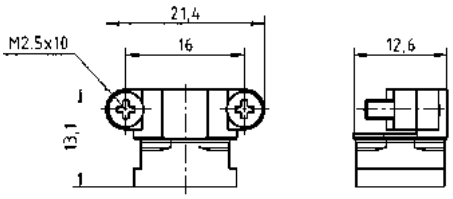
Cable clamp, D-Sub 1 ... 4		5 ... 7 7 ... 10 9 ... 12 11 ... 14	61 03 000 0141 61 03 000 0044 61 03 000 0143 61 03 000 0148	

Technical characteristics

RoHS	compliant with exemption
RoHS exemptions	**6c:** Copper alloy containing up to 4 % lead by weight

Details

HARTING offers to test and define the best crimp flange and ferrule combination for customer specific cables.

Identification	Inner diameter	Outer diameter	Part number	Drawing (dimensions in mm)
D-Sub , Crimp flange, D-Sub 1 ... 4 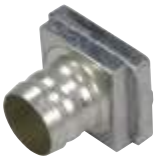	3 mm	4 mm	61 03 000 0062	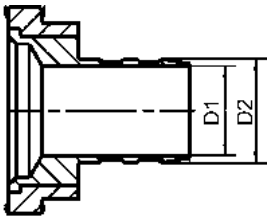 D1 = Inner diameter D2 = Outer diameter
	3.5 mm	4.5 mm	61 03 000 0063	
	4 mm	5 mm	61 03 000 0064	
	4.5 mm	5.5 mm	61 03 000 0065	
	5 mm	6 mm	61 03 000 0066	
	5.5 mm	6.5 mm	61 03 000 0166	
	6 mm	7 mm	61 03 000 0067	
	6.5 mm	7.5 mm	61 03 000 0068	
	7 mm	8 mm	61 03 000 0069	
	7.5 mm	8.5 mm	61 03 000 0070	
	8 mm	9 mm	61 03 000 0071	
	8.5 mm	9.5 mm	61 03 000 0165	
	9 mm	10 mm	61 03 000 0072	
D-Sub , Crimp ferrule 	5 mm	6 mm	61 03 000 0045	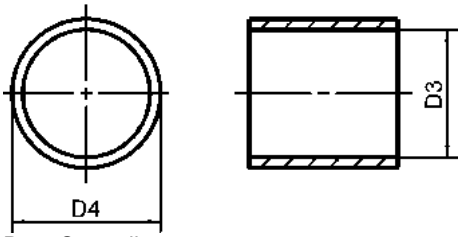 D4 = Outer diameter D3 = Inner diameter
	5.5 mm	6.5 mm	61 03 000 0046	
	6 mm	7 mm	61 03 000 0047	
	6.5 mm	7.5 mm	61 03 000 0048	
	7 mm	8 mm	61 03 000 0049	
	7.5 mm	8.5 mm	61 03 000 0050	
	8 mm	9 mm	61 03 000 0051	
	8.5 mm	9.5 mm	61 03 000 0052	
	9 mm	10 mm	61 03 000 0053	
	9.5 mm	10.5 mm	61 03 000 0054	
	10 mm	11 mm	61 03 000 0055	
	10.5 mm	11.5 mm	61 03 000 0056	
	11 mm	12 mm	61 03 000 0057	
	11.5 mm	12.5 mm	61 03 000 0058	
	12 mm	13 mm	61 03 000 0142	
	12.5 mm	13.5 mm	61 03 000 0059	
	13 mm	14 mm	61 03 000 0127	
	13.7 mm	15 mm	61 03 000 0060	
	14 mm	15 mm	61 03 000 0061	

Features

- Shielding bus separate from housing potential
- Suitable for the transmission of sensitive signals (e.g. bus signals)
- The four pole Han® Quintax contact is suitable for Ethernet cat. 5e and PROFIBUS when diagonally wiring of the data pairs.

Technical characteristics

Number of contacts	4
Additional contacts	+ shielding
Electrical data acc. to IEC 61984	10 A 50 V 0,8 kV 3
Rated current	10 A
Rated voltage	50 V
Rated impulse voltage	0.8 kV
Pollution degree	3
Insulation resistance	≥10^{10} Ω
Contact resistance	≤3 mΩ
Contact resistance, shielding	≤10 mΩ
Limiting temperature	-40 ... +85 °C
Mating cycles	≥500
Material (insert)	Polycarbonate
Material (shielding)	Zinc die-cast, nickel-plated
Colour (insert)	RAL 7032 (pebble grey)
Material (contacts)	Copper alloy
Material (accessories)	Metal
Material flammability class acc. to UL 94	V-0
RoHS	compliant, compliant with exemption
RoHS exemptions	**6c:** Copper alloy containing up to 4 % lead by weight

Specifications and approvals

EN 60664-1
IEC 61984
UL 1977 ECBT2.E235076
CSA-C22.2 No. 182.3 ECBT8.E235076
DNV GL
UL 1977 ECBT2.E102079
CSA-C22.2 No. 182.3 ECBT8.E102079

Details

Crimping tools see chapter 90

Remarks on the crimp technique

The wire gauges mentioned in the catalogue refer to geometric wire gauges of cables.

Identification	Conductor cross-section (mm²)	Part number Male	Part number Female	Drawing (dimensions in mm)
Han-Modular® , Han-Quintax® module, Crimp termination 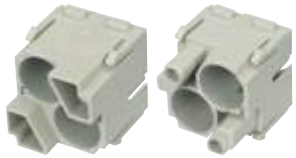		09 14 002 3001	09 14 002 3101	M F 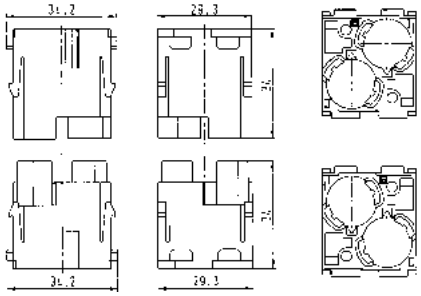 Contact arrangement (view from termination side)
Han-Quintax® , for Han D® crimp contacts  Please order crimp contacts separately.	0,14 ... 2,5	09 15 004 3013	09 15 004 3113	M 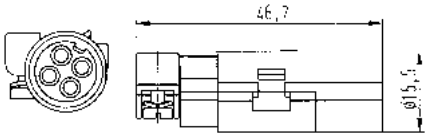 F 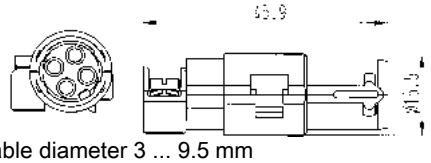 Cable diameter 3 ... 9.5 mm
Han D® , Crimp contact, Contact surface: Gold plated 	0,14 ... 0,37 0,5 0,75 1 1,5 2,5	09 15 000 6124 09 15 000 6123 09 15 000 6125 09 15 000 6122 09 15 000 6121 09 15 000 6126	09 15 000 6224 09 15 000 6223 09 15 000 6225 09 15 000 6222 09 15 000 6221 09 15 000 6226	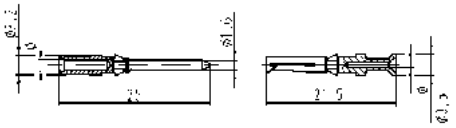 Wire gauge / ∅ / Stripping length 0.14-0.37 mm² AWG 26-22 — 0.9 mm — 8 mm 0.5 mm² AWG 20 — 1.1 mm — 8 mm 0.75 mm² AWG 18 — 1.3 mm — 8 mm 1 mm² AWG 18 — 1.45 mm — 8 mm 1.5 mm² AWG 16 — 1.75 mm — 8 mm 2.5 mm² AWG 14 — 2.25 mm — 6 mm
Han-Quintax®, Adapter, Metal  Optional		09 14 000 9915	09 14 000 9915	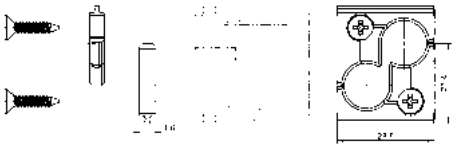

Technical characteristics

Number of contacts	8
Additional contacts	+ shielding
Electrical data acc. to IEC 61984	5 A 50 V 0,8 kV 3
Rated current	5 A
Rated voltage	50 V
Rated impulse voltage	0.8 kV
Pollution degree	3
Insulation resistance	≥10^{10} Ω
Contact resistance	≤10 mΩ
Contact resistance, shielding	≤10 mΩ
Limiting temperature	-40 ... +85 °C
Mating cycles	≥500
Material (insert)	Polycarbonate
Material (shielding)	Zinc die-cast, nickel-plated
Colour (insert)	RAL 7032 (pebble grey)
Material (contacts)	Copper alloy

Technical characteristics

Material (accessories)	Metal
Material flammability class acc. to UL 94	V-0
RoHS	compliant, compliant with exemption
RoHS exemptions	**6c:** Copper alloy containing up to 4 % lead by weight

Specifications and approvals

EN 60664-1
IEC 61984
UL 1977 ECBT2.E235076
CSA-C22.2 No. 182.3 ECBT8.E235076
DNV GL
UL 1977 ECBT2.E102079
CSA-C22.2 No. 182.3 ECBT8.E102079

Han-Quintax® High Density module

Identification	Conductor cross-section (mm²)	Part number Male	Part number Female	Drawing (dimensions in mm)
Han-Modular® , Han-Quintax® module, Crimp termination 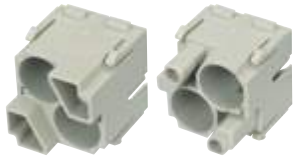		09 14 002 3001	09 14 002 3101	M F 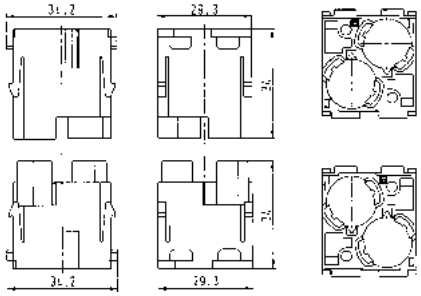 Contact arrangement (view from termination side)
Han-Quintax® High Density , for Han® D-Sub crimp contacts  Please order crimp contacts separately.	0,09 ... 0,52	09 15 008 3013	09 15 008 3113	M F 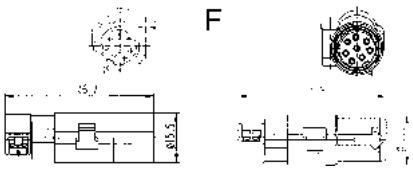 Cable diameter 3 ... 9.5 mm
Han-Quintax®, Adapter, Metal  Optional		09 14 000 9915	09 14 000 9915	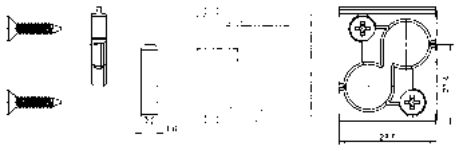
D-Sub , Standard, Crimp contact, Turned , Pack contents: Single contact 	0,09 ... 0,25 0,13 ... 0,33 0,25 ... 0,52	09 67 000 7576 09 67 000 5576 09 67 000 8576	09 67 000 7476 09 67 000 5476 09 67 000 8476	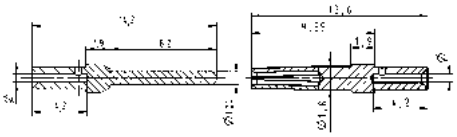 Wire gauge / ø / Stripping length 0.09-0.25 mm² / 0.64 mm / 4 mm 0.13-0.33 mm² / 0.88 mm / 4 mm 0.25-0.52 mm² / 1.13 mm / 4 mm 0.33-0.82 mm² / 1.34 mm / 4 mm for stranded wire according IEC 60228 Class 5

Technical characteristics

Number of contacts	1
Additional contacts	+ shielding
Electrical data acc. to IEC 61984	10 A 50 V 0,8 kV 3
Rated current	10 A
Rated voltage	50 V
Rated impulse voltage	0.8 kV
Pollution degree	3
Insulation resistance	≥10^{10} Ω
Contact resistance	≤3 mΩ
Contact resistance, shielding	≤10 mΩ
Impedance	75 Ω
Limiting temperature	-40 ... +85 °C
Mating cycles	≥500
Material (insert)	Polycarbonate
Material (shielding)	Zinc die-cast, nickel-plated
Colour (insert)	RAL 7032 (pebble grey)
Material (contacts)	Copper alloy
Material flammability class acc. to UL 94	V-0

Technical characteristics

RoHS	compliant, compliant with exemption
RoHS exemptions	**6c:** Copper alloy containing up to 4 % lead by weight

Specifications and approvals

EN 60664-1
IEC 61984
UL 1977 ECBT2.E235076
CSA-C22.2 No. 182.3 ECBT8.E235076
DNV GL

Details

Crimping tools see chapter 90

Remarks on the crimp technique

The wire gauges mentioned in the catalogue refer to geometric wire gauges of cables.

Identification	Conductor cross-section (mm²)	Part number Male	Part number Female	Drawing (dimensions in mm)
Han-Modular® , Han-Quintax® module, Crimp termination 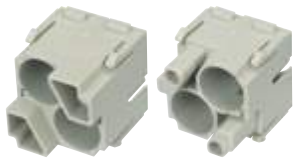		09 14 002 3001	09 14 002 3101	M F 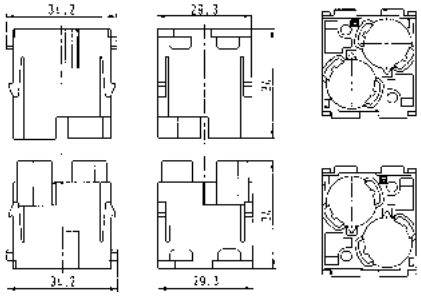 Contact arrangement (view from termination side)
Han® D Coax , Crimp termination, for Han D® crimp contacts  Please order crimp contacts separately.	0,14 ... 2,5	09 15 001 3013	09 15 001 3113	M F 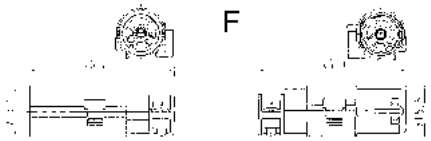 RF transmission characteristics 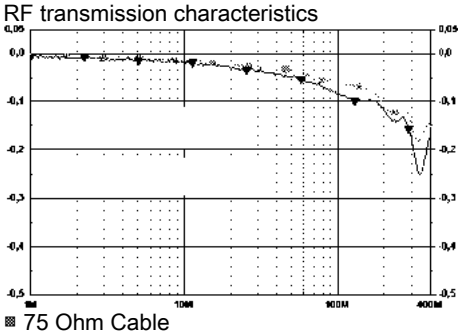 ▩ 75 Ohm Cable ▾ 75 Ohm Cable with Han D® Coax
Han D® , Crimp contact, Contact surface: Gold plated 	0,14 ... 0,37 0,5 0,75 1 1,5 2,5	09 15 000 6124 09 15 000 6123 09 15 000 6125 09 15 000 6122 09 15 000 6121 09 15 000 6126	09 15 000 6224 09 15 000 6223 09 15 000 6225 09 15 000 6222 09 15 000 6221 09 15 000 6226	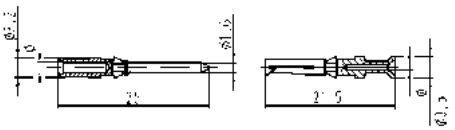 Wire gauge / ⌀ / Stripping length

Wire gauge		⌀	Stripping length
0.14-0.37 mm²	AWG 26-22	0.9 mm	8 mm
0.5 mm²	AWG 20	1.1 mm	8 mm
0.75 mm²	AWG 18	1.3 mm	8 mm
1 mm²	AWG 18	1.45 mm	8 mm
1.5 mm²	AWG 16	1.75 mm	8 mm
2.5 mm²	AWG 14	2.25 mm	6 mm

Technical characteristics

Number of contacts	1
Additional contacts	+ shielding
Electrical data acc. to IEC 61984	16 A 50 V 0,8 kV 3
Rated current	16 A
Rated voltage	50 V
Rated impulse voltage	0.8 kV
Pollution degree	3
Insulation resistance	≥10^{10} Ω
Contact resistance	≤1 mΩ
Contact resistance, shielding	≤10 mΩ
Impedance	50 Ω
Limiting temperature	-40 ... +85 °C
Mating cycles	≥500
Material (insert)	Polycarbonate
Material (shielding)	Zinc die-cast, nickel-plated
Colour (insert)	RAL 7032 (pebble grey)
Material (contacts)	Copper alloy
Material flammability class acc. to UL 94	V-0

Technical characteristics

RoHS	compliant, compliant with exemption
RoHS exemptions	**6c:** Copper alloy containing up to 4 % lead by weight

Specifications and approvals

EN 60664-1
IEC 61984
UL 1977 ECBT2.E235076
CSA-C22.2 No. 182.3 ECBT8.E235076
DNV GL

Details

Crimping tools see chapter 90

Remarks on the crimp technique

The wire gauges mentioned in the catalogue refer to geometric wire gauges of cables.

Identification	Conductor cross-section (mm²)	Part number Male	Part number Female	Drawing (dimensions in mm)
Han-Modular® , Han-Quintax® module, Crimp termination 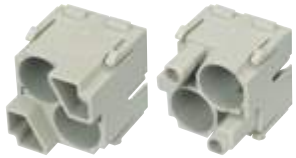		09 14 002 3001	09 14 002 3101	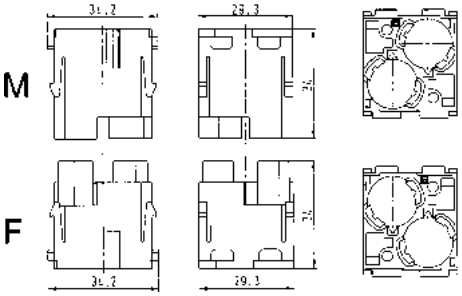 Contact arrangement (view from termination side)
Han® E Coax , Crimp termination, for Han E® crimp contacts  Please order crimp contacts separately.	0,14 ... 4	09 15 001 3023	09 15 001 3123	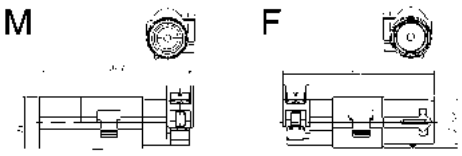 Han E® Coax with RG 213 cable (2.5 mm²): 200 MHz: Return loss [db] 23.8, Attenuation [db] 0:07; 500 MHz: 21.1, 0.11; 1.0 GHz: >18.7, 0.17; 1.2 GHz: >17.7, 0.2; 1.5 GHz: >16.4, <0.23; 2.0 GHz: >14.1, <0.53; 2.5 GHz: >12.0, <2.0
Han E® , Crimp contact, Contact surface: Gold plated 	0,14 ... 0,37 0,5 0,75 1 1,5 2,5 4	09 33 000 6117 09 33 000 6122 09 33 000 6115 09 33 000 6118 09 33 000 6116 09 33 000 6123 09 33 000 6119	09 33 000 6217 09 33 000 6222 09 33 000 6215 09 33 000 6218 09 33 000 6216 09 33 000 6223 09 33 000 6221	

Conductor cross-section		Identification
0.14-0.37 mm²	AWG 26-22	no groove
0.5 mm²	AWG 20	no groove
0.75 mm²	AWG 18	1 groove*
1 mm²	AWG 18	1 groove
1.5 mm²	AWG 16	2 grooves
2.5 mm²	AWG 14	3 grooves
3 mm²	AWG 12	wide groove
4 mm²	AWG 12	no groove
* on the back crimp collar		

Stripping length 7.5 mm

Number of contacts

4

1,5 A 50 V

Features

- Suitable for FOC and coaxial contacts acc. to EN 41626

Technical characteristics

Number of contacts	4
Electrical data acc. to IEC 61984	1,5 A 50 V
Rated current	1.5 A
Rated voltage	50 V
Insulation resistance	≥10^{10} Ω
Contact resistance	≤10 mΩ
Impedance	50 Ω, 75 Ω
Limiting temperature	-40 ... +125 °C
Mating cycles	≥500
Material (insert)	Polycarbonate
Colour (insert)	RAL 7032 (pebble grey)
Material (contacts)	Copper alloy
Material flammability class acc. to UL 94	V-0
RoHS	compliant, compliant with exemption
RoHS exemptions	**6c:** Copper alloy containing up to 4 % lead by weight

Specifications and approvals

EN 60664-1
IEC 61984
UL 1977 ECBT2.E235076
DNV GL

Details

ATTENTION when using coaxial contacts:

Male module 09 14 004 4501 with contacts 09 14 000 62xx or 09 69 28x 5xxx

Female module 09 14 004 4513 with contacts 09 14 000 61xx or 09 69 18x 5xxx

When removing the contacts, the two-piece module can be opened using a 7mm screwdriver. This destroys the module.

ATTENTION! Guide pins and bushes are prescribed (see chapter 80).

Assembly instructions

for coaxial contact

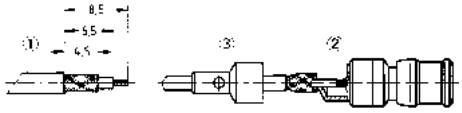

① Stripping length
② Solder termination (during soldering max. +300 °C for 2 s)
③ Crimp ferrule

Identification	Part number Male	Part number Female	Drawing (dimensions in mm)
Han-Modular® , Han® Multi module  Please order contacts separately.	09 14 004 4501	09 14 004 4512	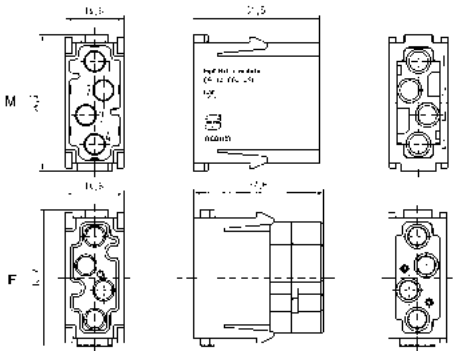 Contact arrangement (view from termination side)

Identification	Part number Male	Part number Female	Drawing (dimensions in mm)
DIN 41626 , Coaxial contact, Solder/crimp termination, for cables RG 174 U, 188 AU, 316 U , 50 Ohm, Contact surface: Gold plated 	09 14 000 6211	09 14 000 6111	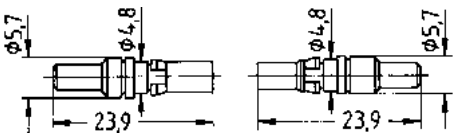
DIN 41626 , Coaxial contact, Solder/crimp termination, for cables RG 179 BU, 187 AU , 75 Ohm, Contact surface: Gold plated 	09 14 000 6221	09 14 000 6121	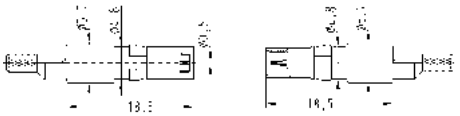 Wires / Shell Ø mm / Internal wire Ø mm / Dämpfung db/100 m bei 100MHz, 200MHz, 800MHz 50 Ω RG 174 / U: 2.5 / 0.48 / 84 RG 188 A / U: 2.6 / 0.54 / 29 / 40 RG 316 / U: 2.5 / 0.54 / 40 75 Ω RG 179 B / U: 2.55 / 0.3 / 41 RG 187 A / U: 2.7 / 0.3 / 41
DIN 41626 , FO contact, for 1 mm plastic fibre 	20 10 001 4211	20 10 001 4221	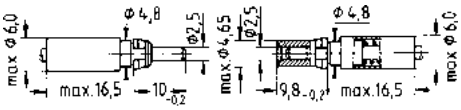
DIN 41626 , FO contact, for SI fibre (HCS®) 200/230 µm 	20 10 230 4211	20 10 230 4221	
DIN 41626 , FO contact, for GI fibre 50/125 µm for ceramic ferrule 62.5/125 µm 	20 10 125 4212	20 10 125 4222	

Number of contacts

4

1,5 A 50 V

Features

- Suitable for FOC and coaxial contacts acc. to D-Sub

Technical characteristics

Number of contacts	4
Electrical data acc. to IEC 61984	1,5 A 50 V
Rated current	1.5 A
Rated voltage	50 V
Insulation resistance	≥10^{10} Ω
Contact resistance	≤10 mΩ
Impedance	50 Ω, 75 Ω
Limiting temperature	-40 ... +125 °C
Mating cycles	≥500
Material (insert)	Polycarbonate
Colour (insert)	RAL 7032 (pebble grey)
Material (locking)	Copper alloy
Material (contacts)	Copper alloy, PBFE / PBTP / PI
Material flammability class acc. to UL 94	V-0
RoHS	compliant, compliant with exemption
RoHS exemptions	**6c:** Copper alloy containing up to 4 % lead by weight

Specifications and approvals

EN 60664-1
IEC 61984
UL 1977 ECBT2.E235076
DNV GL

Details

ATTENTION when using coaxial contacts:

Male module 09 14 004 4501 with contacts 09 14 000 62xx or 09 69 28x 5xxx

Female module 09 14 004 4513 with contacts 09 14 000 61xx or 09 69 18x 5xxx

When removing the contacts, the two-piece module can be opened using a 7mm screwdriver. This destroys the module.

ATTENTION! Guide pins and bushes are prescribed (see chapter 80).

Han® Multi module

Identification	Part number Male	Part number Female	Drawing (dimensions in mm)
Han-Modular® , Han® Multi module  Please order contacts separately.	09 14 004 4501	09 14 004 4513	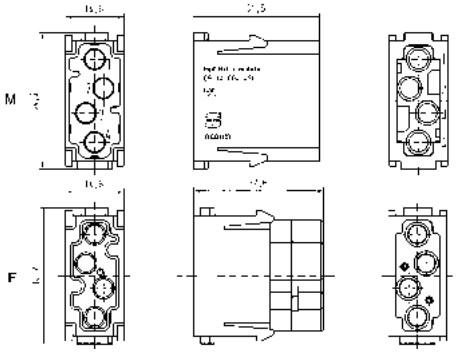 Contact arrangement (view from termination side) 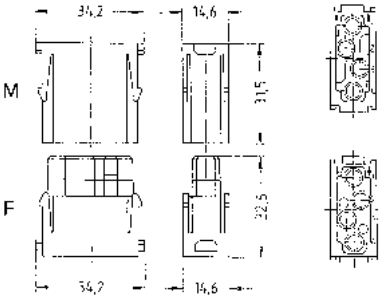 Contact arrangement (view from termination side)
D-Sub , Coaxial contact, Solder / solder termination, for cables RG 58 , 50 Ohm, Contact surface: Gold plated 	09 14 000 6215	09 14 000 6115	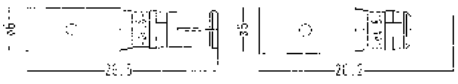
D-Sub , Mixed, Coaxial contact, Crimp/crimp termination, Straight Turned for cables RG 174 U, 188 AU, 316 U , 50 Ohm, Contact surface: Gold plated 	09 69 282 5140	09 69 182 5140	

Identification	Part number Male	Part number Female	Drawing (dimensions in mm)
D-Sub , Mixed, Coaxial contact, Crimp/crimp termination, Straight Turned for cables RG 179 BU, 187 AU , 75 Ohm, Contact surface: Gold plated 	09 69 282 5230	09 69 182 5230	
D-Sub , Mixed, Coaxial contact, Solder/crimp termination, Straight Turned for cables RG 174 U, 188 AU, 316 U , 50 Ohm, Contact surface: Gold plated 	09 69 281 5140	09 69 181 5140	
D-Sub , Mixed, Coaxial contact, Solder/crimp termination, Straight Turned for cables RG 178 BU, 196 AU, 404 U , 50 Ohm, Contact surface: Gold plated 	09 69 281 5141	09 69 181 5141	
D-Sub , Mixed, Coaxial contact, Solder/crimp termination, Straight Turned for cables RG 58 CU, 141 AU , 50 Ohm, Contact surface: Gold plated 	09 69 281 5143	09 69 181 5143	
D-Sub , Mixed, Coaxial contact, Solder/crimp termination, Straight Turned for cables RG 179 BU, 187 AU , 75 Ohm, Contact surface: Gold plated 	09 69 281 5230	09 69 181 5230	

Han® Multi module

Number of contacts

12

1,5 A 50 V

Features

- Suitable for FOC and coaxial contacts acc. to EN 41626

Technical characteristics

Number of contacts	12
Electrical data acc. to IEC 61984	1,5 A 50 V
Rated current	1.5 A
Rated voltage	50 V
Insulation resistance	≥10^{10} Ω
Contact resistance	≤10 mΩ
Impedance	50 Ω, 75 Ω
Limiting temperature	-40 ... +125 °C
Mating cycles	≥500
Material (insert)	Polycarbonate
Colour (insert)	RAL 7032 (pebble grey)
Material (contacts)	Copper alloy
Material flammability class acc. to UL 94	V-0
RoHS	compliant, compliant with exemption
RoHS exemptions	**6c:** Copper alloy containing up to 4 % lead by weight

Specifications and approvals

EN 60664-1
IEC 61984
UL 1977 ECBT2.E235076
DNV GL

Details

ATTENTION! Guide pins and bushes are prescribed (see chapter 80).

ATTENTION when using coaxial contacts:

Male module 09 14 004 4501 with contacts 09 14 000 62xx

Female module 09 14 004 4512 with contacts 09 14 000 61xx

Due to the closed entry design of female insert the upper part has to be removed by screw driver before extracting the contacts.

Assembly instructions

for coaxial contact

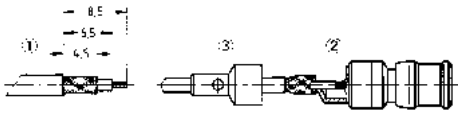

① Stripping length
② Solder termination (during soldering max. +300 °C for 2 s)
③ Crimp ferrule

Identification	Part number Male	Part number Female	Drawing (dimensions in mm)
Han-Modular® , Han® Multi module, acc. to DIN 41626  Please order contacts separately.	09 14 012 4501	09 14 012 4512	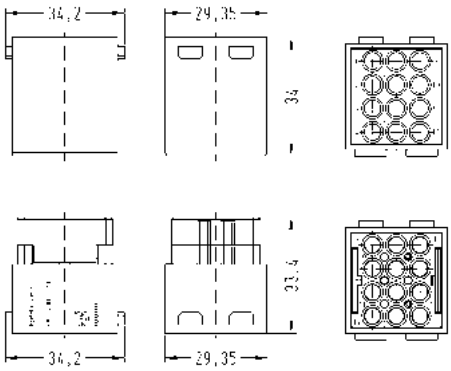 Contact arrangement (view from termination side)

Identification	Part number Male	Part number Female	Drawing (dimensions in mm)
DIN 41626 , Coaxial contact, Solder/crimp termination, for cables RG 174 U, 188 AU, 316 U , 50 Ohm, Contact surface: Gold plated 	09 14 000 6211	09 14 000 6111	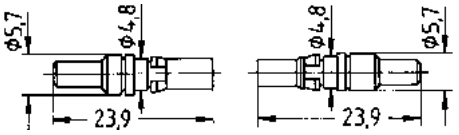
DIN 41626 , Coaxial contact, Solder/crimp termination, for cables RG 179 BU, 187 AU , 75 Ohm, Contact surface: Gold plated 	09 14 000 6221	09 14 000 6121	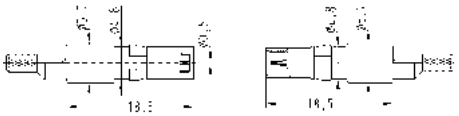 Wires / Shell ∅ mm / Internal wire ∅ mm / Dämpfung db/100 m bei 100MHz / 200MHz / 800MHz 50 Ω RG 174 / U: 2.5 / 0.48 / 84 RG 188 A / U: 2.6 / 0.54 / 29 / 40 RG 316 / U: 2.5 / 0.54 / 40 75 Ω RG 179 B / U: 2.55 / 0.3 / 41 RG 187 A / U: 2.7 / 0.3 / 41
DIN 41626 , FO contact, for 1 mm plastic fibre 	20 10 001 4211	20 10 001 4221	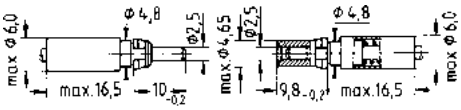
DIN 41626 , FO contact, for SI fibre (HCS®) 200/230 µm 	20 10 230 4211	20 10 230 4221	
DIN 41626 , FO contact, for GI fibre 50/125 µm for ceramic ferrule 62.5/125 µm 	20 10 125 4212	20 10 125 4222	

Han® Pneumatic module

Number of contacts

3



Features

- for the transmission of clean and dry compressed air
- Female contacts with / without shut-off

Technical characteristics

Number of contacts	3
Limiting temperature	-40 ... +85 °C, -20 ... +85 °C
Mating cycles	≥10000
Tube inner diameter	3 mm, 4 mm, 6 mm
Tube outer diameter	3 mm, 4 mm, 6 mm
Material (insert)	Polycarbonate
Colour (insert)	Blue
Material (seal)	NBR
Material (contacts)	Brass
Material flammability class acc. to UL 94	V-0
RoHS	compliant, compliant with exemption
RoHS exemptions	**6c:** Copper alloy containing up to 4 % lead by weight

Specifications and approvals

IEC 61984
EN 60664-1

Identification		Part number Male	Part number Female	Drawing (dimensions in mm)
Han-Modular® , Han® Pneumatic module  Please order contacts separately.		09 14 003 3501	09 14 003 3501	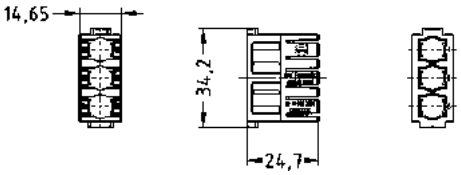 Contact arrangement (view from mating side)
Pneumatic contact, Without shut-off Straight , Tube outer diameter 	3 mm 4 mm 6 mm	09 14 000 6353 09 14 000 6354 09 14 000 6356	09 14 000 6453 09 14 000 6454 09 14 000 6456	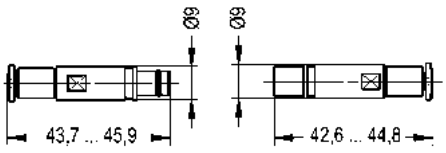
Pneumatic contact, Without shut-off Angled , Tube outer diameter 	3 mm 4 mm 6 mm	09 14 000 7353 09 14 000 7354 09 14 000 7356	09 14 000 7453 09 14 000 7454 09 14 000 7456	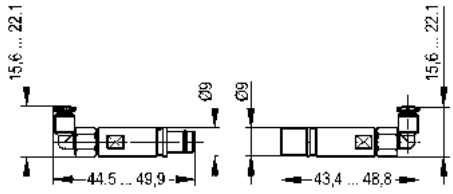

Identification		Part number Male	Part number Female	Drawing (dimensions in mm)
Pneumatic contact, With shut-off Straight , Tube outer diameter 	3 mm 4 mm 6 mm		09 14 000 6463 09 14 000 6464 09 14 000 6466	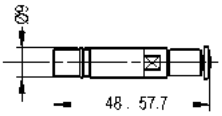
Pneumatic contact, With shut-off Angled , Tube outer diameter 	3 mm 4 mm 6 mm		09 14 000 7463 09 14 000 7464 09 14 000 7466	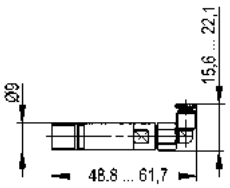
Pneumatic contact, Without shut-off Straight , Tube inner diameter 	3 mm 4 mm 6 mm	09 14 000 6303 09 14 000 6304 09 14 000 6306	09 14 000 6403 09 14 000 6404 09 14 000 6406	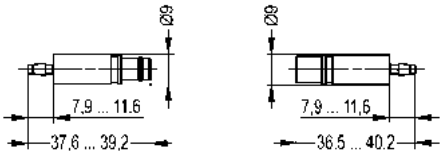
Pneumatic contact, With shut-off Straight , Tube inner diameter 	3 mm 4 mm 6 mm		09 14 000 6413 09 14 000 6414 09 14 000 6416	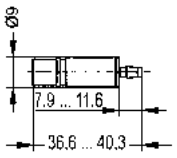

Features

- Suitable for HARTING SC contacts
- for GI-Fibre 50 - 62,5 / 125µm
- Insertion loss < 0.5 dB

Technical characteristics

Number of contacts	4
Limiting temperature	-40 ... +85 °C
Mating cycles	≥500
Material (insert)	Polycarbonate
Colour (insert)	RAL 7032 (pebble grey)
Material flammability class acc. to UL 94	V-0
RoHS	compliant, compliant with exemption
RoHS exemptions	**6c:** Copper alloy containing up to 4 % lead by weight

Specifications and approvals

UL 1977 ECBT2.E235076
DNV GL

Details

The male and female modules each use the same contacts.

Guide pins and bushes are recommended (see chapter 80).

Details

Assembly instructions

Male module

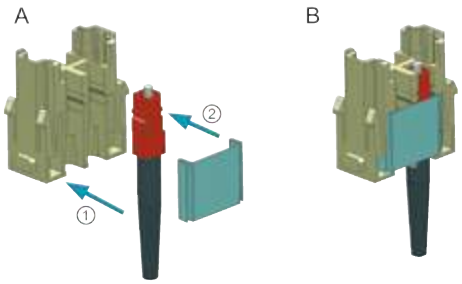

A) Assemble the SC contact
Push the SC contact from the side into the relevant insert ①
Push the fixing plate from the side over the contacts ②
B) SC contact fixed in the module

Assembly instructions

Female module

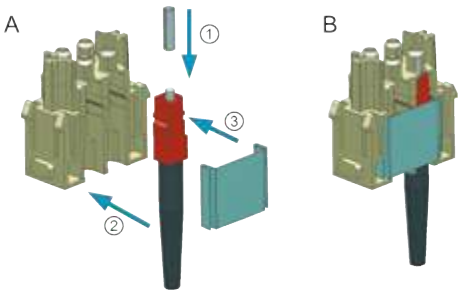

A) Assemble the SC contact
Push the centering ferrule (included in delivery) on the SC contact ①
Push the SC contact from the side into the relevant insert ②
Push the fixing plate from the side over the contacts ③
B) SC contact fixed in the module

Han® SC module

Number of contacts

4

Identification	Part number Male	Part number Female	Drawing (dimensions in mm)
Han-Modular® , Han® SC module 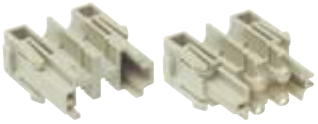 Please order contacts separately.	09 14 004 4701	09 14 004 4712	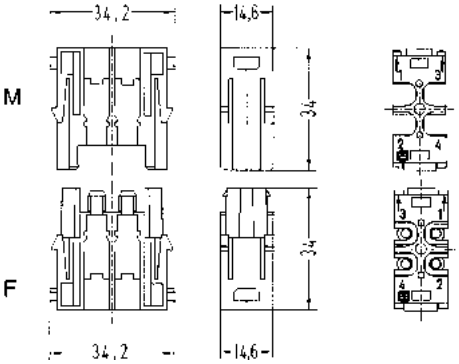 Contact arrangement (view from termination side)
Han-Modular® , Han® SC module, with ceramic ferrule 62.5/125 µm  Please order contacts separately.		09 14 004 4711	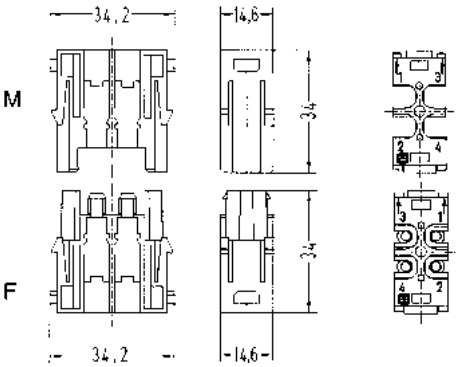 Contact arrangement (view from termination side)
Han-Modular® , Han® SC module, with metal ferrule  Please order contacts separately.		09 14 004 4713	
SC contact, for 1 mm plastic fibre Crimp termination 	20 10 001 5211		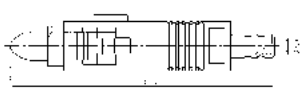

Han® SC module

Identification	Part number Male	Part number Female	Drawing (dimensions in mm)
SC contact, for 1 mm plastic fibre Fast termination 	20 10 001 5217		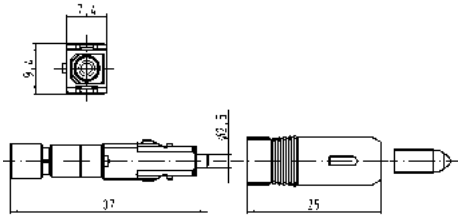
SC contact, for GI fibre 50/125 µm for ceramic ferrule 62.5/125 µm 	20 10 125 5211		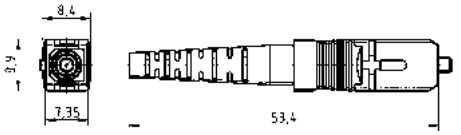
SC contact, for SI fibre (HCS®) 200/230 µm	20 10 230 5211		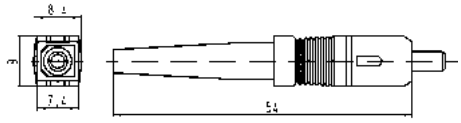
Han-Modular® , Fixing plate, for SC module 	09 14 000 9965	09 14 000 9965	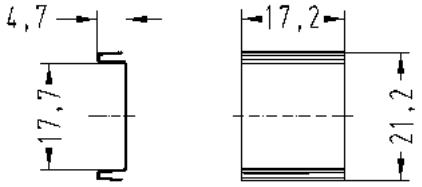

Features

- Suitable for HARTING LC contacts
- for GI-Fibre 50 - 62.5 / 125 µm and for singlemode fibre

Technical characteristics

Number of contacts	6
Limiting temperature	-40 ... +85 °C
Mating cycles	≥500
Material (insert)	Polycarbonate
Colour (insert)	RAL 7032 (pebble grey)
Material flammability class acc. to UL 94	V-0
RoHS	compliant, compliant with exemption
RoHS exemptions	**6b:** Lead as an alloying element in aluminium containing up to 0,4 % lead by weight

Details

The male and female modules each use the same contacts.

ATTENTION! Guide pins and bushes are prescribed (see chapter 80).

Han® LC module

Number of contacts

6

Identification	Part number Male	Part number Female	Drawing (dimensions in mm)
Han-Modular® , Han® LC module  Please order contacts separately.	09 14 006 4701	09 14 006 4711	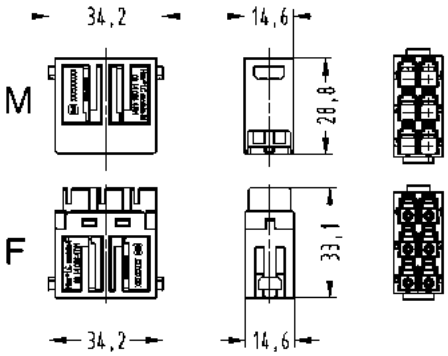 Contact arrangement (view from termination side)
LC contact, Singlemode for wire gauge up to 2 mm 	20 10 125 8221		
LC contact, Singlemode for wire gauge up to 3 mm 	20 10 125 8220		
LC contact, Multimode for wire gauge up to 2 mm 	20 10 125 8212		
LC contact, Multimode for wire gauge up to 3 mm 	20 10 125 8211		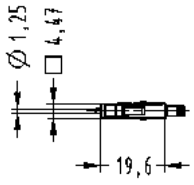

Features

- Single module with standard shielded RJ45 plug and jack
- The RJ45 inserts are protected by a reliable plastic insulator
- Patch cables are assembled/removed without tools
- Auto-crossing
- Auto-negotiation
- Auto-polarity
- Store and Forward
- Fast Ethernet
- Full Gigabit Ethernet
- Non blocking
- Support of Jumbo-Frames (10 kBytes)
- Energy Efficient Ethernet acc. to IEEE 802.3az

Technical characteristics

Total number of ports	4
Insulation resistance	≥10^{10} Ω
Limiting temperature	-40 ... +125 °C
Operating temperature	0 ... +60 °C
Storage temperature	-40 ... +85 °C
Mating cycles	≥500
Degree of protection acc. to IEC 60529	IP30, when mated
Nominal voltage	24 V DC
Transmission characteristics	Cat. 5, Class D up to 100 MHz
Data rate	10 Mbit/s, 100 Mbit/s, 1 Gbit/s
Diagnostic display	Connection (Link), Data transfer (Act), Data transfer rate, Power connection
Material (insert)	Polycarbonate
Colour (insert)	RAL 7032 (pebble grey)
Material flammability class acc. to UL 94	V-0
RoHS	compliant

Specifications and approvals

EN 60664-1
IEC 61984
DNV GL
EN 55022
Radio disturbance characteristics
EN 61000-4-2
Electrostatic discharge (ESD)
EN 61000-4-3
Electromagnetic field
EN 61000-4-4
Rapid transients (burst)
EN 61000-4-5
Surge voltages
EN 61000-4-6
conducted disturbances
EN 61000-6-4
emission standard
IEC 60068-2-6
Vibration (sinusoidal)
IEC 60068-2-27
Shock
IEEE 802.3



Identification	Part number Male	Part number Female	Drawing (dimensions in mm)
Han-Modular® , Han® RJ45 module, Single module 	09 14 001 4623		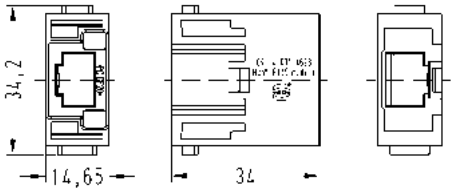
Han-Modular® , Han® RJ45 module, Adapter, for patch cable 	09 14 000 9966		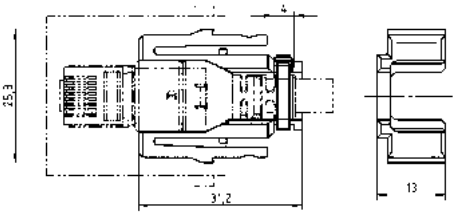
Han-Modular® , Han-Smart, Switch US4 		09 80 113 0400	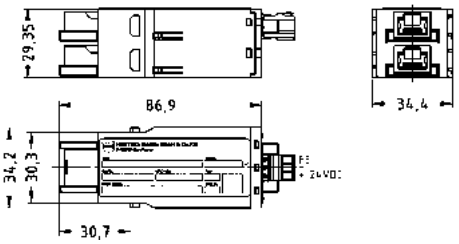

Han-Smart ID CAN module

Number of contacts

7



Features

- Module for identifying industrial components
- Programming via the CANopen communication protocol
- Automatically detects baud rate
- Node ID configuration using LSS, acc. to DS305
- Status and diagnostics display
- Default Node ID: 127

Technical characteristics

Number of contacts	7
Operating temperature	-40 ... +70 °C
Storage temperature	-40 ... +70 °C
Mating cycles	≥500
Degree of protection acc. to IEC 60529	IP30
Nominal voltage	24 V DC
Power consumption	<5 W
Memory	10 MB Flash
Material (insert)	Polycarbonate
Colour (insert)	RAL 7032 (pebble grey)
Material (contacts)	Copper alloy
Material (accessories)	Polycarbonate
Material flammability class acc. to UL 94	V-0
RoHS	compliant

Specifications and approvals

DIN EN 60721-3-3
DIN EN 50102
EN 61000-4-2
Electrostatic discharge (ESD)
EN 61000-4-3
Electromagnetic field
EN 61000-4-4
Rapid transients (burst)
EN 61000-4-5
Surge voltages
EN 61000-4-6
conducted disturbances

Identification	Part number Male	Part number Female	Drawing (dimensions in mm)
Han-Modular® , Han-Smart, ID CAN, Memory module, Contact surface: Gold plated 	09 80 015 0100		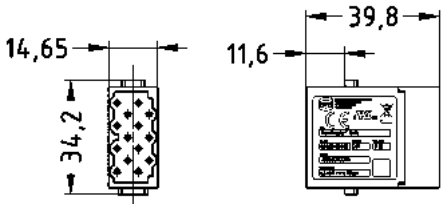
Han-Modular® , Han-Smart, ID CAN, Network module, Cage-clamp termination, Contact surface: Gold plated 		09 80 115 0200	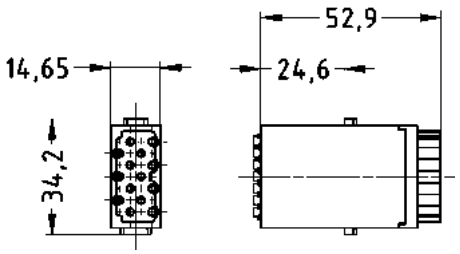

Han-Smart ID CAN module

Identification	Part number Male	Part number Female	Drawing (dimensions in mm)
Han-Modular® , Update module, to update the male module 		09 80 115 0201	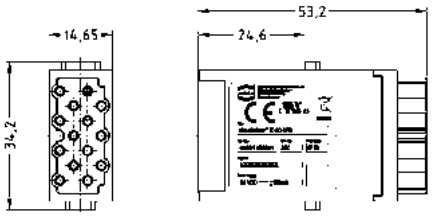

Han-Smart Surge protection module

Modu-
lar

Number of contacts

5



Features

- Surge protection for two pairs of balanced signals
- Protects symmetric signals interfaces with electrical isolation

Technical characteristics

Number of contacts	5
Operating temperature	-40 ... +85 °C
Storage temperature	-40 ... +85 °C
Mating cycles	≥500
Degree of protection acc. to IEC 60529	IP20
Nominal current	0.5 A
Nominal voltage	24 V DC, 24 V AC
Material (insert)	Polyamide
Colour (insert)	RAL 7032 (pebble grey)
Material flammability class acc. to UL 94	V-0

Details

The surge protection module protects up to 2 pairs of balanced signal interfaces with electrical isolation against lightning strikes or overvoltage events.

Preferred field of application is the protection of analogue signal interfaces like for 0/4-20 mA or differential signals.

The equipotential bonding will be led via the earthed hinged frame of the Han-Modular® system.

Han-Smart Surge protection module

Identification	Conductor cross-section (mm^2)	Part number Male	Part number Female	Drawing (dimensions in mm)
Han-Modular® , Han-Smart, Han-Smart Surge protection module, Two channels, Differential mode without common refence potential, Push-in-spring-cage termination 	0,25 ... 1,5	09 80 000 0100	09 80 003 0200	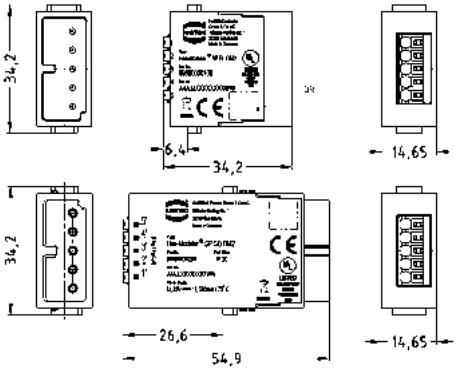 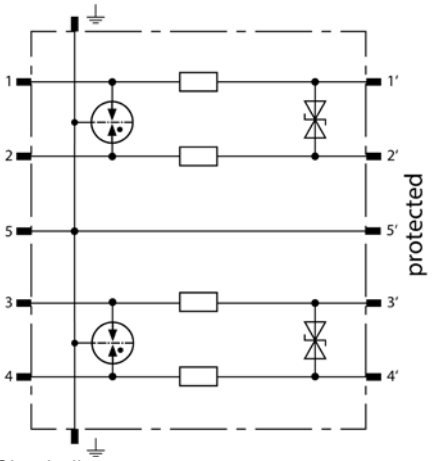 Circuit diagram

Han-Smart Surge protection module

Number of contacts

5



Features

- Surge protection for four single lines
- Protects signals with common reference potential

Technical characteristics

Number of contacts	5
Operating temperature	-40 ... +85 °C
Storage temperature	-40 ... +85 °C
Mating cycles	≥500
Degree of protection acc. to IEC 60529	IP20
Nominal current	0.5 A
Nominal voltage	24 V DC
Material (insert)	Polyamide
Colour (insert)	RAL 7032 (pebble grey)
Material flammability class acc. to UL 94	V-0

Details

The surge protection module protects up to 4 single lines with common reference potential and unbalanced interfaces against lightning strikes or overvoltages.

Preferred field of application is the protection of digital signals up to 24 VDC with a max load of 0.5 A / line.

The equipotential bonding will be led via the earthed hinged frame of the Han-Modular® system.

Han-Smart Surge protection module

Identification	Conductor cross-section (mm^2)	Part number Male	Part number Female	Drawing (dimensions in mm)
Han-Modular® , Han-Smart, Han-Smart Surge protection module, Four channels, Common reference potential, Push-in-spring-cage termination 	0,25 ... 1,5	09 80 000 0101	09 80 003 0201	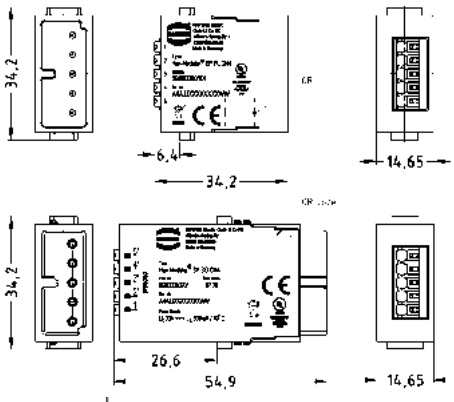 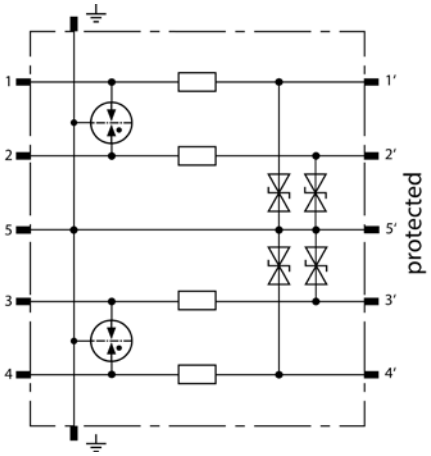 Circuit diagram

Features

- Robust housing
- Compact design saves space
- Modular structure increases flexibility
- Simple and quick assembly
- Two-part hood

Technical characteristics

Limiting temperature	-40 ... +125 °C
Mating cycles	≥500
Degree of protection acc. to IEC 60529	IP65, in locked position
Material (hood/housing)	Zinc die-cast
Surface (hood/housing)	Nickel plated
Material (seal)	NBR
Material (locking)	Stainless steel
Material (accessories)	Metal
RoHS	compliant

Details

Conductor cross-section PE 0.5 ... 10 mm²

Details

Conductor cross-section 10 mm² only with ferrule crimping tool 09 99 000 0374

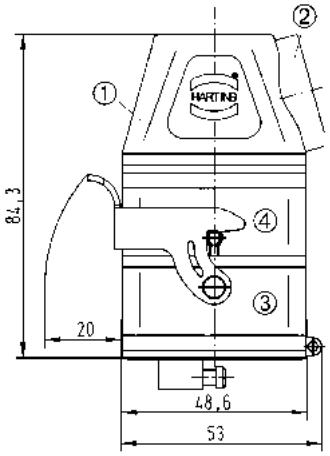

① Hood with side entry
② Cable entry M25
③ Bulkhead mounted housing with locking lever
④ Carrier hood

Single locking lever

Identification	Cable entry	Part number	Drawing (dimensions in mm)
Han-Modular® Compact , Hoods, Top entry, Pack contents: 4 screws are included within the delivery 	1x M25 1x M32	19 14 001 0401 19 14 001 0402	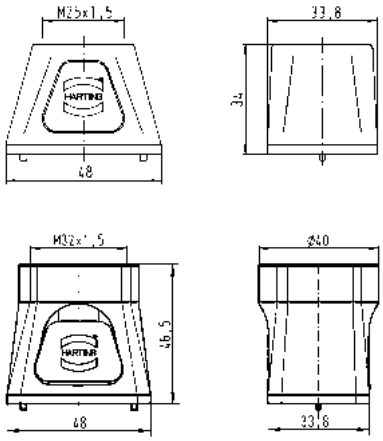
Han-Modular® Compact , Hoods, Side entry, Pack contents: 4 screws are included within the delivery 	1x M25	19 14 001 0501	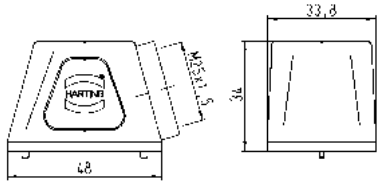
Han-Modular® Compact , Carrier hood 		09 14 001 0311	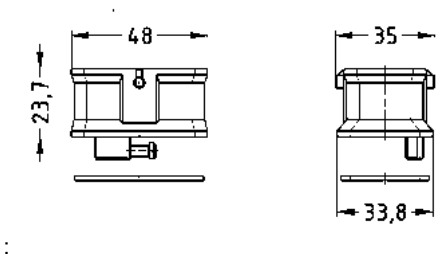
Han-Modular® Compact , Protection cover, for carrier hoods, Thermoplastic 		09 14 001 5402	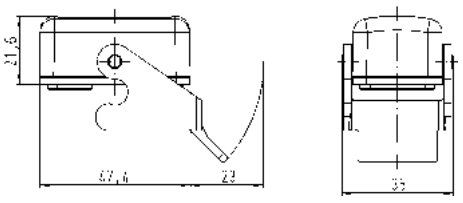

Single locking lever

Identification	Part number	Drawing (dimensions in mm)
Han-Modular® Compact , Bulkhead mounted housings 	09 14 001 0301	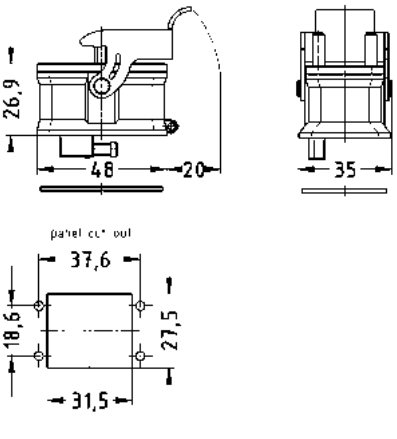
Han-Modular® Compact , Protection cover, for bulkhead mounted housings, Thermoplastic 	09 14 001 5401	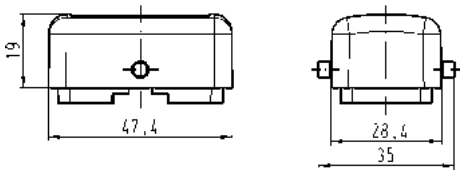
Fixing bracket 	09 14 000 9947	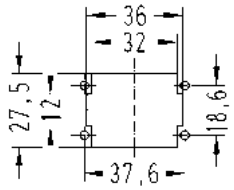 Panel cut out

Technical characteristics

Material (accessories)	Polycarbonate

Technical characteristics

Colour (accessories)	Red, Blue, Black, Yellow
RoHS	compliant

Identification	Part number	Drawing (dimensions in mm)
Coding element, Red 	09 14 000 9971	
Coding element, Blue 	09 14 000 9972	
Coding element, Black 	09 14 000 9973	
Coding element, Yellow 	09 14 000 9974	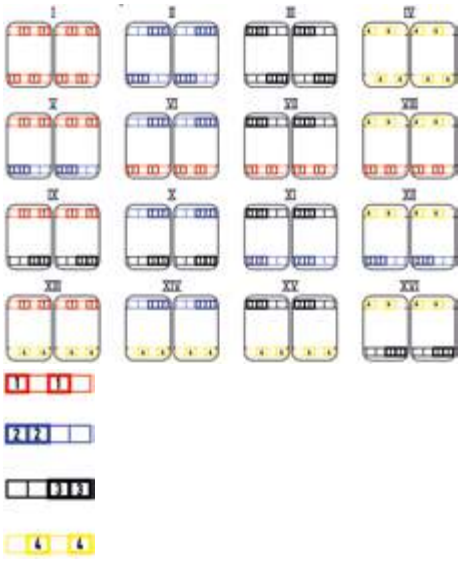

Features

- Robust housing
- Compact design saves space
- Modular structure increases flexibility
- Simple and quick assembly
- Two-part hood

Technical characteristics

Limiting temperature	-40 ... +125 °C
Mating cycles	≥500
Degree of protection acc. to IEC 60529	IP65
Material (hood/housing)	Aluminium die-cast, Zinc die-cast
Surface (hood/housing)	Powder-coated
Colour (hood/housing)	RAL 7037 (dust grey)
Material (seal)	NBR
Material (locking)	Polycarbonate, Stainless steel
Colour (locking)	RAL 7037 (dust grey)
Material (accessories)	Zinc die-cast
Material flammability class acc. to UL 94 (locking levers)	V-0
RoHS	compliant, compliant with exemption
RoHS exemptions	**6c:** Copper alloy containing up to 4 % lead by weight

Details

Conductor cross-section PE 0.5 ... 10 mm²

Conductor cross-section 10 mm² only with ferrule crimping tool 09 99 000 0374

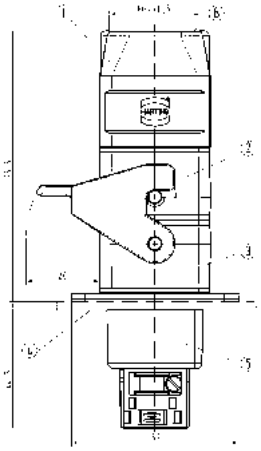

① Hood with top entry
② Carrier hood
③ Bulkhead mounted housing with locking lever
④ Switch board panel
⑤ Panel feed through housings
⑥ Cable entry

Single locking lever



Identification	Cable entry	Part number	Drawing (dimensions in mm)
Han-Modular® Twin , Hoods, Top entry 	1x M20 1x M25 1x M32	19 14 002 0400 19 14 002 0401 19 14 002 0402	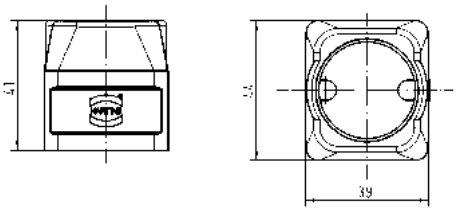
Han-Modular® Twin , Hoods, Side entry 	1x M25	19 14 002 0501	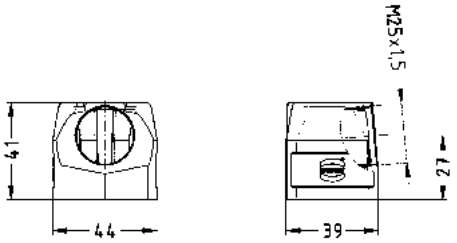
Han-Modular® Twin , Carrier hood 		09 14 002 0311	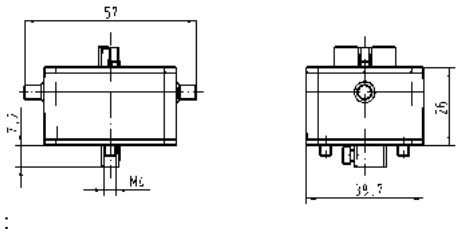
Han-Modular® Twin , Angled housing, Zinc die-cast 	1x M32	09 14 002 0950 19 14 002 0952	
Shielded frame 		09 14 000 9924	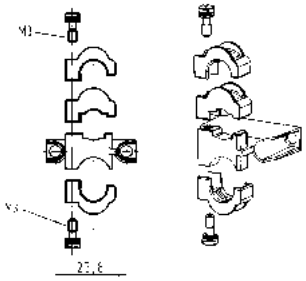

Single locking lever



Identification	Part number	Drawing (dimensions in mm)
Han-Modular® Twin , Bulkhead mounted housings, Han-Easy Lock® 	09 14 002 0301	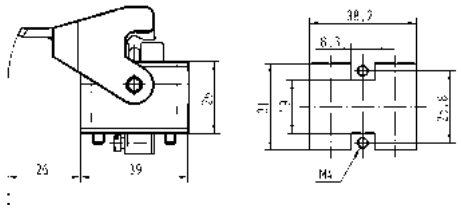
Han-Modular® Twin , Panel feed through housing, Zinc die-cast 	09 14 000 9928	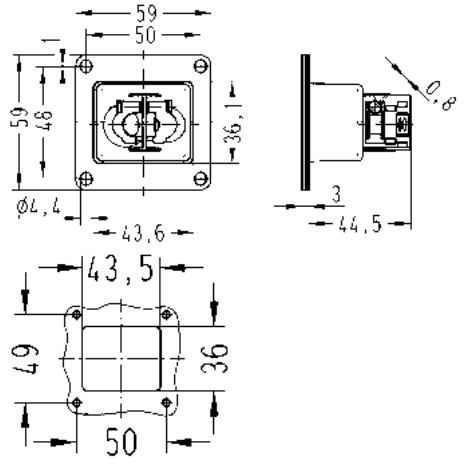 Panel cut out
Han-Modular® Twin , Protection cover, for bulkhead mounted housings, Metal 	09 14 002 5401	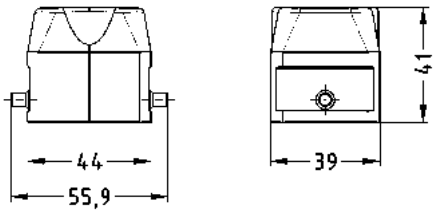

Features

- Suitable for all Han-Modular® single modules
- The variant with PE connection uses pin 1 of the module as PE
- Slim, space saving construction type
- Low cost plastic hoods and housings

Technical characteristics

Limiting temperature	-40 ... +85 °C
Mating cycles	≥500
Degree of protection acc. to IEC 60529	IP65, IP20
Material (hood/housing)	Polycarbonate
Colour (hood/housing)	RAL 7032 (pebble grey)
Material (seal)	NBR
Material (accessories)	Polycarbonate
Material flammability class acc. to UL 94	V-0
RoHS	compliant

Specifications and approvals

EN 60664-1
IEC 61984

Snap-in latches

Identification	Cable entry	Cable diameter (mm)	Part number	Drawing (dimensions in mm)
Han-Modular® ECO , Hoods, With integrated cable gland, Top entry, IP65 	1x Integrated	6 ... 13	09 14 001 0420	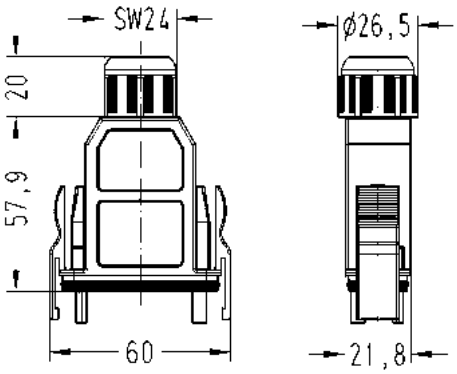 Tightening torque Cable gland 3 Nm
Han-Modular® ECO , Hoods, Top entry, IP20 	1x	3 ... 14,5	09 14 001 0422	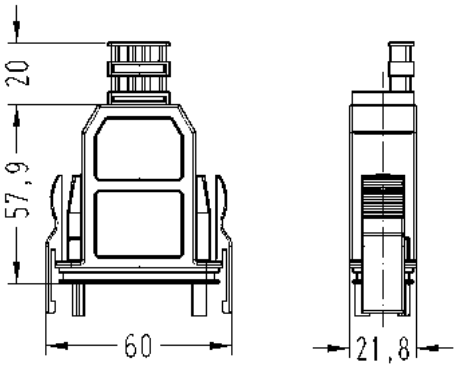
Han-Modular® ECO , Bulkhead mounted housings 			09 14 001 0320	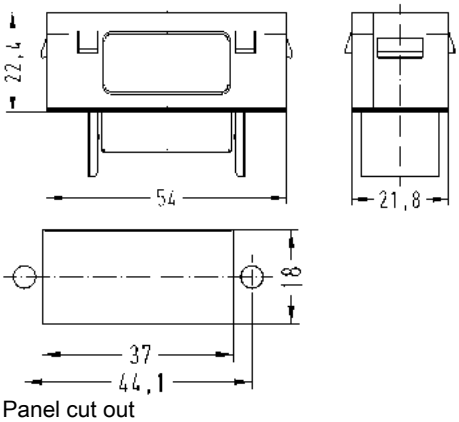 Panel cut out

Identification	Cable entry	Cable diameter (mm)	Part number	Drawing (dimensions in mm)
Han-Modular® ECO , Cable to cable housing, With integrated cable gland, Top entry, IP65 	1x Integrated	6 ... 13	09 14 001 0720	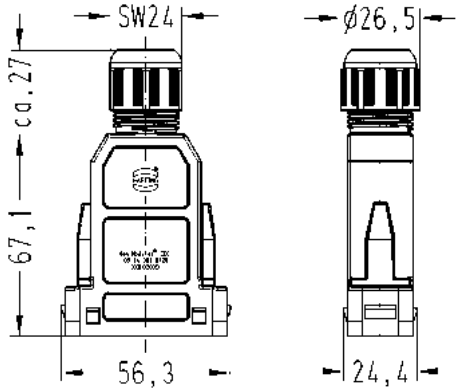 Tightening torque Cable gland 3 Nm
Han-Modular® ECO , Cable to cable housing, Top entry, IP20 	1x	3 ... 14,5	09 14 001 0722	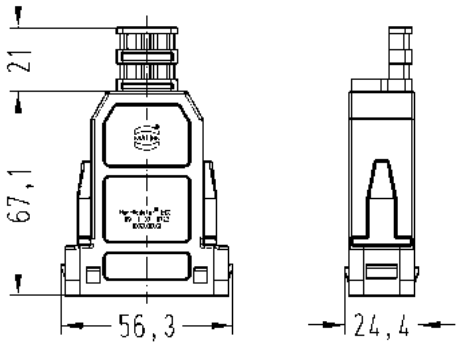
Han-Modular® , Coding element, Pack contents: 8 pieces per frame 			09 14 000 9929	

Snap-in latches

Identification	Cable entry	Cable diameter (mm)	Part number	Drawing (dimensions in mm)
Han-Modular® ECO , Hoods, With PE identification (pin 1 = PE), With integrated cable gland, Top entry, IP65 	1x Integrated	6 ... 13	09 14 001 0421	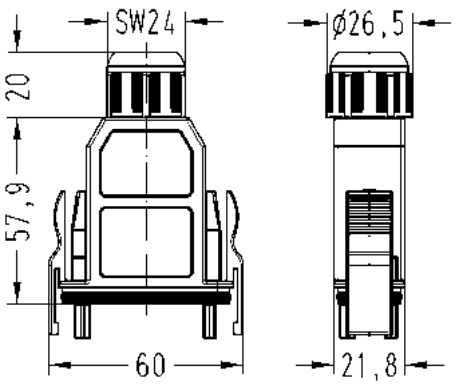 Tightening torque Cable gland 3 Nm
Han-Modular® ECO , Hoods, With PE identification (pin 1 = PE), Top entry, IP20 	1x	3 ... 14,5	09 14 001 0423	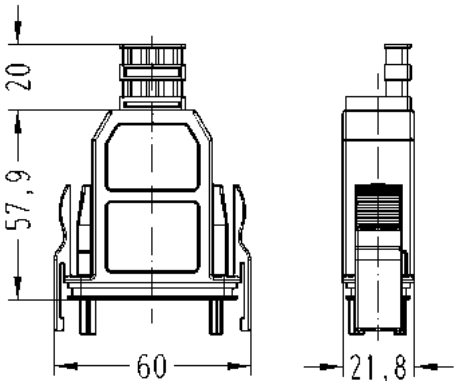
Han-Modular® ECO , Bulkhead mounted housings, With PE identification (pin 1 = PE) 			09 14 001 0321	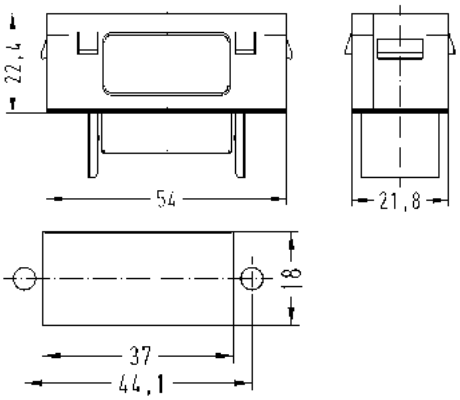 Panel cut out

Identification	Cable entry	Cable diameter (mm)	Part number	Drawing (dimensions in mm)
Han-Modular® ECO , Cable to cable housing, With PE identification (pin 1 = PE), With integrated cable gland, Top entry, IP65 	1x Integrated	6 ... 13	09 14 001 0721	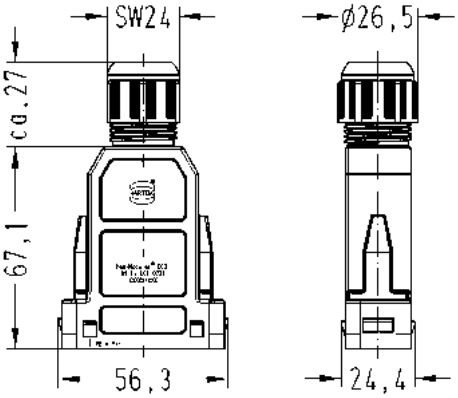 Tightening torque Cable gland 3 Nm
Han-Modular® ECO , Cable to cable housing, With PE identification (pin 1 = PE), Top entry, IP20 	1x	3 ... 14,5	09 14 001 0723	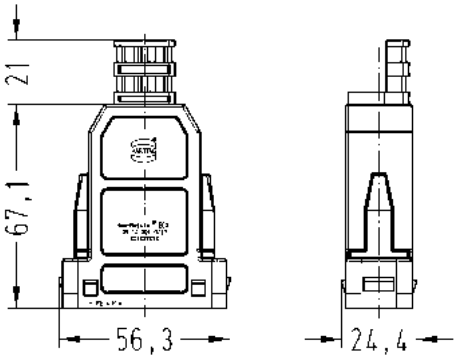
Han-Modular® , Coding element, Pack contents: 8 pieces per frame 			09 14 000 9929	

Han-Modular® docking frames

Features

- Blind mating connector system for drawer systems
- Highest flexibility due to a product range of over 100 connector modules
- Direct panel mounting without hoods and housings
- Leading centring system compensates for tolerances of +/- 2 mm
- Compatible with HMC components for 10,000 mating cycles

Technical characteristics

Limiting temperature	-40 ... +125 °C
Mating cycles	≥500
Mating cycles with other HMC components	≥10000
Degree of protection acc. to IEC 60529	IP20
Lock-in range	±4 mm
Material (frames)	Polycarbonate
Material (accessories)	Zinc die-cast
Material flammability class acc. to UL 94	V-0
RoHS	compliant

Specifications and approvals

EN 60664-1
IEC 61984

Details

The docking frame has no PE contact as it is not required in many drawer system applications.

Identification	Part number	Drawing (dimensions in mm)
Han-Modular® , Docking frame, Float mount, for 2 modules, A ... B 	09 14 006 1701	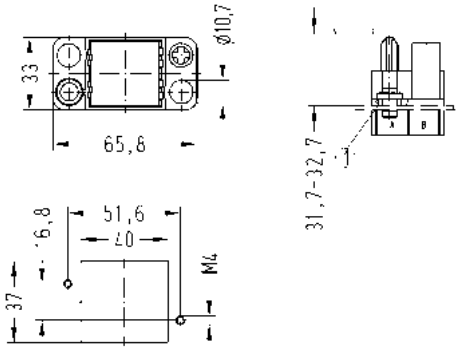 ① Floating tolerance ± 2 mm Panel cut out

Han-Modular® docking frames

Identification	Part number	Drawing (dimensions in mm)
Han-Modular® , Docking frame, Fixed, for 2 modules, a ... b 	09 14 006 1711	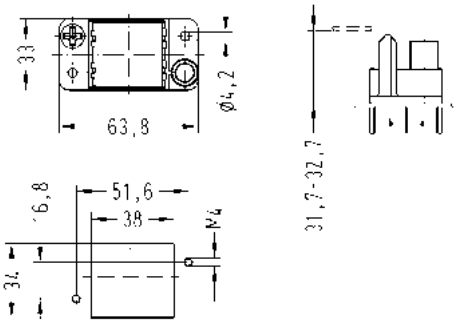 Panel cut out
Han-Modular® , Docking frame, Float mount, for 3 modules, A ... C 	09 14 010 1701	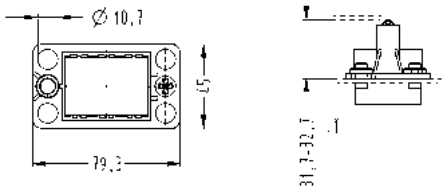 ① Floating tolerance ± 2 mm
Han-Modular® , Docking frame, Fixed, for 3 modules, a ... c 	09 14 010 1711	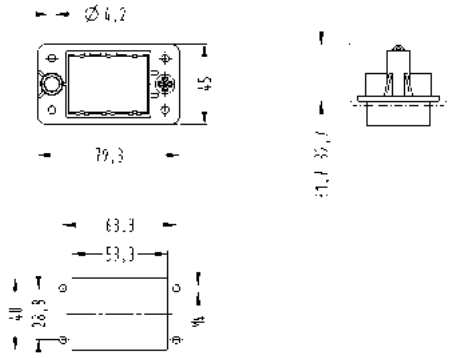 Panel cut out
Han-Modular® , Docking frame, Float mount, for 4 modules, A ... D 	09 14 016 1701	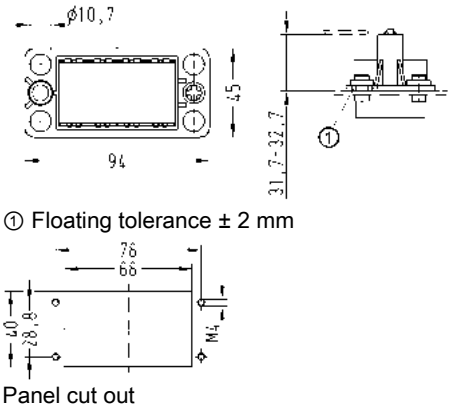 ① Floating tolerance ± 2 mm Panel cut out

Han-Modular® docking frames

Identification	Part number	Drawing (dimensions in mm)
Han-Modular® , Docking frame, Fixed, for 4 modules, a ... d 	09 14 016 1711	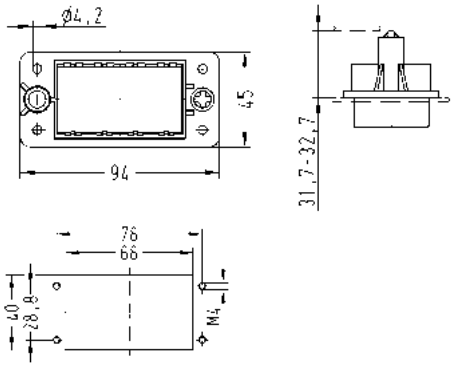 Panel cut out
Han-Modular® , Docking frame, Float mount, for 6 modules, A ... F 	09 14 024 1701	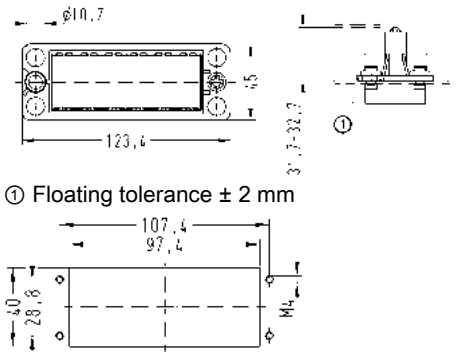 ① Floating tolerance ± 2 mm Panel cut out
Han-Modular® , Docking frame, Fixed, for 6 modules, a ... f 	09 14 024 1711	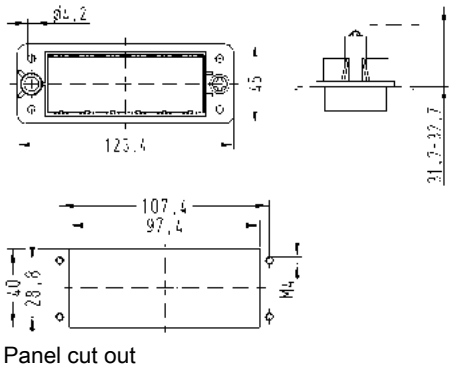 Panel cut out
Han-Modular® , Float washer To enable the frame to be float mounted using standard M4 fixing screws	09 14 000 9936	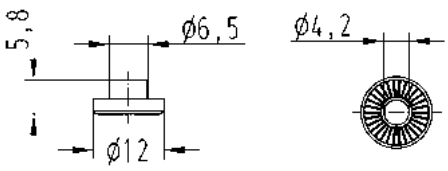

Sliding frame

Features

- Blind mating connector system for drawer systems with test position
- Direct panel mounting without hoods and housings
- Solid leading guide pins and bushes
- Suitable for many modules of the Han-Modular® product series (Please contact your HARTING salesman for support to find your specific combination.)

Technical characteristics

Limiting temperature	-5 ... +55 °C
Mating cycles	≥500
Lock-in range	±4 mm
Material (frames)	Polycarbonate
Material (accessories)	Zinc die-cast
Material flammability class acc. to UL 94	V-0
RoHS	compliant

Specifications and approvals

EN 60664-1
IEC 61984

Details

Due the plastic material used in the docking frame without PE, the panel will need to be grounded separately.

Details





Position unmated
The drawer system and the modules are not mated.



Test position
The drawer system is in the so called test position – the modules are mated.



Working position
The drawer system is pushed completely into the rack – the modules remain mated.

Sliding frame

Size 16 B

Identification	Part number	Drawing (dimensions in mm)
Sliding frame, with test position, for 4 modules, Float mount, A ... D 	09 14 016 1721	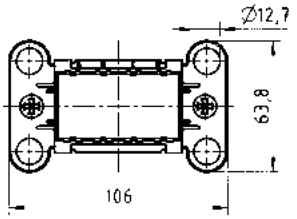
Sliding frame, with test position, for 4 modules, Movable side, a ... d 	09 14 016 1731	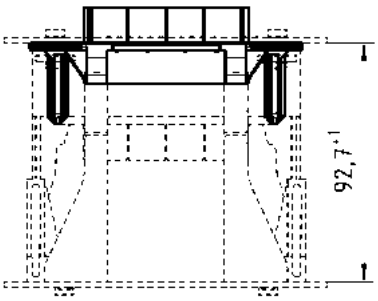
Han-Modular® , Float washer To enable the frame to be float mounted using standard M4 fixing screws	09 14 000 9986	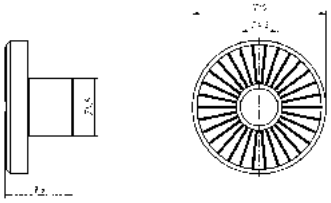
Rail guide, for sliding frames for movable side 	09 14 000 9987	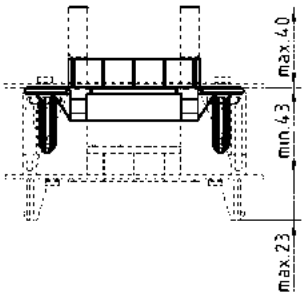

Technical characteristics

Material (insert)	Polycarbonate
Colour (insert)	RAL 7032 (pebble grey)
Material (locking)	Polycarbonate

Technical characteristics

Material (accessories)	Thermoplastic
Material flammability class acc. to UL 94	V-0
RoHS	compliant

Identification	Part number	Drawing (dimensions in mm)
Han-Modular® , Han® Dummy module 	09 14 000 9950	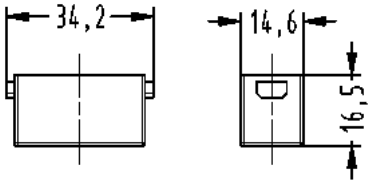
Han-Modular® , Module locking system, With strain relief, Pack contents: 1 module locking system 	09 14 000 0312	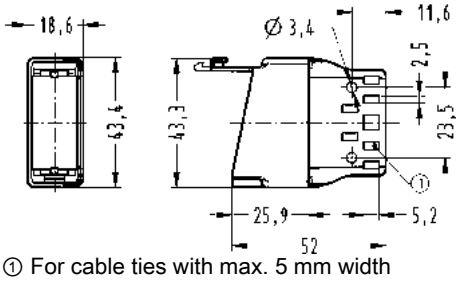 ① For cable ties with max. 5 mm width
Han-Modular® , Module locking system, for rail, Pack contents: 1 module locking system 	09 14 000 0313	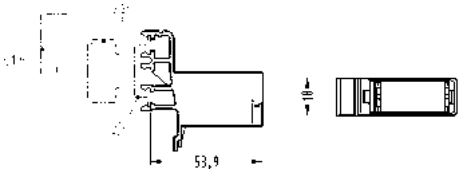 ① G-rail IEC 60715-G32 ② Rail IEC 60715-35 x 7.5 with 1 mm thick-ness or -35 x 15 with 1.5 mm thickness ③ C-rail IEC 60715-C30
Han-Modular® , Fixing, for Han-Modular® hinged frames, Pack contents: 20 pieces per frame 	09 14 000 9960	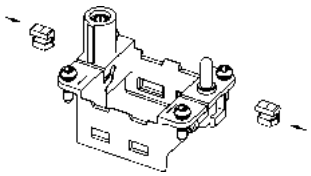 to fix the pre-assembled hinged frames



Features

- Applicable as a guiding element for electrical power and signal modules in the Han-Modular® hinged frame plus
- Considerable time saving assembly compared to conventional guide pins / bushes
- Colour coding with 6 different colours

Technical characteristics

Limiting temperature	-40 ... +125 °C
Material (accessories)	Polycarbonate
Colour (accessories)	Grey, Red, Blue, Black, Yellow, Green
Material flammability class acc. to UL 94	V-0

Identification		Part number	Drawing (dimensions in mm)
Han-Modular® , Guide element, for Han-Modular® hinged frames	Black Blue Green Grey Red Yellow	09 14 000 9993 09 14 000 9992 09 14 000 9995 09 14 000 9990 09 14 000 9991 09 14 000 9994	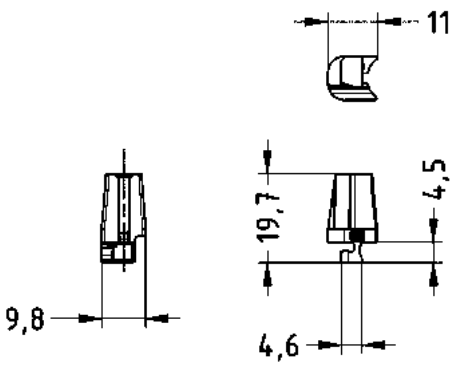

Technical characteristics

Material (accessories)	Stainless steel

Technical characteristics

RoHS	compliant

Identification	Part number	Drawing (dimensions in mm)
Han® HPR , Frame, for up to 8 single modules, A … H, Pack contents: 2x M4 screw, 2x washer SK S4, 4x cheese-head screw M6 x 20, 4x cheese-head screw M6 x 30, 4x washer SK S6 	09 11 000 9935	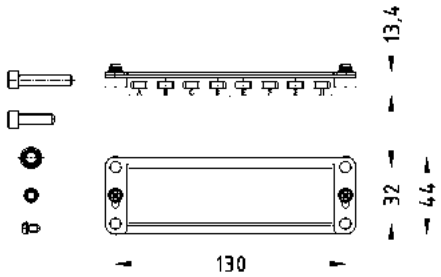 Tightening torque Fixing screws M6: 10 Nm Tightening torque Screws M4: 1.5 Nm
Han® HPR , Frame, for up to 8 single modules, a … h, Pack contents: 2x M4 screw, 2x washer SK S4, 4x cheese-head screw M6 x 20, 4x cheese-head screw M6 x 30, 4x washer SK S6 	09 11 000 9936	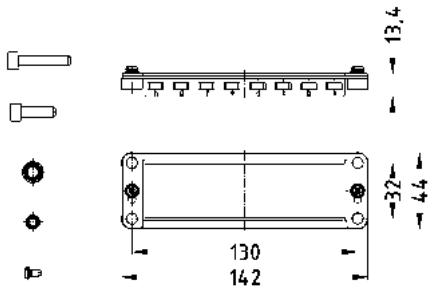 Tightening torque Fixing screws M6: 10 Nm Tightening torque Screws M4: 1.5 Nm
Han® HPR EasyCon , Frame, for up to 8 single modules, A … H, Pack contents: 2x M4/M5 distance bolts (A/F 7), 2x M5/M6 distance bolts (A/F 7), 4x M4 screw, 4x washer SK S4 	09 40 024 9931	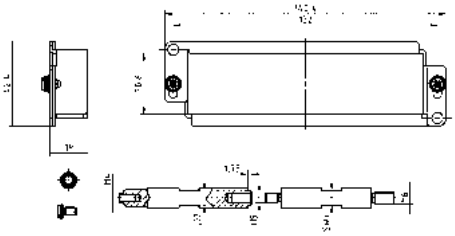 Tightening torque Distance bolt 6 Nm Tightening torque Fixing screws M4: 1.5 Nm Tightening torque M4: 1.5 Nm

Identification	Part number	Drawing (dimensions in mm)
Han® HPR EasyCon , Frame, for up to 8 single modules, a … h, Pack contents: 2x M4/M5 distance bolts (A/F 7), 2x M5/M6 distance bolts (A/F 7), 4x M4 screw, 4x washer SK S4	09 40 024 9932	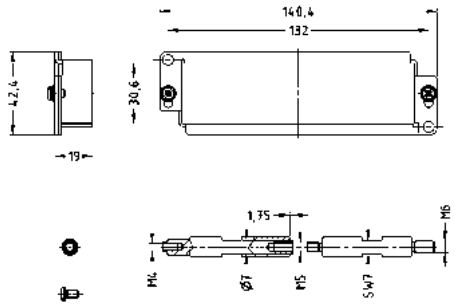 Tightening torque Distance bolt 6 Nm Tightening torque Fixing screws M4: 1.5 Nm Tightening torque M4: 1.5 Nm



Technical characteristics

Material (accessories)	Zinc die-cast
RoHS	compliant with exemption
RoHS exemptions	**6c:** Copper alloy containing up to 4 % lead by weight

Details

PE connection (0.75 ... 2.5 mm²) with cable shoe

Identification	Part number	Drawing (dimensions in mm)
Frame, for 1 module, In housing Han® 10 A 	09 14 000 0304	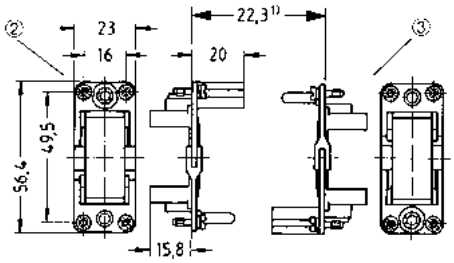 ① Distance max. 23.5 mm ② Hood ③ Housing

Technical characteristics

Material (contacts)	Copper alloy

Technical characteristics

RoHS	compliant

Identification	Conductor cross-section (mm²)	Part number	Drawing (dimensions in mm)
Han-Modular® , Cable shoe, for PE extension  for hoods/housings high construction only	16	09 14 000 9912	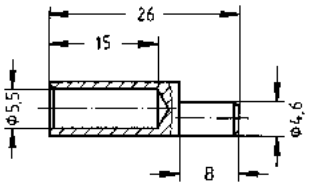 Please use pressing tools for non-insulated cable shoes following DIN 46230 with 16 mm² range (eg. K25, co. Klauke)

Contents | Page

Han® HsB..... **07.2**

Features

- Screw termination with wire protection
- Suitable for power supply applications
- Termination with standard screw driver

Technical characteristics

Number of contacts	6, 12
Electrical data acc. to IEC 61984	35 A 400/690 V 6 kV 3
Rated current	35 A
Rated voltage conductor-earth	400 V
Rated voltage conductor-conductor	690 V
Rated impulse voltage	6 kV
Pollution degree	3
Alternative electrical data	35 A 500 V 6 kV 3
Rated voltage acc. to UL	600 V
Rated voltage acc. to CSA	600 V
Insulation resistance	≥10^{10} Ω
Contact resistance	≤1 mΩ
Limiting temperature	-40 ... +125 °C
Mating cycles	≥500
Material (insert)	Polycarbonate
Colour (insert)	RAL 7032 (pebble grey)
Material (contacts)	Copper alloy
Material flammability class acc. to UL 94	V-0
RoHS	compliant with exemption
RoHS exemptions	**6c:** Copper alloy containing up to 4 % lead by weight

Derating

Current carrying capacity

The current carrying capacity of the connectors is limited by the thermal load capability of the contact element material including the connections and the insulating parts. The derating curve is therefore valid for currents which flow constantly (non-intermittent) through each contact element of the connector evenly, without exceeding the allowed maximum temperature.

Measuring and testing techniques acc. to IEC 60512-5-2

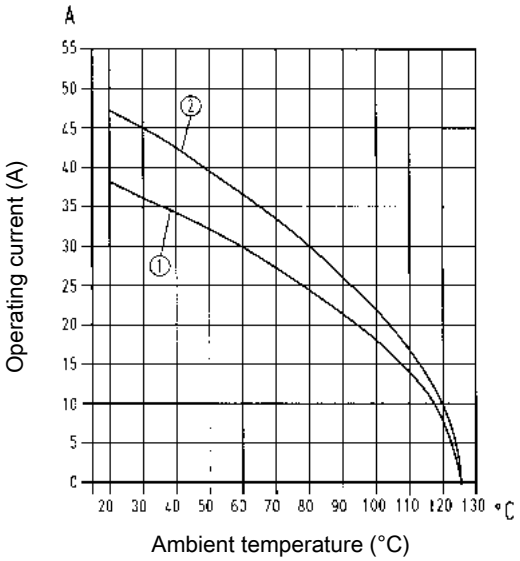

① Conductor cross-section 4 mm²
② Conductor cross-section 6 mm²

Specifications and approvals

EN 60664-1
IEC 61984
UL 1977 ECBT2.E235076
CSA-C22.2 No. 182.3 ECBT8.E235076
UL 2237 PVVA2.E318390
CSA-C22.2 No. 182.3 PVVA8.E318390

Number of contacts

6+ ⏚

35 A 400/690 V 6 kV 3
35 A 500 V 6 kV 3

Identification	Conductor cross-section (mm²)	Part number Male	Part number Female	Drawing (dimensions in mm)
Han® HsB , Screw termination, With wire protection, Contact surface: Silver plated 	1,5 ... 6	09 31 006 2601	09 31 006 2701	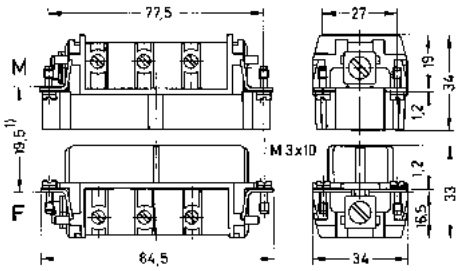 1) distance for contact max. 21 mm Tightening torque Clamping screw 1.2 Nm 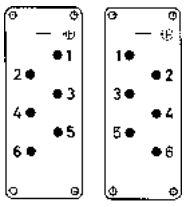 M F Contact arrangement (view from termination side) 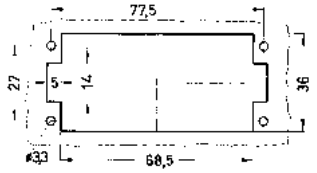 Panel cut out for use without Hoods/Housings

Number of contacts

12+ ⏚

35 A 400/690 V 6 kV 3
35 A 500 V 6 kV 3

Identification	Conductor cross-section (mm²)	Part number Male	Part number Female	Drawing (dimensions in mm)
Han® HsB , Screw termination, With wire protection, 1 ... 6 Contact surface: Silver plated  You need two inserts for a complete assembly!	1,5 ... 6	09 31 006 2601	09 31 006 2701	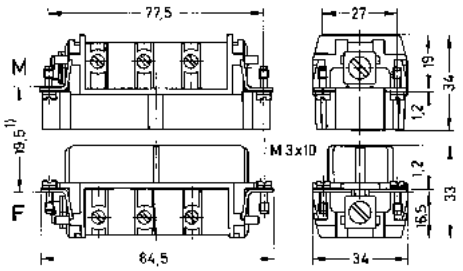 1) distance for contact max. 21 mm Tightening torque Clamping screw 1.2 Nm
Han® HsB , Continuing marking, Screw termination, With wire protection, 7 ... 12 Contact surface: Silver plated  You need two inserts for a complete assembly!	1,5 ... 6	09 31 006 2611	09 31 006 2711	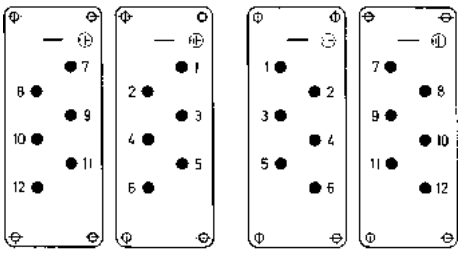 M F Contact arrangement (view from termination side) 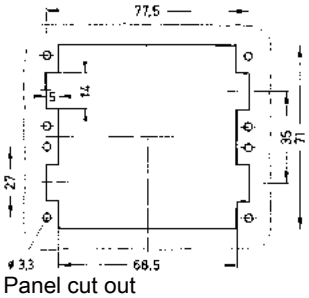 Panel cut out for use without Hoods/Housings

Contents	Page
Han D® AV	**08.4**
Han D® AV distributor.....	**08.9**
Han E® AV.....	**08.11**
Han® ES AV	**08.20**
Accessories	**08.25**

Arrangement in switch cabinet

Terminal block connector in left or right hand version; therefore identical pre-assembled interface cables can be used on both sides.

For application inside of a switch cabinet, on standard mounting rails in conjunction with Han Snap®

Mount the distributor on a standard mounting rail or on the terminal block connector Han D® AV!

The terminal block connectors can be supplied for left or right hand applications so that the PE terminal as well as the terminal for contact no. 1 will be accessible from the “top” in both types of installation.

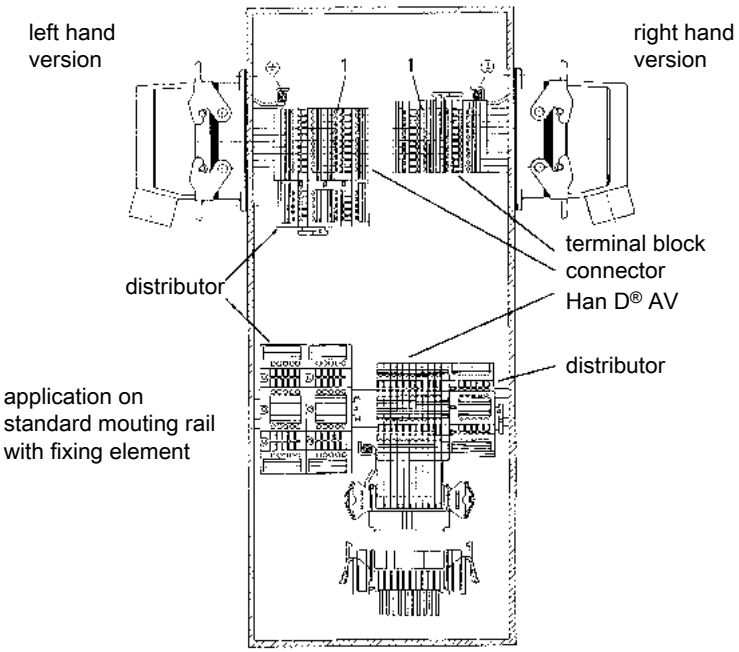

Assembly of terminal block connector

A seperate pre-assembly is possible: Therefore, the distributor must be thread from the inside of the switch cabinet into the standard bulkhead mounted housing.

Note:
On one side of the distributor is a bar for PE connection. Insert the distributor – slightly inclined, the side without the PE conductor leading – from the rear into the bulkhead mounted housing!

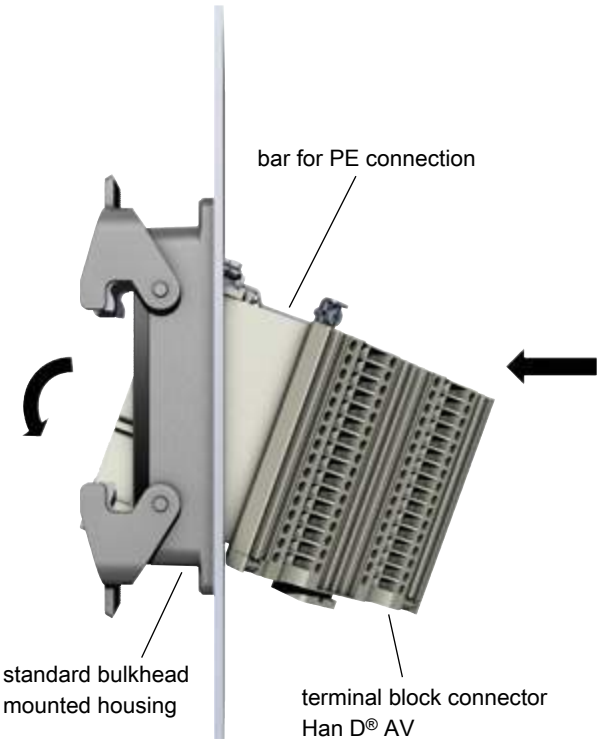

Identification

The individual terminals have the same identification as on the mating face. In addition each circuit may be separately labelled with identification strips fitted in the adjacent slots.

Counterparts

For suitable mating inserts of serie Han D® with crimp termination please refer to the chapter 02.

Arrangement in switch cabinet

Terminal block connector in left or right hand version; therefore identical pre-assembled interface cables can be used on both sides.

For application inside of a switch cabinet, on standard mounting rails in conjunction with Han Snap®

The terminal block connectors can be supplied for left or right hand applications so that the PE terminal as well as the terminal for contact no. 1 will be accessible from the “top” in both types of installation.

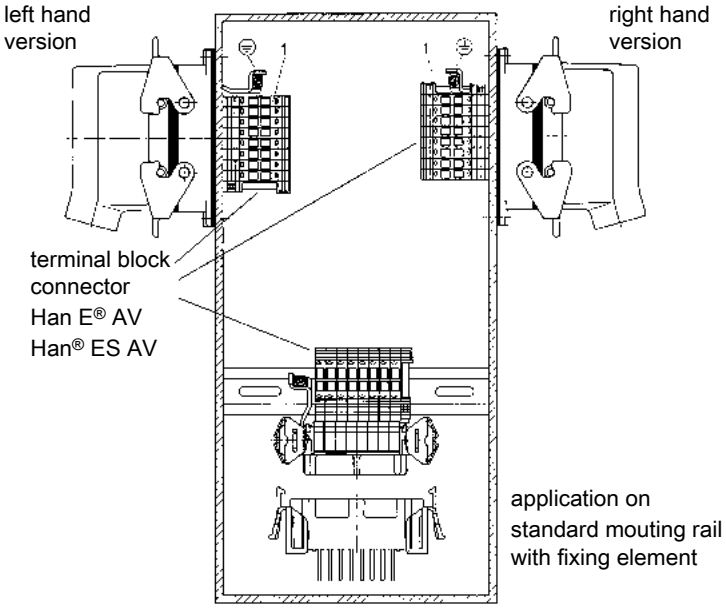

Assembly of terminal block connector

The teminal block connector is inserted into the standard bulkhead mounted housing and fastened – like any standard contact insert – with four fixing screws.

A seperate pre-assembly is possible with Han E® AV and Han® ES AV, in the variants with 16 and 24 poles.
Therefore, the distributor must be thread from the inside of the switch cabinet into the standard bulkhead mounted housing.

Note:
On one side of the distributor is a bar for PE connection. Insert the distributor – slightly inclined, the side without the PE conductor leading – from the rear into the bulkhead mounted housing!

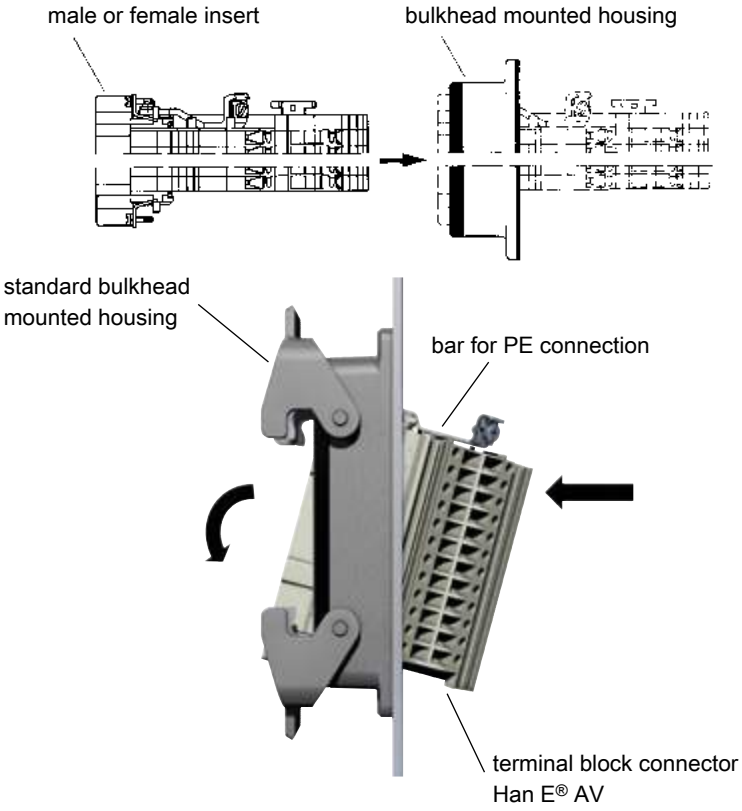

Identification

The individual terminals have the same identification as on the mating face. In addition each circuit may be separately labelled with identification strips fitted in the adjacent slots.

Counterparts

For suitable mating inserts of series Han E® and Han® ES with screw, cage-clamp or crimp termination please refer to the chapter 03.

Features

- for left or right hand applications available
- PE and connecting terminal for contact no.1 are at the top in both types of installation
- Mountable in standard bulkhead mounted housings and on standard rails by using of fixing elements
- Screw termination with wire protection

Technical characteristics

Number of contacts	40, 64
Electrical data acc. to IEC 61984	10 A 250 V 4 kV 3
Rated current	10 A
Rated voltage	250 V
Rated impulse voltage	4 kV
Pollution degree	3
Rated voltage acc. to UL	600 V
Insulation resistance	≥10^{10} Ω
Contact resistance	≤4 mΩ
Limiting temperature	-40 ... +125 °C
Mating cycles	≥500
Material (insert)	Polycarbonate
Colour (insert)	RAL 7032 (pebble grey)
Material (contacts)	Copper alloy
Material flammability class acc. to UL 94	V-0
RoHS	compliant

Derating

Current carrying capacity

The current carrying capacity of the connectors is limited by the thermal load capability of the contact element material including the connections and the insulating parts. The derating curve is therefore valid for currents which flow constantly (non-intermittent) through each contact element of the connector evenly, without exceeding the allowed maximum temperature.

Measuring and testing techniques acc. to IEC 60512-5-2

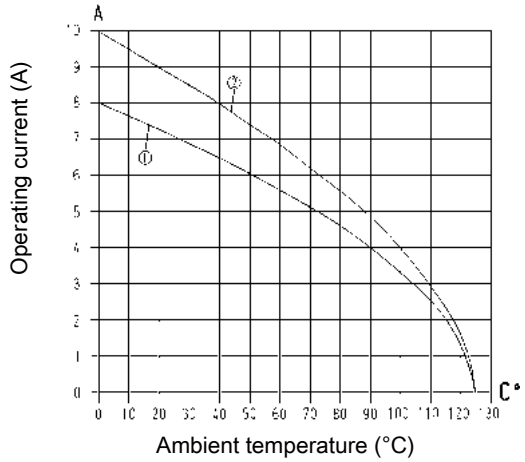

① Han® 40 D AV Conductor cross-section 0.75 mm²
② Han® 40 D AV Conductor cross-section 1.5 mm²

Derating

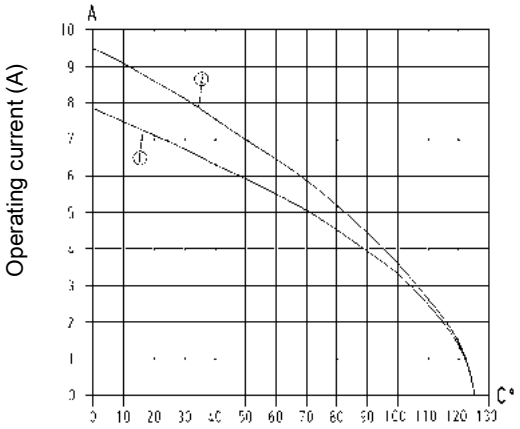

① Han® 64 D AV Conductor cross-section 0.75 mm²
② Han® 64 D AV Conductor cross-section 1.5 mm²

Specifications and approvals

EN 60664-1
IEC 61984
UL 1977 ECBT2.E235076
DNV GL

Details

Stripping length 8 ... 11 mm

Tightening torque 0.5 Nm

Hoods/Housings see chapter 31

Identification strips

Multi contour (MK) the following identification strips may be used

- HARTING – 09 21 000 9971
- Murrplastik – KPX 5/10-5
- Weidmüller – DEK 5
- Phoenix – 4 K – DST 5
- Phoenix – DS 5
- Phoenix – ZB 5
- WAGO – WSB 5

Single contour (SK) the following identification strips may be used

- Murrplastik – KWI 5/10
- Murrplastik – KWI 5/10-5
- Murrplastik – KWI 8.6-5
- Wieland – 9705 A 5/10
- WAGO – Mini - WSB

Identification

The individual terminals have the same identification as on the mating face. In addition each circuit may be separately labelled with identification strips fitted in the adjacent slots.

Number of contacts

40+ ⏚

10 A 250 V 4 kV 3

Identification	Conductor cross-section (mm²)	Part number Male	Part number Female	Drawing (dimensions in mm)
Han D® AV , Terminal block connector, Left hand version, Multi contour (MK), Screw termination, Contact surface: Silver plated 	0,2 ... 2,5	09 21 040 4601	09 21 040 4701	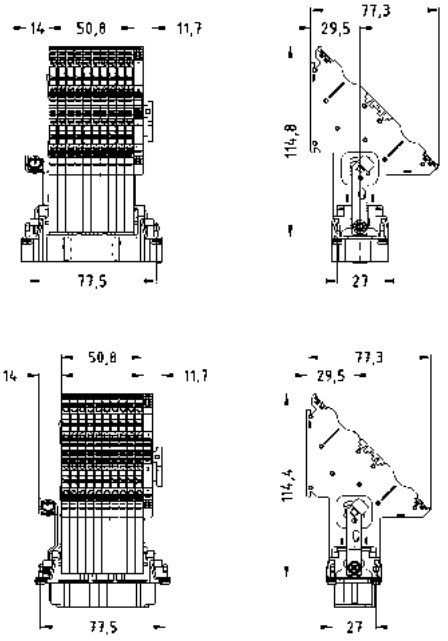
Han D® AV , Terminal block connector, Left hand version, Single contour (SK), Screw termination, Contact surface: Silver plated 	0,2 ... 2,5	09 21 040 4602	09 21 040 4702	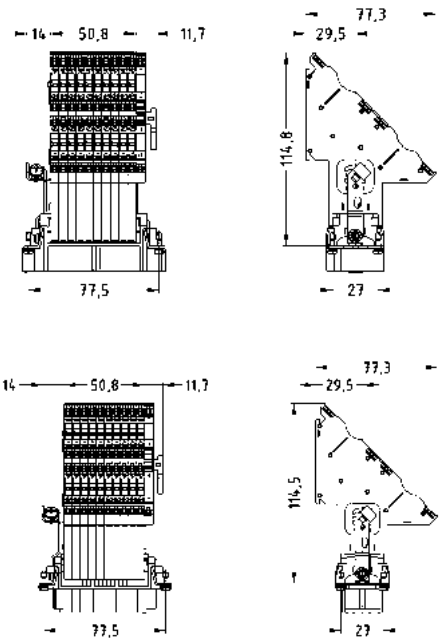

Identification	Conductor cross-section (mm²)	Part number Male	Part number Female	Drawing (dimensions in mm)
Han D® AV , Terminal block connector, Right hand version, Multi contour (MK), Screw termination, Contact surface: Silver plated 	0,2 ... 2,5	09 21 040 4611	09 21 040 4711	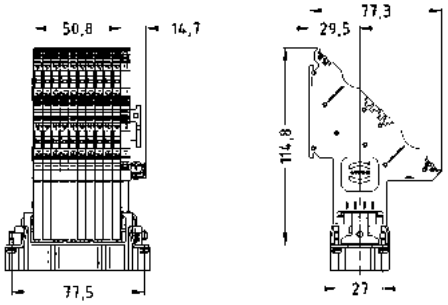 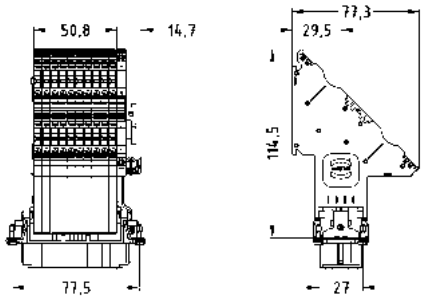
Han D® AV , Terminal block connector, Right hand version, Single contour (SK), Screw termination, Contact surface: Silver plated 	0,2 ... 2,5	09 21 040 4612	09 21 040 4712	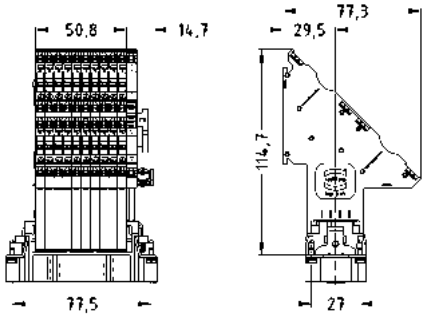 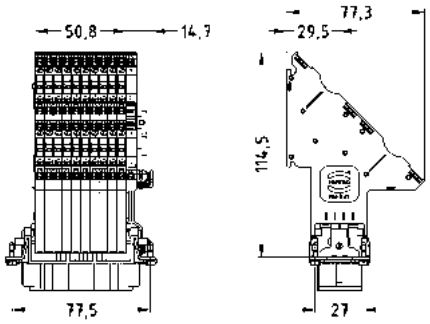

Number of contacts

64+ ⏚

10 A 250 V 4 kV 3

Identification	Conductor cross-section (mm²)	Part number Male	Part number Female	Drawing (dimensions in mm)
Han D® AV , Terminal block connector, Left hand version, Multi contour (MK), Screw termination, Contact surface: Silver plated 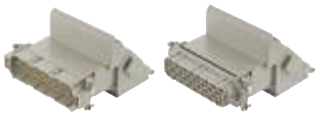	0,2 ... 2,5	09 21 064 4601	09 21 064 4701	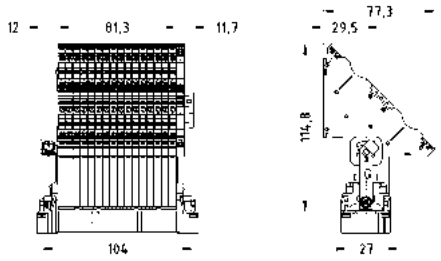 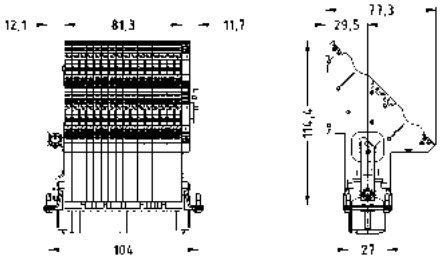
Han D® AV , Terminal block connector, Left hand version, Single contour (SK), Screw termination, Contact surface: Silver plated 	0,2 ... 2,5	09 21 064 4602	09 21 064 4702	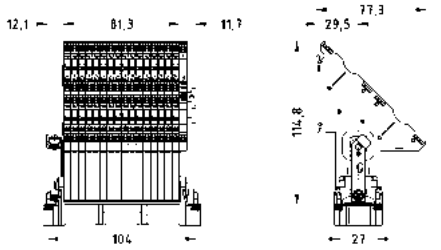 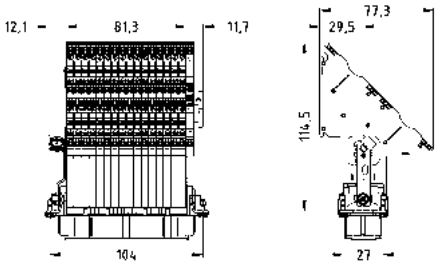

Identification	Conductor cross-section (mm²)	Part number Male	Part number Female	Drawing (dimensions in mm)
Han D® AV , Terminal block connector, Right hand version, Multi contour (MK), Screw termination, Contact surface: Silver plated 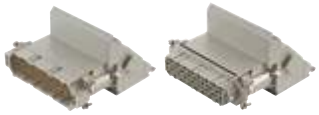	0,2 ... 2,5	09 21 064 4611	09 21 064 4711	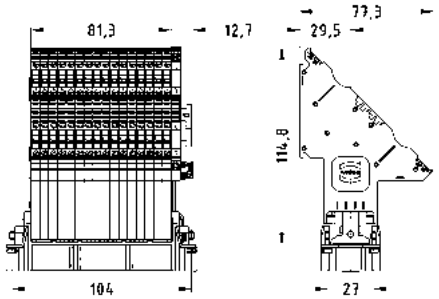 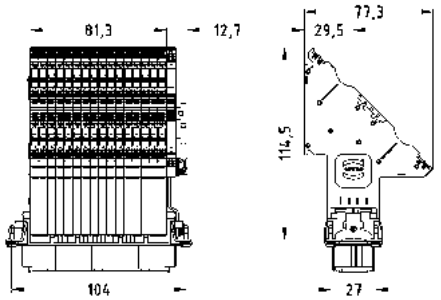
Han D® AV , Terminal block connector, Right hand version, Single contour (SK), Screw termination, Contact surface: Silver plated 	0,2 ... 2,5	09 21 064 4612	09 21 064 4712	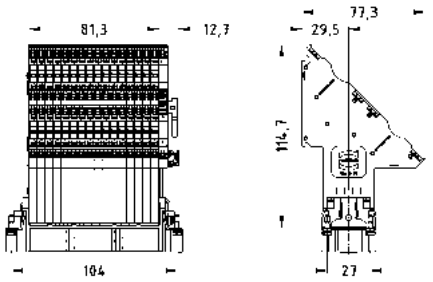 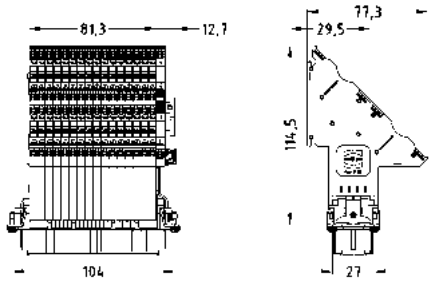

Han D® AV distributor

Features

- Easy mounting direct adjacent to terminal block connector Han D® AV
- By using of fixing elements mountable on standard rails
- Screw termination with wire protection

Technical characteristics

Electrical data acc. to IEC 61984	16 A 400/690 V 6 kV 3
Rated current	16 A
Rated voltage conductor-earth	400 V
Rated voltage conductor-conductor	690 V
Rated impulse voltage	6 kV
Pollution degree	3
Rated voltage acc. to UL	600 V
Insulation resistance	≥10^{10} Ω
Limiting temperature	-40 ... +125 °C
Material (insert)	Polycarbonate
Colour (insert)	RAL 7032 (pebble grey)
Material (contacts)	Copper alloy
Material flammability class acc. to UL 94	V-0
RoHS	compliant

Specifications and approvals

EN 60664-1
IEC 61984
UL 1977 ECBT2.E235076

Details

Stripping length 8 ... 11 mm

Tightening torque 0.5 Nm

Identification strips

the following identification strips may be used

- HARTING – 09 21 000 9971
- Murrplastik – KPX 5/10-5
- Phoenix – 4 K – DST 5
- Phoenix – ZB 5
- Phoenix – DS 5

Identification

The individual terminals have the same identification as on the mating face. In addition each circuit may be separately labelled with identification strips fitted in the adjacent slots.

Mounting example

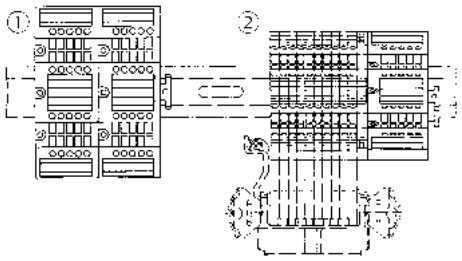

① Distributor On standard rail
② Distributor With teminal block connector Han D® AV

Han D® AV distributor

16 A 400/690 V 6 kV 3



Identification	Conductor cross-section (mm²)	Part number	Drawing (dimensions in mm)
Han D® AV , Distributor, 20 termination points, Screw termination, Contact surface: Tin plated Optionally mountable to terminal block connectors	0,2 ... 2,5	09 42 020 0111	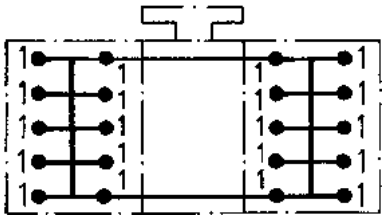
Han D® AV , Distributor, 2 x10 termination points, Screw termination, Contact surface: Tin plated Optionally mountable to terminal block connectors	0,2 ... 2,5	09 42 020 0121	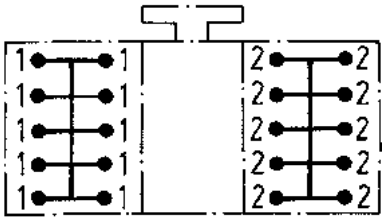
Han D® AV , Distributor, 4x 4 termination points, Screw termination, Contact surface: Tin plated Optionally mountable to terminal block connectors	0,2 ... 2,5	09 42 020 0131	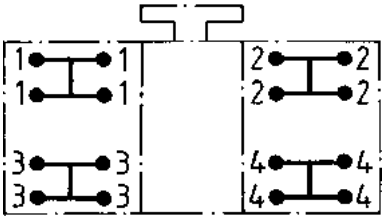 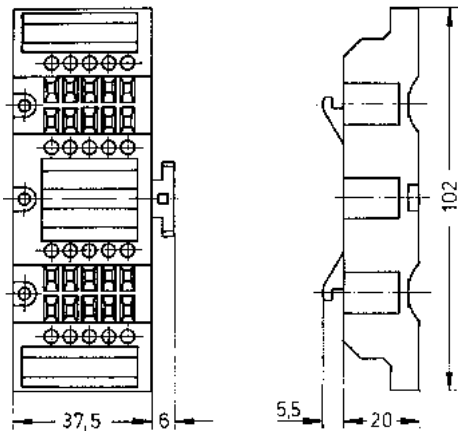

Features

- for left or right hand applications available
- PE and connecting terminal for contact no.1 are at the top in both types of installation
- Mountable in standard bulkhead mounted housings and on standard rails by using of fixing elements
- Screw termination with wire protection

Technical characteristics

Number of contacts	6, 10, 16, 24
Electrical data acc. to IEC 61984	16 A 500 V 6 kV 3
Rated current	16 A
Rated voltage	500 V
Rated impulse voltage	6 kV
Pollution degree	3
Rated voltage acc. to UL	600 V
Insulation resistance	≥10^{10} Ω
Contact resistance	≤4 mΩ
Limiting temperature	-40 ... +125 °C
Mating cycles	≥500
Material (insert)	Polycarbonate
Colour (insert)	RAL 7032 (pebble grey)
Material (contacts)	Copper alloy
Material flammability class acc. to UL 94	V-0
RoHS	compliant with exemption
RoHS exemptions	**6c:** Copper alloy containing up to 4 % lead by weight

Derating

Current carrying capacity

The current carrying capacity of the connectors is limited by the thermal load capability of the contact element material including the connections and the insulating parts. The derating curve is therefore valid for currents which flow constantly (non-intermittent) through each contact element of the connector evenly, without exceeding the allowed maximum temperature.

Measuring and testing techniques acc. to IEC 60512-5-2

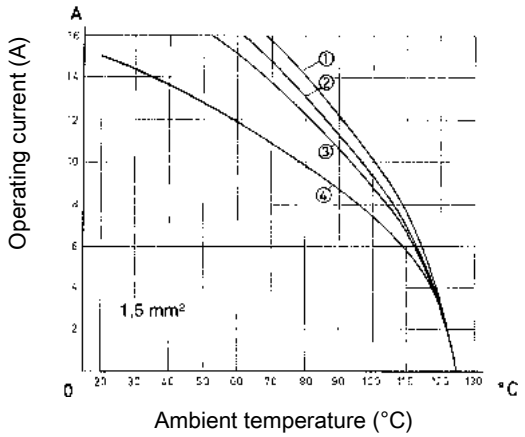

Ambient temperature (°C)

① Han® 6 E AV
② Han® 10 E AV
③ Han® 16 E AV
④ Han® 24 E AV

Derating

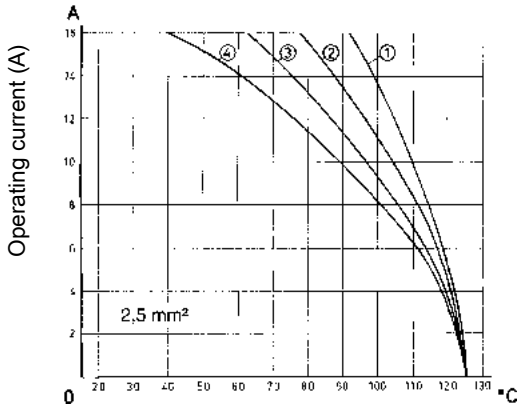

Ambient temperature (°C)

① Han® 6 E AV
② Han® 10 E AV
③ Han® 16 E AV
④ Han® 24 E AV

Specifications and approvals

EN 60664-1
IEC 61984
UL 1977 ECBT2.E235076
DNV GL

Details

Stripping length 8 ... 11 mm

Tightening torque 0.5 Nm

Identification strips

Multi contour (MK) the following identification strips may be used

- HARTING 6 x 10 – 09 33 000 9971
- Murrplastik – KPX 6 / 10
- Weidmüller – DEK 6.5
- Phoenix – 4 K – DST 6

Single contour (SK) the following identification strips may be used

- Murrplastik – KWI 6/10
- Wieland – 9705 A/6.7

Identification

The individual terminals have the same identification as on the mating face. In addition each circuit may be separately labelled with identification strips fitted in the adjacent slots.

Number of contacts

6+ ⏚

16 A 500 V 6 kV 3

Identification	Conductor cross-section (mm²)	Part number Male	Part number Female	Drawing (dimensions in mm)
Han E® AV , Terminal block connector, Left hand version, Multi contour (MK), Screw termination, Contact surface: Silver plated 	0,2 ... 2,5	09 33 006 4625	09 33 006 4725	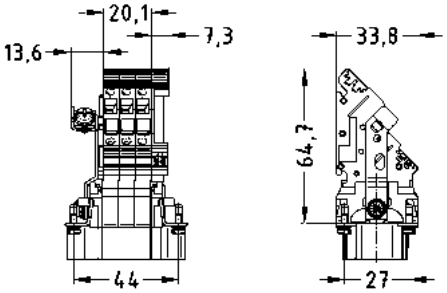 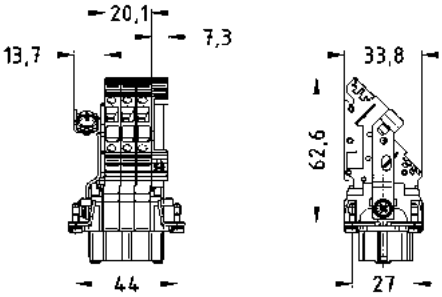
Han E® AV , Terminal block connector, Left hand version, Single contour (SK), Screw termination, Contact surface: Silver plated 	0,2 ... 2,5	09 33 006 4626	09 33 006 4726	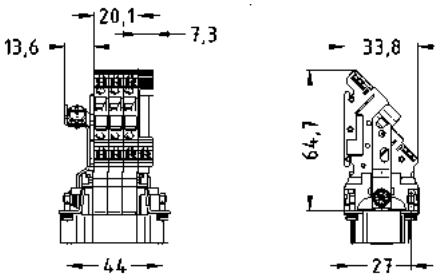 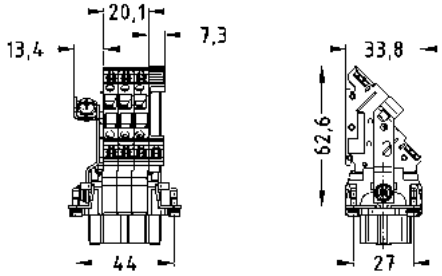

Identification	Conductor cross-section (mm²)	Part number Male	Part number Female	Drawing (dimensions in mm)
Han E® AV , Terminal block connector, Right hand version, Multi contour (MK), Screw termination, Contact surface: Silver plated 	0,2 ... 2,5	09 33 006 4635	09 33 006 4735	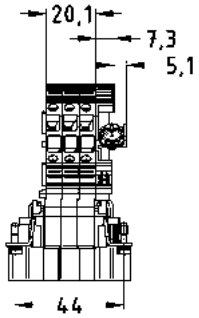 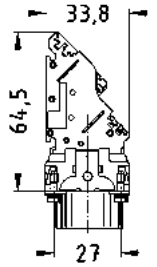 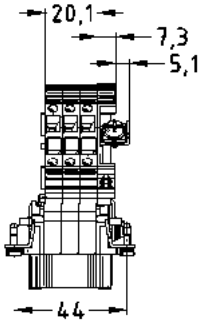 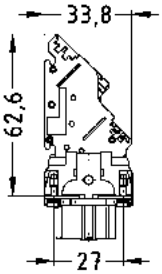
Han E® AV , Terminal block connector, Right hand version, Single contour (SK), Screw termination, Contact surface: Silver plated 	0,2 ... 2,5	09 33 006 4636	09 33 006 4736	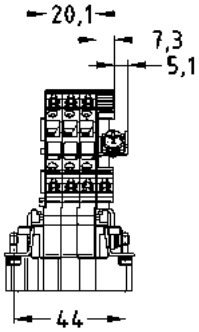 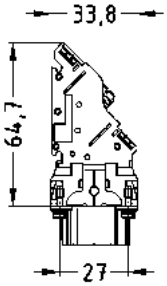 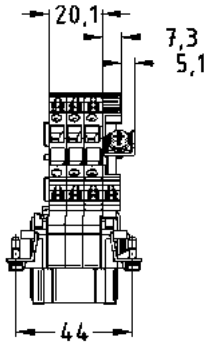 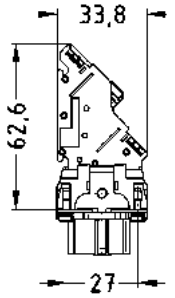

Number of contacts

10+ ⏚

16 A 500 V 6 kV 3

Identification	Conductor cross-section (mm²)	Part number Male	Part number Female	Drawing (dimensions in mm)
Han E® AV , Terminal block connector, Left hand version, Multi contour (MK), Screw termination, Contact surface: Silver plated 	0,2 ... 2,5	09 33 010 4625	09 33 010 4725	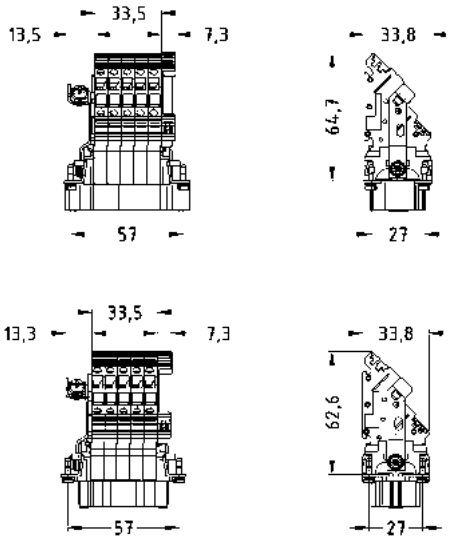
Han E® AV , Terminal block connector, Left hand version, Single contour (SK), Screw termination, Contact surface: Silver plated 	0,2 ... 2,5	09 33 010 4626	09 33 010 4726	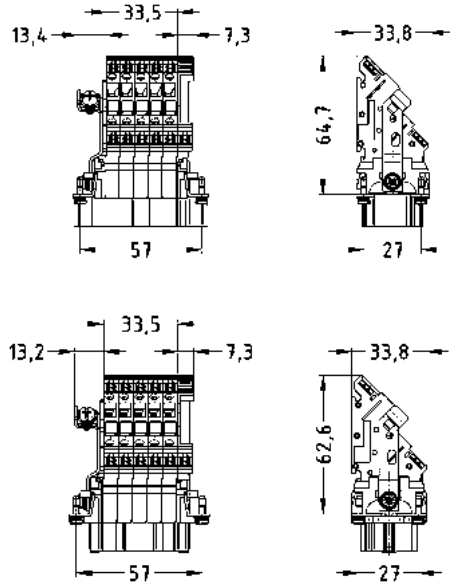

Identification	Conductor cross-section (mm²)	Part number Male	Part number Female	Drawing (dimensions in mm)
Han E® AV , Terminal block connector, Right hand version, Multi contour (MK), Screw termination, Contact surface: Silver plated 	0,2 ... 2,5	09 33 010 4635	09 33 010 4735	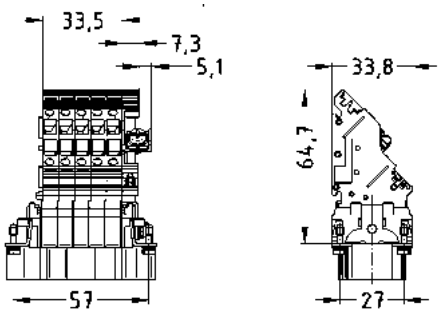 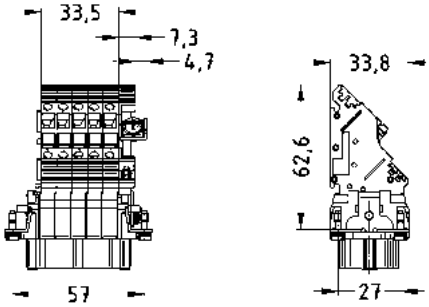
Han E® AV , Terminal block connector, Right hand version, Single contour (SK), Screw termination, Contact surface: Silver plated 	0,2 ... 2,5	09 33 010 4636	09 33 010 4736	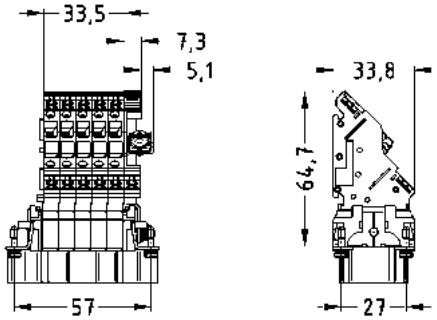 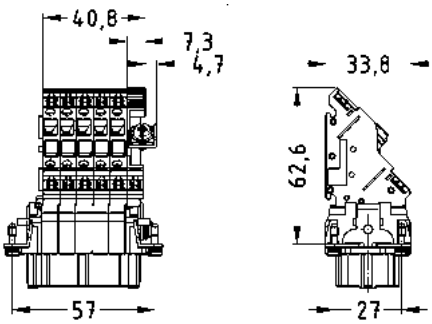

Number of contacts

16+

16 A 500 V 6 kV 3

Identification	Conductor cross-section (mm²)	Part number Male	Part number Female	Drawing (dimensions in mm)
Han E® AV , Terminal block connector, Left hand version, Multi contour (MK), Screw termination, Contact surface: Silver plated 	0,2 ... 2,5	09 33 016 4625	09 33 016 4725	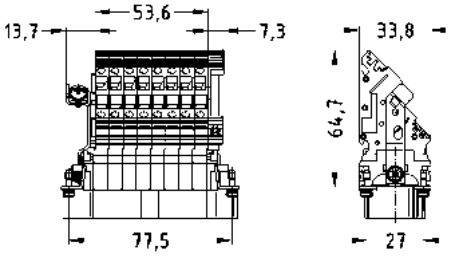 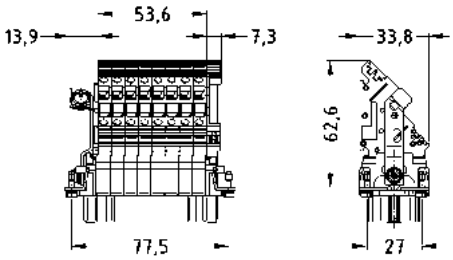
Han E® AV , Terminal block connector, Left hand version, Single contour (SK), Screw termination, Contact surface: Silver plated 	0,2 ... 2,5	09 33 016 4626	09 33 016 4726	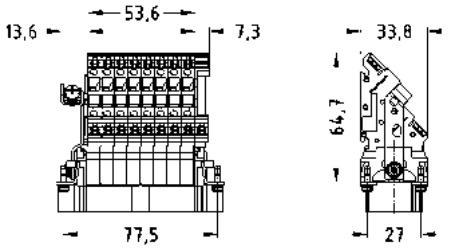 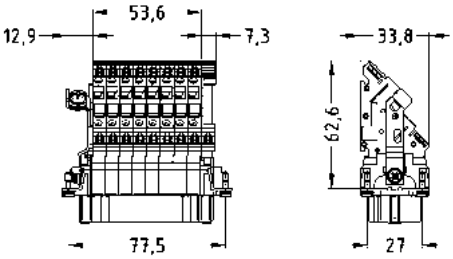

Identification	Conductor cross-section (mm²)	Part number Male	Part number Female	Drawing (dimensions in mm)
Han E® AV , Terminal block connector, Right hand version, Multi contour (MK), Screw termination, Contact surface: Silver plated 	0,2 ... 2,5	09 33 016 4635	09 33 016 4735	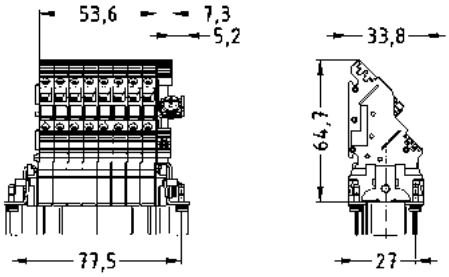 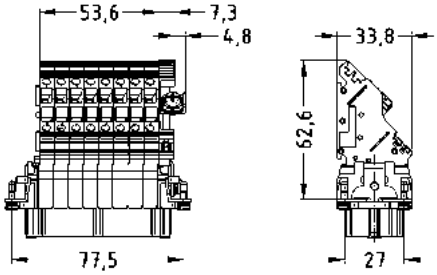
Han E® AV , Terminal block connector, Right hand version, Single contour (SK), Screw termination, Contact surface: Silver plated 	0,2 ... 2,5	09 33 016 4636	09 33 016 4736	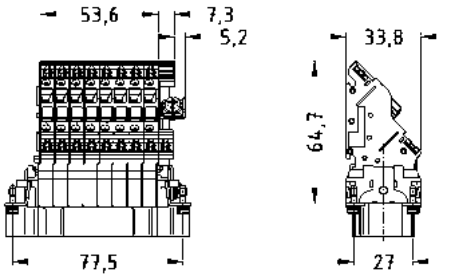 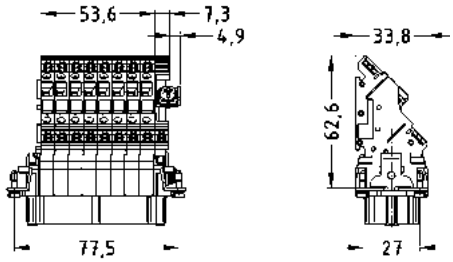

Number of contacts

24+ ⏚

16 A 500 V 6 kV 3

Identification	Conductor cross-section (mm²)	Part number Male	Part number Female	Drawing (dimensions in mm)
Han E® AV , Terminal block connector, Left hand version, Multi contour (MK), Screw termination, Contact surface: Silver plated 	0,2 ... 2,5	09 33 024 4625	09 33 024 4725	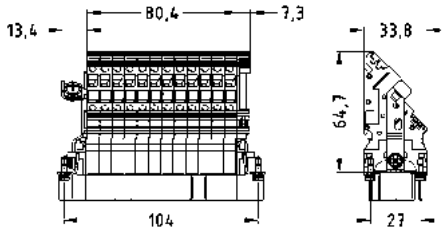 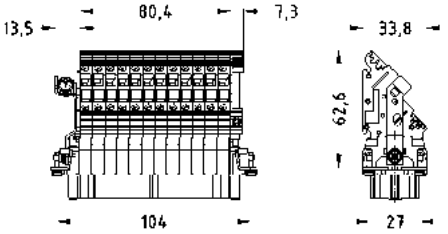
Han E® AV , Terminal block connector, Left hand version, Single contour (SK), Screw termination, Contact surface: Silver plated 	0,2 ... 2,5	09 33 024 4626	09 33 024 4726	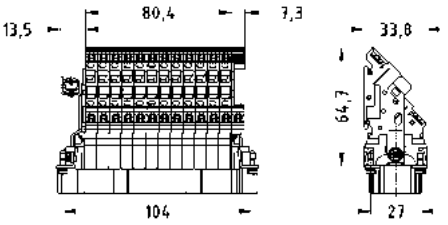 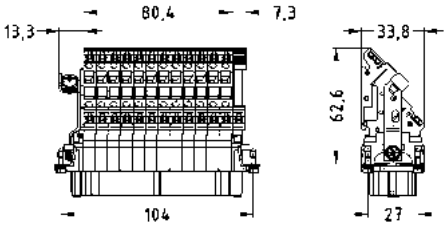

Identification	Conductor cross-section (mm²)	Part number Male	Part number Female	Drawing (dimensions in mm)
Han E® AV , Terminal block connector, Right hand version, Multi contour (MK), Screw termination, Contact surface: Silver plated 	0,2 ... 2,5	09 33 024 4635	09 33 024 4735	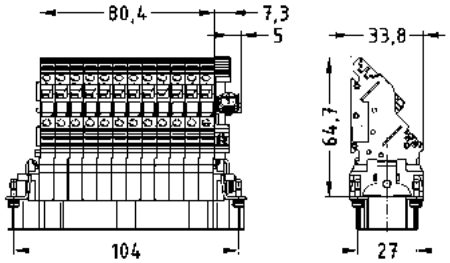 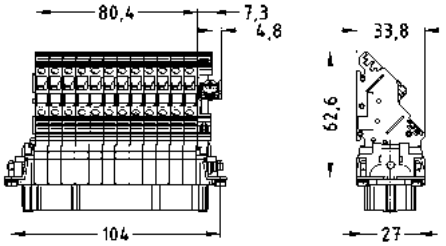
Han E® AV , Terminal block connector, Right hand version, Single contour (SK), Screw termination, Contact surface: Silver plated 	0,2 ... 2,5	09 33 024 4636	09 33 024 4736	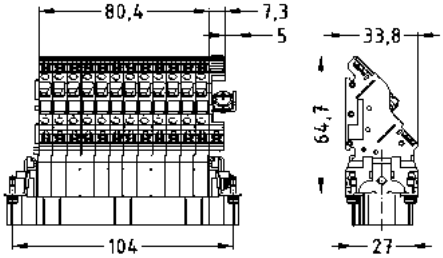 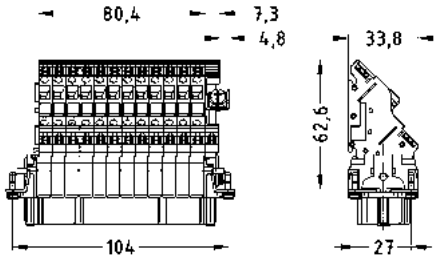

Features

- for left or right hand applications available
- PE and connecting terminal for contact no.1 are at the top in both types of installation
- Mountable in standard bulkhead mounted housings and on standard rails by using of fixing elements
- Reliable cage clamp termination

Technical characteristics

Number of contacts	6, 10, 16, 24
Electrical data acc. to IEC 61984	16 A 500 V 6 kV 3
Rated current	16 A
Rated voltage	500 V
Rated impulse voltage	6 kV
Pollution degree	3
Rated current acc. to UL	12 A
Rated current acc. to CSA	12 A
Rated voltage acc. to UL	600 V
Insulation resistance	≥10^{10} Ω
Contact resistance	≤4 mΩ
Limiting temperature	-40 ... +125 °C
Mating cycles	≥500
Material (insert)	Polycarbonate
Colour (insert)	RAL 7032 (pebble grey)
Material (contacts)	Copper alloy
Material flammability class acc. to UL 94	V-0
RoHS	compliant with exemption
RoHS exemptions	**6c:** Copper alloy containing up to 4 % lead by weight

Derating

Current carrying capacity

The current carrying capacity of the connectors is limited by the thermal load capability of the contact element material including the connections and the insulating parts. The derating curve is therefore valid for currents which flow constantly (non-intermittent) through each contact element of the connector evenly, without exceeding the allowed maximum temperature.

Measuring and testing techniques acc. to IEC 60512-5-2

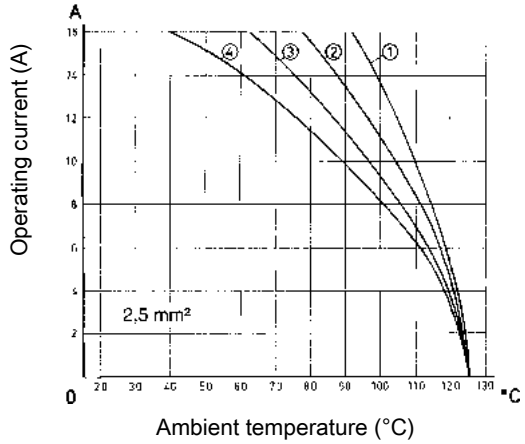

① Han® 6 ES AV
② Han® 10 ES AV
③ Han® 16 ES AV
④ Han® 24 ES AV

Derating

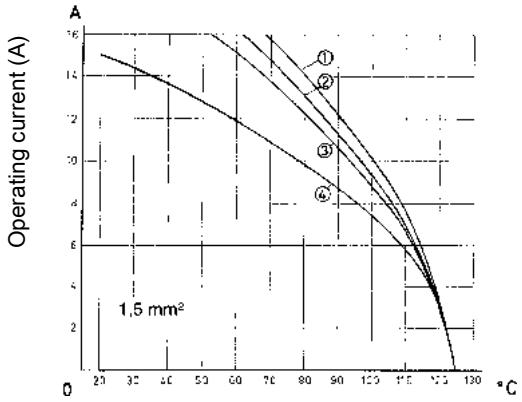

① Han® 6 ES AV
② Han® 10 ES AV
③ Han® 16 ES AV
④ Han® 24 ES AV

Specifications and approvals

EN 60664-1
IEC 61984
UL 1977 ECBT2.E235076
DNV GL

Details

Stripping length 8 ... 11 mm

Identification strips

Single contour (SK) the following identification strips may be used

- HARTING – 09 33 000 9973 (6 x 15)
- Murrplastik – KWI 6/15
- Wieland – 9705 A/6.7

Identification

The individual terminals have the same identification as on the mating face. In addition each circuit may be separately labelled with identification strips fitted in the adjacent slots.

Number of contacts

6+ ⏚

16 A 500 V 6 kV 3

Identification	Conductor cross-section (mm²)	Part number Male	Part number Female	Drawing (dimensions in mm)
Han® ES AV , Terminal block connector, Left hand version, Single contour (SK), Cage-clamp termination, Contact surface: Silver plated 	0,14 ... 2,5	09 33 006 4629	09 33 006 4729	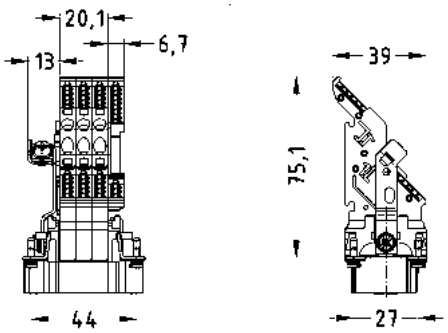 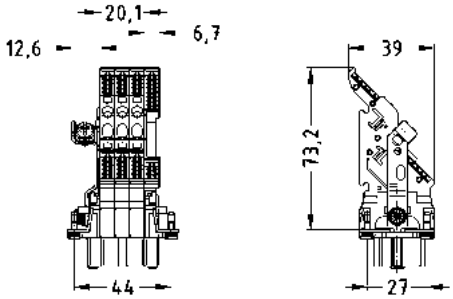
Han® ES AV , Terminal block connector, Right hand version, Single contour (SK), Cage-clamp termination, Contact surface: Silver plated 	0,14 ... 2,5	09 33 006 4639	09 33 006 4739	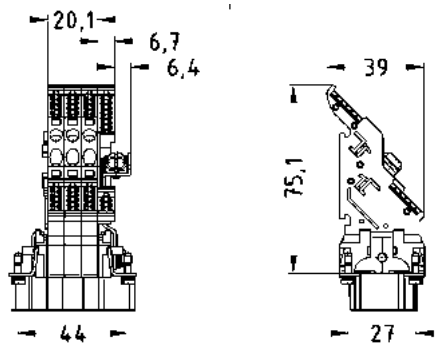 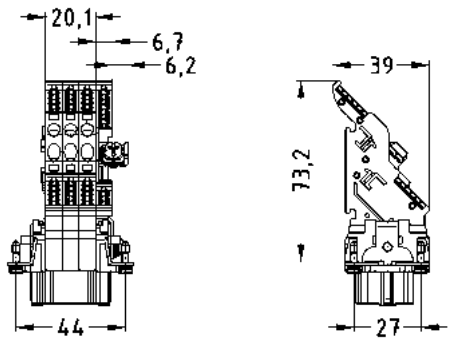

Number of contacts

10+ ⏚

16 A 500 V 6 kV 3

Identification	Conductor cross-section (mm²)	Part number Male	Part number Female	Drawing (dimensions in mm)
Han® ES AV , Terminal block connector, Left hand version, Single contour (SK), Cage-clamp termination, Contact surface: Silver plated 	0,14 ... 2,5	09 33 010 4629	09 33 010 4729	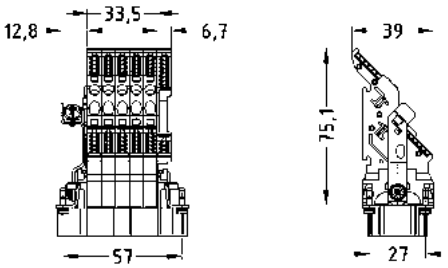 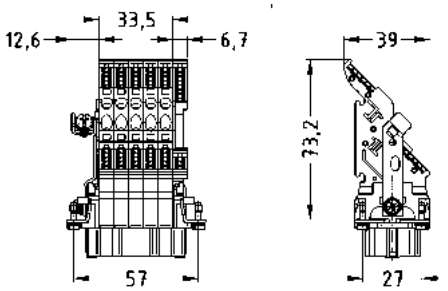
Han® ES AV , Terminal block connector, Right hand version, Single contour (SK), Cage-clamp termination, Contact surface: Silver plated 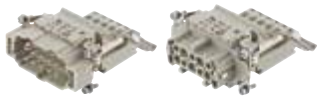	0,14 ... 2,5	09 33 010 4639	09 33 010 4739	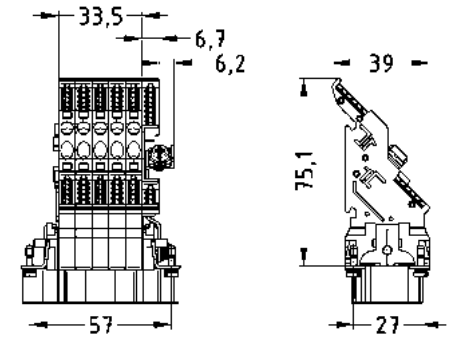 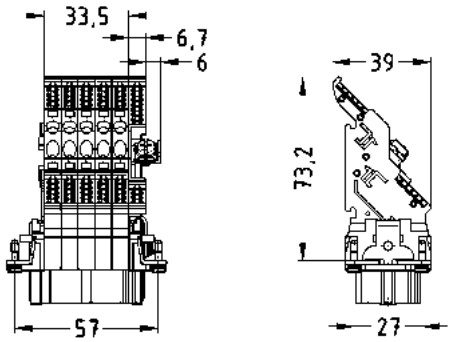

Number of contacts

16+ ⏚

16 A 500 V 6 kV 3

Identification	Conductor cross-section (mm²)	Part number Male	Part number Female	Drawing (dimensions in mm)
Han® ES AV , Terminal block connector, Left hand version, Single contour (SK), Cage-clamp termination, Contact surface: Silver plated 	0,14 ... 2,5	09 33 016 4629	09 33 016 4729	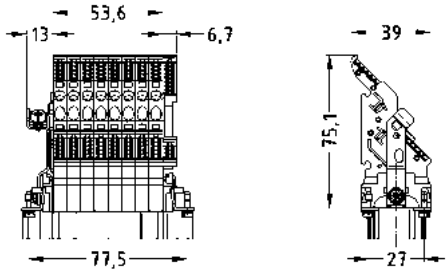 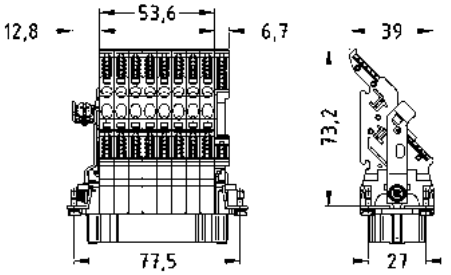
Han® ES AV , Terminal block connector, Right hand version, Single contour (SK), Cage-clamp termination, Contact surface: Silver plated 	0,14 ... 2,5	09 33 016 4639	09 33 016 4739	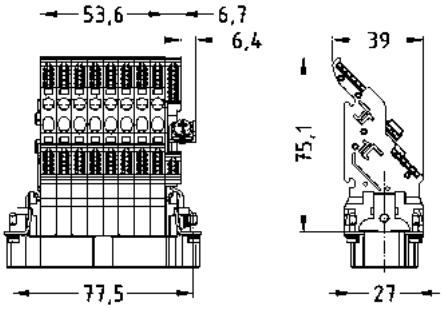 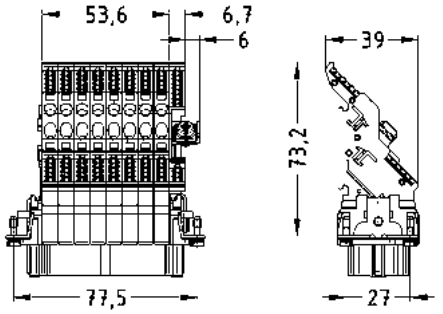

Number of contacts

24+ ⏚

16 A 500 V 6 kV 3

Identification	Conductor cross-section (mm²)	Part number Male	Part number Female	Drawing (dimensions in mm)
Han® ES AV , Terminal block connector, Left hand version, Single contour (SK), Cage-clamp termination, Contact surface: Silver plated 	0,14 ... 2,5	09 33 024 4629	09 33 024 4729	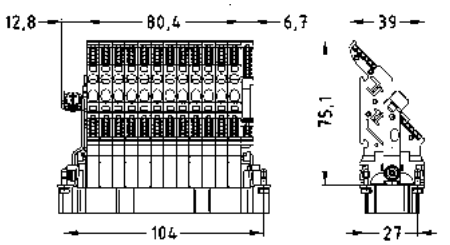 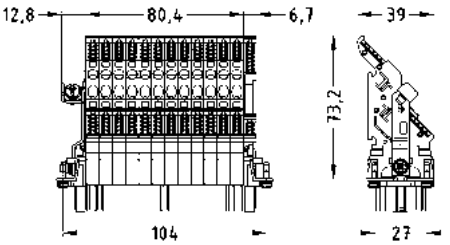
Han® ES AV , Terminal block connector, Right hand version, Single contour (SK), Cage-clamp termination, Contact surface: Silver plated 	0,14 ... 2,5	09 33 024 4639	09 33 024 4739	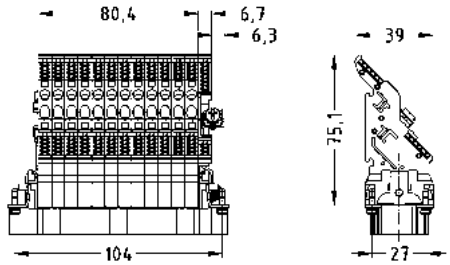 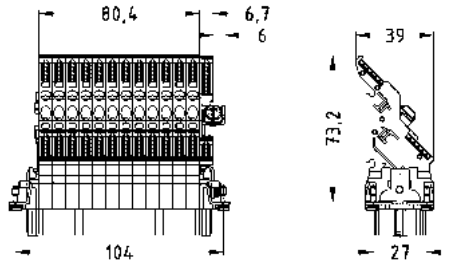

Technical characteristics

RoHS	compliant

Details

There are moulded slots at the rear of the terminal block connectors and distributors to accept the fixing elements. When used these elements, for example, can be used to secure the connectors inside the switch cabinets on standard rails.

Details

For mounting

Terminal block connector Han E® AV / Han® ES AV
Han® 6 E AV, Han® 6 ES AV = 1 fixing element
Han® 10/16/24 E AV, Han® 10/16/24 ES AV = 2 fixing elements
Terminal block connector Han D® AV
Han® 40/64 D AV = 2 fixing elements
Distributor = 1 fixing element

Identification	Part number	Drawing (dimensions in mm)
Han D® AV Han D® AV Distributor, Fixing element 	09 33 000 9928	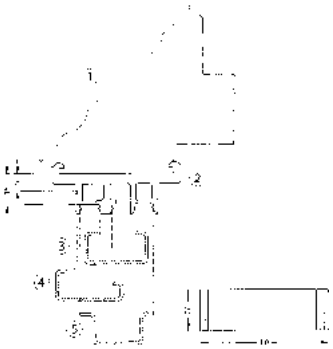 ① Terminal block connector Han D® AV ② Fixing element ③ C-rail IEC 60715-C30 ④ G-rail IEC 60715-G32 ⑤ Rail IEC 60715-35 x 7.5 or -35 x 15
Han E® AV / Han® ES AV , Fixing element 	09 33 000 9929	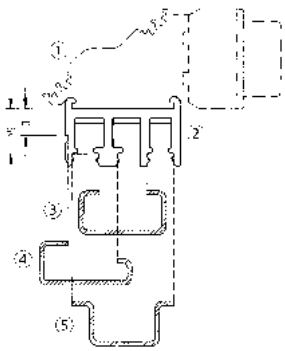 ① Terminal block connector Han E® AV ② Fixing element ③ C-rail IEC 60715-C30 ④ G-rail IEC 60715-G32 ⑤ Rail IEC 60715-35 x 7.5 or -35 x 15

Technical characteristics

RoHS compliant

Identification	Part number	Drawing (dimensions in mm)
Han D® AV , Identification strip, Multi contour (MK), Pack contents: 88 pieces in one block 	09 21 000 9971	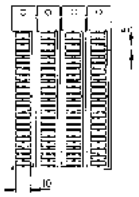
Han E® AV , Identification strip, Multi contour (MK), Pack contents: 64 pieces in one block 	09 33 000 9971	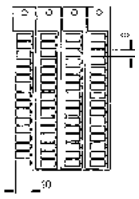
Han® ES AV , Identification strip, Single contour (SK), Pack contents: 64 pieces in one block 	09 33 000 9973	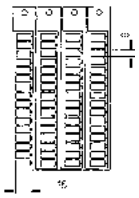
Adapter, To fit identification strips, Single contour (SK) 	09 33 000 9964 09 33 000 9965 09 33 000 9966 09 33 000 9967	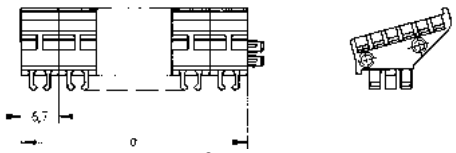 09 33 000 9964 Han® 6 E AV a = 26.8 mm 09 33 000 9965 Han® 10 E AV a = 40.2 mm 09 33 000 9966 Han® 16 E AV a = 60.3 mm 09 33 000 9967 Han® 24 E AV a = 87.4 mm

Contents | Page

Staf®..... **09.2**

Features

- male insert with female contacts
- female insert with male contacts

Technical characteristics

Number of contacts	6, 14, 20, 40
Electrical data acc. to IEC 61984	10 A 25 V 0,8 kV 3
Rated current	10 A
Rated voltage	25 V
Rated impulse voltage	0.8 kV
Pollution degree	3
Rated voltage	25 V AC, 60 V DC
Rated voltage acc. to UL	50 V
Rated voltage acc. to CSA	50 V
Insulation resistance	≥10^{10} Ω
Contact resistance	≤2 mΩ
Limiting temperature	-40 ... +100 °C
Mating cycles	≥500
Material (insert)	Polyamide
Colour (insert)	Black
Material (contacts)	Copper alloy
Material flammability class acc. to UL 94	HB
RoHS	compliant with exemption
RoHS exemptions	**6c:** Copper alloy containing up to 4 % lead by weight

Derating

Current carrying capacity

The current carrying capacity of the connectors is limited by the thermal load capability of the contact element material including the connections and the insulating parts. The derating curve is therefore valid for currents which flow constantly (non-intermittent) through each contact element of the connector evenly, without exceeding the allowed maximum temperature.

Measuring and testing techniques acc. to IEC 60512-5-2

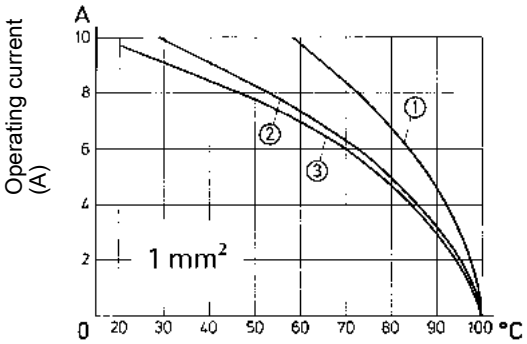

① Staf® 6
② Staf® 14
③ Staf® 20

Specifications and approvals

EN 60664-1
IEC 61984
UL 1977 ECBT2.E235076

Details

In accordance with the appropriate regulations a wire-end sleeve has to be used at clamps without wire protection (see “screw terminal”, chapter 00).

Number of contacts

6

10 A 25 V 0,8 kV 3

Identification	Conductor cross-section (mm²)	Part number Male	Part number Female	Drawing (dimensions in mm)
Staf® , Screw termination, Contact surface: Silver plated 	1,5	09 70 006 2813	09 70 006 2616	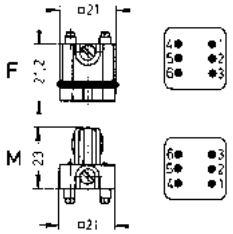 Contact arrangement (view from termination side)
Staf® , Solder termination, Contact surface: Silver plated 	2,5	09 70 006 2812	09 70 006 2615	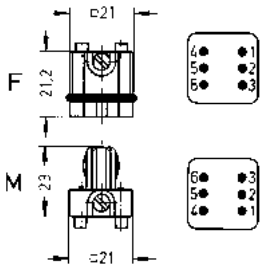 Contact arrangement (view from termination side) 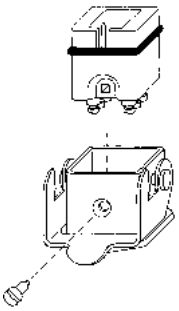 Mounting example

Number of contacts

14

10 A 25 V 0,8 kV 3

Identification	Conductor cross-section (mm²)	Part number Male	Part number Female	Drawing (dimensions in mm)
Staf® , Screw termination, Contact surface: Silver plated 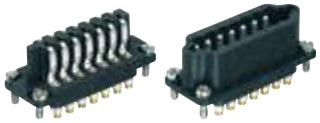	1,5	09 70 014 2811	09 70 014 2614	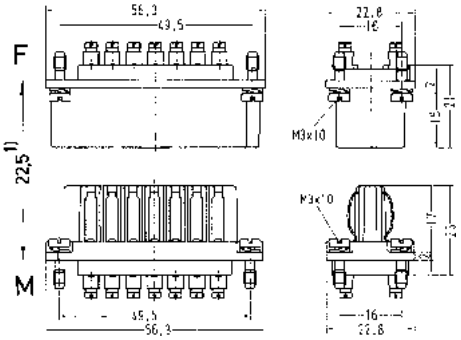 1) distance for contact max. 24 mm
Staf® , Solder termination, Contact surface: Silver plated 	2,5	09 70 014 2810	09 70 014 2613	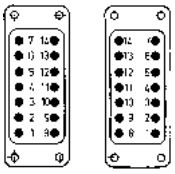 Contact arrangement (view from termination side) 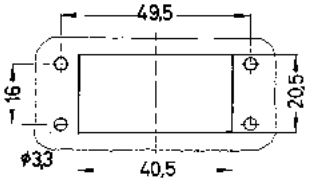 Panel cut out for use without Hoods/Housings

Number of contacts

20

10 A 25 V 0,8 kV 3

Identification	Conductor cross-section (mm²)	Part number Male	Part number Female	Drawing (dimensions in mm)
Staf® , Screw termination, Contact surface: Silver plated 	1,5	09 70 020 2817	09 70 020 2622	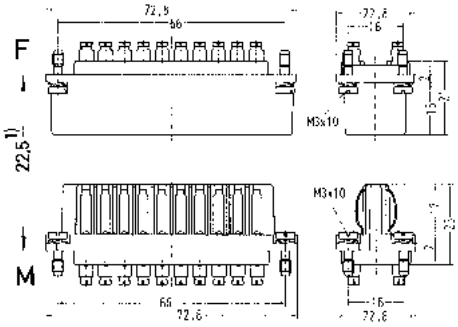 1) distance for contact max. 24 mm
Staf® , Solder termination, Contact surface: Silver plated 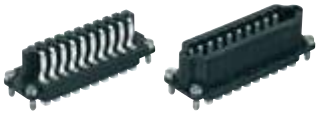	2,5	09 70 020 2816	09 70 020 2621	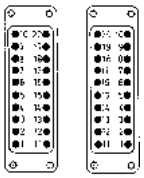 Contact arrangement (view from termination side) 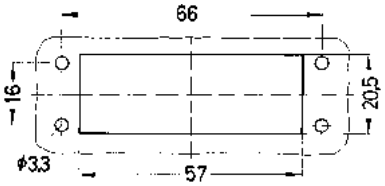 Panel cut out for use without Hoods/Housings

Number of contacts

40

10 A 25 V 0,8 kV 3

Identification	Conductor cross-section (mm²)	Part number Male	Part number Female	Drawing (dimensions in mm)
Staf® , Screw termination, Contact surface: Silver plated 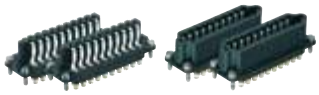 You need two inserts for a complete assembly!	1,5	09 70 020 2817	09 70 020 2622	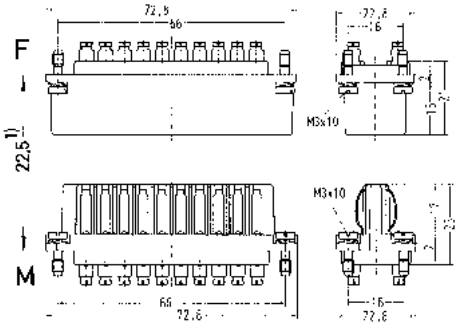 1) distance for contact max. 24 mm
Staf® , Solder termination, Contact surface: Silver plated  You need two inserts for a complete assembly!	2,5	09 70 020 2816	09 70 020 2621	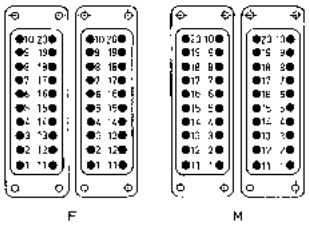 Contact arrangement (view from termination side) 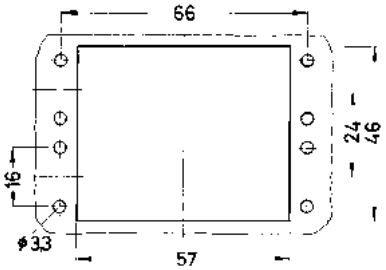 Panel cut out for use without Hoods/Housings

Contents	Page
Latching parts	**11.3**
Plastic panel mounting	**11.5**
Metal panel mounting	**11.6**
Insert mounting	**11.7**
Insert mounting with carrier element	**11.8**
Shell housing	**11.10**
Accessories	**11.15**

Note:
A connector mounted with Han-Snap® elements does not offer finger safe protection to the relevant standards. In this case protection against electric shock must be provided by the installation methods of the user. The fixing of the PE terminal must be conducted on equal side of the connector insert to avoid ground interruptions.

- The Han-Snap® system is ideal for connectors within closed electrical operating environments.
  These can be rooms, cabinets or termination boxes.

- The Han-Snap® components are an innovative design which offer the following advantages and characteristics:
  - reduction of material and assembly costs;
  - fast and easy installation;
  - preassembly of Han connectors;
  - secure and rigid mounting of Han connectors;
  - frequent use of latching systems is possible (up to several thousand cycles).

- The Han-Snap® elements are compatible with the standard inserts and terminal block connectors of the following series (named series Han B as follows)
  - Han D®, 40 and 64 pins
  - Han DD®
  - Han E®
  - Han® EE
  - Han® EEE
  - Han® ES
  - Han Hv E®
  - Han® Hv ES
  - Han® HsB
  - Han-Com®
  - Han-Modular®

- With the Han-Snap® adapter the following standard inserts are compatible (named series Han A as follows):
  - Han D®, 15 and 25 pins
  - Han A®, 10 and 16 pins

- The Han-Snap® elements are a mechanical system for the mounting assembly and security of Han connectors.
  Normally the elements are assembled to the connector insert using the standard insert fixing screws.
  If coding is required the standard fixing screws may be replaced by either code pins or guide pins and bushes.

- On free connectors the wires or cables can be secured to the strain relief element with standard cable ties of 5 mm width maximum.

Han-Snap® on standard rail

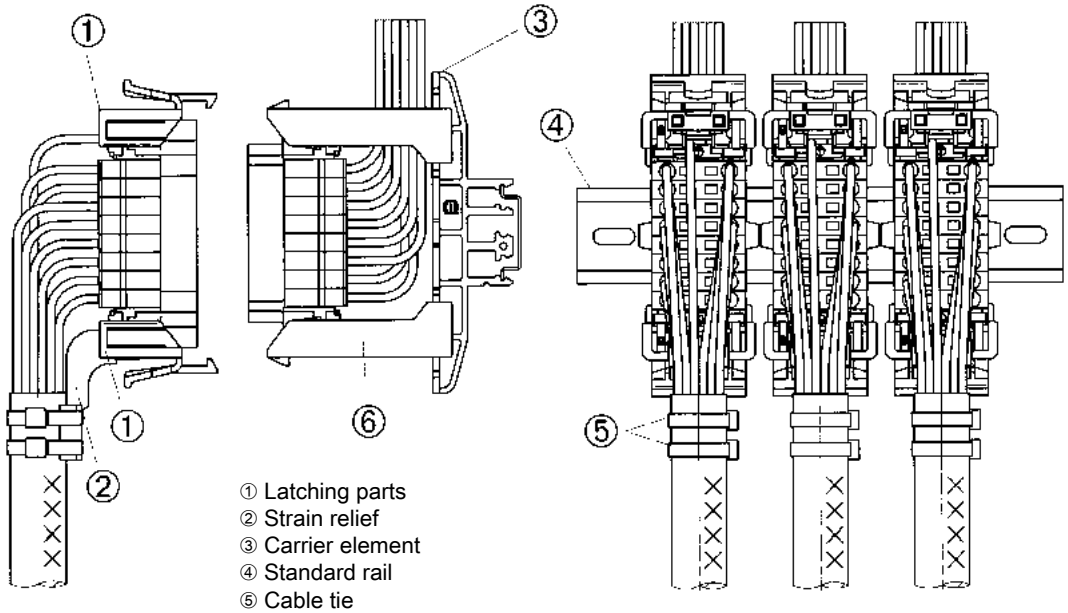

① Latching parts
② Strain relief
③ Carrier element
④ Standard rail
⑤ Cable tie
⑥ Insert mounting



Features

- Compact design saves space
- Practical and easy handling
- Reduction of material and assembly costs

Technical characteristics

Limiting temperature	-40 ... +125 °C
Degree of protection acc. to IEC 60529	IP20
Retention force	200 N Without guiding, 300 N With guiding
Material (accessories)	Polycarbonate
Colour (accessories)	RAL 7032 (pebble grey)
Material flammability class acc. to UL 94	V-0
RoHS	compliant

Specifications and approvals

IEC 60068-2-6
Vibration (sinusoidal)
IEC 60068-2-27
Shock

Details

Inserts can be mounted on the panel mounting part and the latching part with the standard insert mounting screws.

High mechanical security of the fixings.

No functional impairment is caused by slight over tightening of the fixing screws.

Alternatively, Han® coding elements (code pins or guide pins and bushes) may be used.

Label 9 x 20 mm may be fitted in both sides of each latching element. Label 7 x 20 mm may be fitted to the top of the latching part without the strain relief element.

Up to 2 cable ties with max. 5 mm width can be used on the strain relief.

Please note: The strain relief element should be assembled to the latching part at the end of the insert opposite to the ground screw.

Identification	Part number	Drawing (dimensions in mm)
Han-Snap® , Latching parts, Pack contents: 2 latching parts 	09 33 000 9987	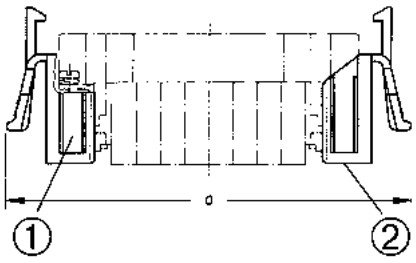 ① Slot for identification strip 9 x 20 ② Slot for identification strip 7 x 20 6 B: a= 78.5 10 B: a= 91.5 16 B: a= 112.5 24 B: a= 138.5

Identification	Part number	Drawing (dimensions in mm)
Han-Snap® , Latching parts, With strain relief, Pack contents: 1 latching part with strain relief, 1 latching part 	09 33 000 9991	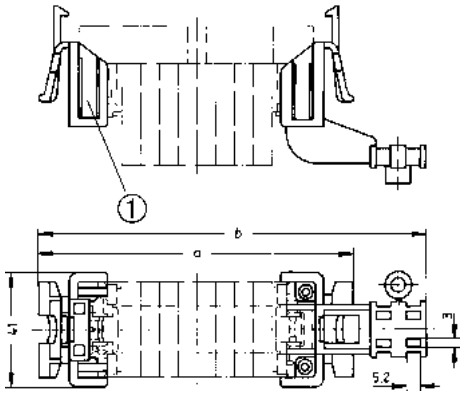 ① Slot for identification strip 9 x 20 6 B: a=78,5; b=105 10 B: a=91,5; b=118 16 B: a=112,5; b=138,5 24 B: a=138,5; b=165
Han-Snap® , Latching parts, With strain relief, and panel mounting parts, Pack contents: 1 latching part with strain relief, 1 panel mounting part 	09 33 000 9990	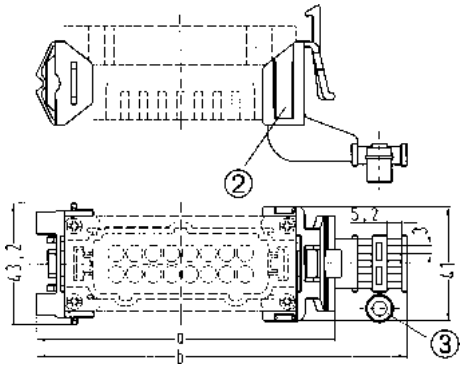 ② Slot for identification strip 9 x 20 ③ Distance bush 6 B: a=75; b=101 10 B: a=88; b=114 16 B: a=108.5; b=134.5 24 B: a=135; b=161

Plastic panel mounting



Features

- Snap element for sheet-metal cut out
- Compact design saves space
- Practical and easy handling
- Reduction of material and assembly costs

Specifications and approvals

IEC 60068-2-6
Vibration (sinusoidal)
IEC 60068-2-27
Shock

Technical characteristics

Limiting temperature	-40 ... +125 °C
Retention force	≥250 N in the sheet-metal cut out
Material (accessories)	Polycarbonate
Colour (accessories)	RAL 7032 (pebble grey)
Material flammability class acc. to UL 94	V-0
RoHS	compliant

Details

Connector inserts and terminal block connectors can be fixed on elements for panel mounting with standard insert mounting screws.

High mechanical security of the fixings. No functional impairment is caused by slight over tightening of the fixing screws.

Alternatively, Han® coding elements (code pins or guide pins and bushes) may be used.

Connector assembly into the panel (sheet-metal) cut out or two parallel mounted rails is possible from mating or termination side.

Identification	Part number	Drawing (dimensions in mm)
Han-Snap® , Panel mounting parts, Pack contents: 2 plastic panel mounting parts sufficient for one insert or terminal block connector  Size 10 A / 16 A by using the corresponding adapter!	09 33 000 9985	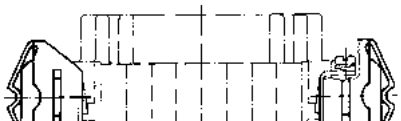 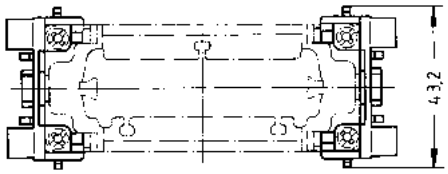 Panel cut out Sheet-metal thickness: 1.3 ... 3 mm 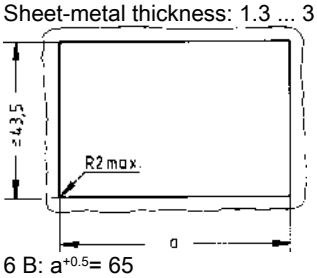 6 B: $a^{+0.5}$= 65 10 B: $a^{+0.5}$= 78 16 B: $a^{+0.5}$= 98 24 B: $a^{+0.5}$= 125 10 A: $a^{+0.5}$= 81,5 16 A: $a^{+0.5}$= 98

Metal panel mounting



Features

- Snap element for sheet-metal cut out
- Compact design saves space
- Practical and easy handling
- Reduction of material and assembly costs

Specifications and approvals

IEC 60068-2-6
Vibration (sinusoidal)
IEC 60068-2-27
Shock

Technical characteristics

Limiting temperature	-40 ... +125 °C
Material (accessories)	Zinc die-cast
RoHS	compliant

Details

Connector inserts and terminal block connectors can be fixed on elements for panel mounting with standard insert mounting screws.

High mechanical security of the fixings.

Alternatively, Han® coding elements (code pins or guide pins and bushes) may be used.

Connector assembly into the panel (sheet-metal) cut out or two parallel mounted rails is possible from mating or termination side.

Identification	Part number	Drawing (dimensions in mm)
Han-Snap® , Panel mounting parts, Pack contents: 2 metallic panel mounting parts sufficient for one insert or terminal block connector 	09 33 000 9984	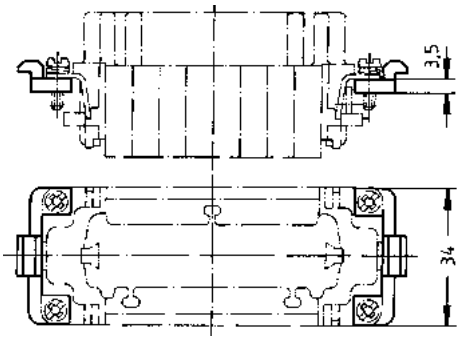 Panel cut out 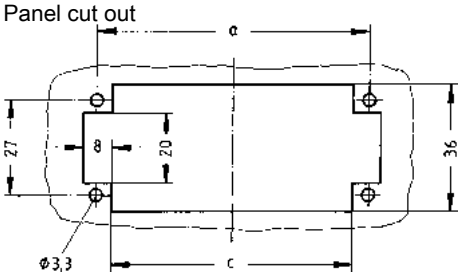 6 B: a=44; c=36 10 B: a=57; c=49 16 B: a=77.5; c=69.5 24 B: a=104; c=96

Insert mounting



Features

- Insert is mounted with carrier element
- A practical solution to fix the insert directly on a standard rail
- Insert can be assembled to Han-Snap® element with screw-driver
- Compact design saves space

Technical characteristics

Limiting temperature	-40 ... +125 °C
Retention force	≥300 N On rail (tension), ≥1.000 N On rail (pressure)
Material (accessories)	Polycarbonate
Colour (accessories)	RAL 7032 (pebble grey)
Material flammability class acc. to UL 94	V-0
RoHS	compliant

Specifications and approvals

IEC 60068-2-6
Vibration (sinusoidal)
IEC 60068-2-27
Shock

Details

The insert mounting locks directly on standard rail 35 x 15 or 35 x 7.5 mm.

Inserts can be assembled on the insert mounting with the standard insert fixing screws.

High mechanical security of the fixings.

No functional impairment is caused by slight over tightening of the fixing screws.

Alternatively, Han® coding elements (code pins or guide pins and bushes) may be used.

The following labels may be fitted alternatively to the insert mounting parts for circuit identification purposes:

Label 7 x 20 mm or 9 x 20 mm

Identification	Part number	Drawing (dimensions in mm)
Han-Snap® , Insert mounting, Pack contents: 2 insert mounting parts  Size 10 A / 16 A by using the corresponding adapter!	09 33 000 9980	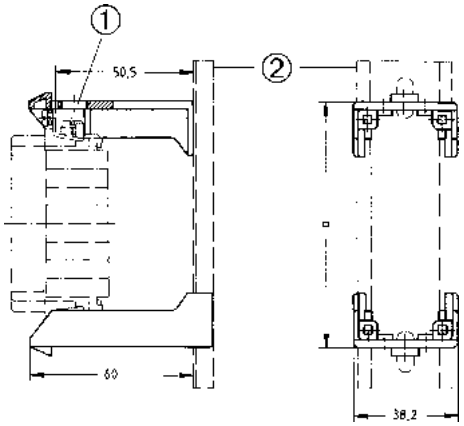 ① Slot for identification strip ② Rail IEC 60715-35 x 7.5 or -35 x 15 6 B: a= 57 10 B: a= 70 / 10 A: a= 74 16 B / 16 A: a= 90.5 24 B: a= 117

Insert mounting with carrier element



Features

- Insert is mounted with carrier element
- A practical solution to fix the insert directly on a standard rail
- Insert can be assembled to Han-Snap® element with screw-driver
- Compact design saves space

Technical characteristics

Limiting temperature	-40 ... +125 °C
Retention force	≥450 N On rail
Material (accessories)	Polycarbonate
Colour (accessories)	RAL 7032 (pebble grey)
Material flammability class acc. to UL 94	V-0
RoHS	compliant

Specifications and approvals

IEC 60068-2-6
Vibration (sinusoidal)
IEC 60068-2-27
Shock

Details

The carrier element is the basic element to mount the inserts in the cross direction on standard rails, for example:

- Caprail, 35 x 7.5 or 35 x 15 acc. to DIN EN 60 715
- C-rail, C 30 acc. to DIN EN 60 715
- G-rail, G 32 acc. to DIN EN 60 715

Where vibration is likely to be encountered, use the 35 x 15 mounting rails. When using the large carrier element, the 35 x 15 mounting rails are recommended to give greater stability.

Insert mounting type 6/10 is suitable for inserts of sizes Han 6 B and Han 10 B.

Insert mounting type 6/24 is suitable for all insert sizes: Han 6 B / 10 B / 16 B / 24 B, Han 16 A with the corresponding adapter.

Inserts can be assembled to the insert mountings with the standard insert mounting screws.

High mechanical security of the fixings. No functional impairment is caused by slight over tightening of the fixing screws.

Alternatively, Han® coding elements (code pins or guide pins and bushes) may be used.

The following labels may be fitted to the insert mounting parts for circuit identification purposes:

Label 7 x 20 mm or 9 x 20 mm

Identification	Part number	Drawing (dimensions in mm)
Han-Snap® , Insert mounting, Swinging, for standard inserts 	09 33 000 9801	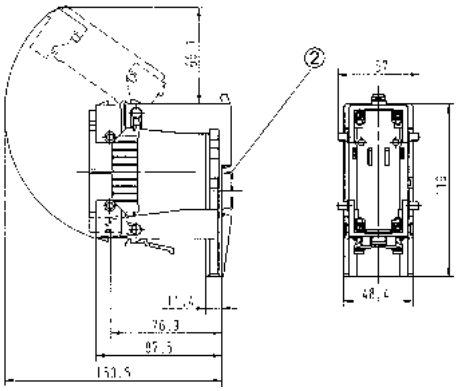 ② Rail IEC 60715-35 x 7.5 or -35 x 15

Insert mounting with carrier element

Identification	Part number	Drawing (dimensions in mm)
Han-Snap® , Insert mounting, Swinging, for Han-Modular® hinged frames 	09 33 000 9803	
Han-Snap® , Insert mounting, With carrier element, Type 6/10, Pack contents: 2 insert mounting parts, 1 carrier element 	09 33 000 9988	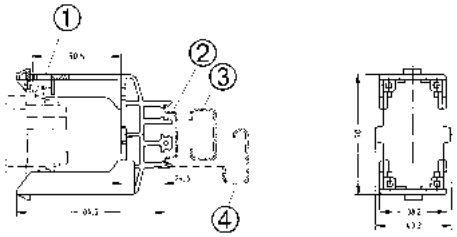 ① Slot for identification strip ② Rail IEC 60715-35 x 7.5 or -35 x 15 ③ C-rail IEC 60715-C30 ④ G-rail IEC 60715-G32
Han-Snap® , Insert mounting, With carrier element, Type 6/24, Pack contents: 2 insert mounting parts, 1 carrier element 	09 33 000 9989	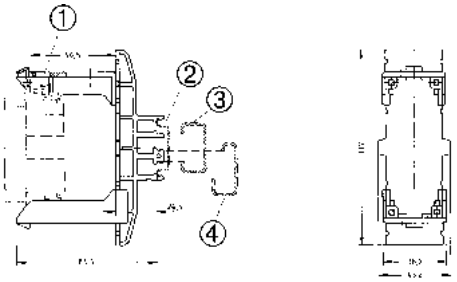 ① Slot for identification strip ② Rail IEC 60715-35 x 7.5 or -35 x 15 ③ C-rail IEC 60715-C30 ④ G-rail IEC 60715-G32

Shell housing

Features

- Ideal for use within closed electrical operation enviroments
- Allows use off preassembled cables
- Optimised cost of material and assembly
- Insert can be assembled to Han-Snap® element with screw-driver

Technical characteristics

Limiting temperature	-40 ... +125 °C
Retention force	≥300 N in locked position
Material (hood/housing)	Polycarbonate
Colour (hood/housing)	RAL 7032 (pebble grey)
Material flammability class acc. to UL 94	V-0
RoHS	compliant

Specifications and approvals

IEC 60068-2-6
Vibration (sinusoidal)
IEC 60068-2-27
Shock

Details

2 identical half shells form a shell housing.

Each housing has 3 cable entries, one on top and one at each end. 2 x cable entries can be closed by enclosed blind plugs.

In the area of cable entries there are rectangular openings for mounting of cable ties up to max. 5 mm width.

In the mating area both housing shells are fixed by the standard insert fixing screws.

To release the half shells use screw driver (3.5 x 0.5).

Alternatively, Han® coding elements (code pins or guide pins and bushings) may be used.

High mechanical security of the fixings.

No functional impairment is caused by slight over tightening of the fixing screws. The blind plugs have slots for identification strips.

The following labels can be fitted: label 7 x 20 mm or 9 x 20 mm

Size 16 A by using the corresponding adapter

Inserts can be assembled to the adapters with the standard insert fixing screws.

With the included screws the adapter can be fixed to the selected Han-Snap® element.

Snap-in latches

Identification	Part number	Drawing (dimensions in mm)
Han-Snap® , Shell housing, Top/side entry, Pack contents: 2 half shells with blind plugs 	09 33 006 0401	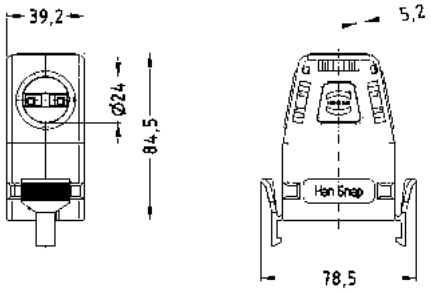
Han-Snap® , Protection cover, Thermoplastic 	09 33 006 5401	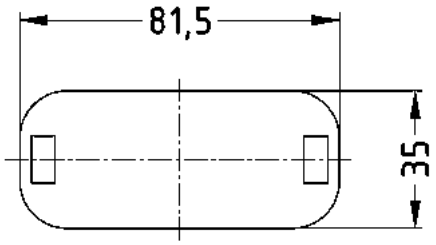

Snap-in latches

Identification	Part number	Drawing (dimensions in mm)
Han-Snap® , Shell housing, Top/side entry, Pack contents: 2 half shells with blind plugs 	09 33 010 0401	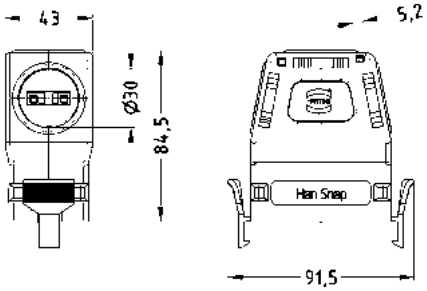
Han-Snap® , Protection cover, Thermoplastic 	09 33 010 5401	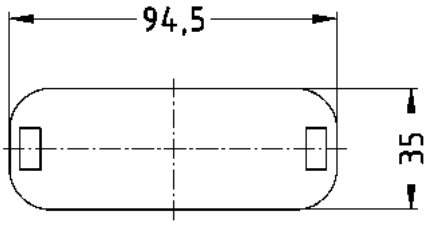

Shell housing

Size 16 B

Snap-in latches

Identification	Part number	Drawing (dimensions in mm)
Han-Snap® , Shell housing, Top/side entry, Pack contents: 2 half shells with blind plugs  Size 16 A by using the corresponding adapter!	09 33 016 0401	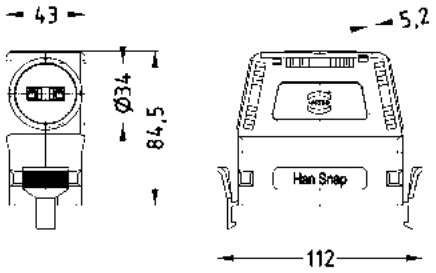
Han-Snap® , Protection cover, Thermoplastic 	09 33 016 5401	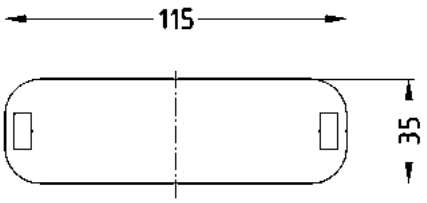

Snap-in latches

Identification	Part number	Drawing (dimensions in mm)
Han-Snap® , Shell housing, Top/side entry, Pack contents: 2 half shells with blind plugs 	09 33 024 0401	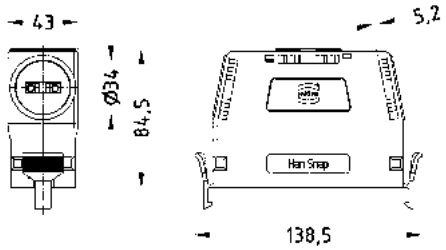
Han-Snap® , Protection cover, Thermoplastic 	09 33 024 5401	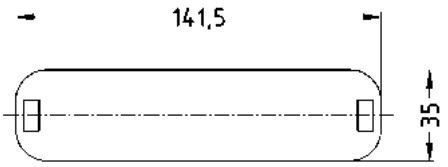

Technical characteristics

RoHS	compliant with exemption

Technical characteristics

RoHS exemptions	**6a:** Lead as an alloying element in steel for machining purposes and in galvanised steel containing up to 0,35 % lead by weight

Identification	Part number Male	Part number Female	Drawing (dimensions in mm)
Coding, With guide pins/bushes, for application “insert with screw adapter” with/ without grip frame  Please order 4 pieces for one connector.	09 33 000 9808	09 33 000 9809	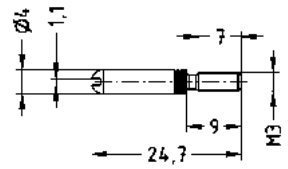 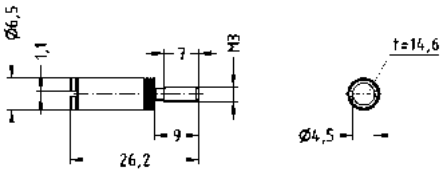
Han-Snap® , Coding, Only for swinging insert mountings 	09 33 000 9956	09 33 000 9957	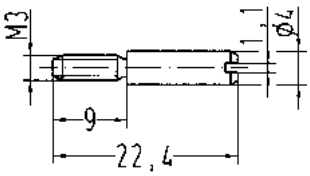 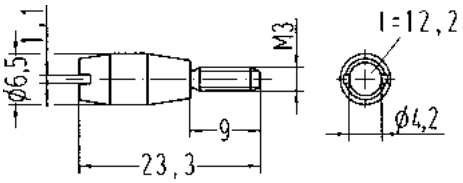

Technical characteristics

Material (accessories)	Polycarbonate

Technical characteristics

Colour (accessories)	RAL 7032 (pebble grey)
RoHS	compliant

Identification	Part number	Drawing (dimensions in mm)
Han A®, Adapter, Pack contents: 2 adapters, 4 fixing screws	09 20 000 9933	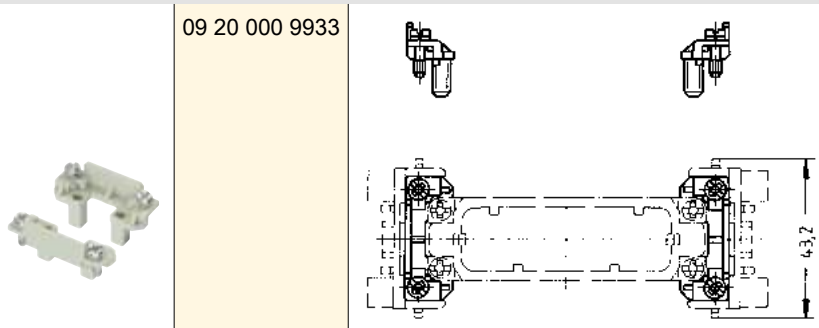
Identification strip, Pack contents: Single	09 33 000 9981	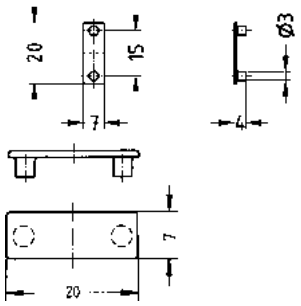
Identification strip, Pack contents: 20 pieces in one block	09 33 000 9982	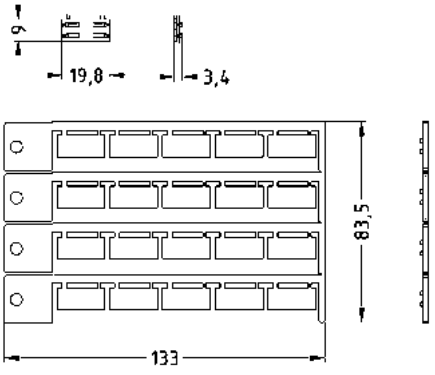

Contents	Page
Sockets	**12.2**
Frames	**12.6**
Data connectors	**12.10**
Wires	**12.15**
Gender changer	**12.18**
Accessories	**12.19**

Features

- Sockets for the European and international market
- Modular assembly
- Sockets to mount or snap into mounting plates

Technical characteristics

Mounting depth	62 mm, 30 mm, 20 mm, 43 mm
Supply voltage	250 V AC, 125 V AC, 240 V AC
Nominal frequency	50 Hz, 60 Hz
Nominal current	16 A, 15 A, 13 A, 5 A, 10 A
Material (hood/housing)	Thermoplastic
RoHS	compliant

Specifications and approvals

CE

Details

for detailed technical characteristics see following pages

Identification	Conductor cross-section (mm²)	Part number	
Han-Port® , Socket, With LED display, Connection at the rear, Screw termination, Germany (VDE) , 62 mm / 250 V AC / 50 Hz / 16 A	6	39 50 001 0001	
Han-Port® , Socket, for assembly in front of main switch, Connection at the rear, Screw termination, Germany (VDE) , 62 mm / 250 V AC / 50 Hz / 16 A	6	39 50 001 0002	
Han-Port® , Socket, Finger safe, Screw termination, USA Japan , 30 mm / 125 V AC / 60 Hz / 15 A	2,5	39 50 001 0004	
Han-Port® , Socket, With LED display, Connection at the rear, Screw termination, France (UTE) , 62 mm / 250 V AC / 50 Hz / 16 A	6	39 50 001 0005	
Han-Port® , Socket, Finger safe, Screw termination, Great Britain (BS) , 30 mm / 250 V AC / 60 Hz, 50 Hz / 13 A	4	39 50 001 0006	
Han-Port® , Socket, Double, Finger safe, Screw termination, Italy (CEI 23-16) , 20 mm / 250 V AC / 50 Hz / 16 A	2,5	39 50 001 0007	

Sockets

Identification	Conductor cross-section (mm²)	Part number	
Han-Port® , Socket, Screw termination, Australia China , 20 mm / 240 V AC / 60 Hz, 50 Hz / 15 A	4	39 50 001 0009	
Han-Port® , Socket, Screw termination, India (IS) , 20 mm / 240 V AC / 50 Hz / 6 A	4	39 50 001 0321	
Han-Port® , Socket, Screw termination, Brazil , 30 mm / 250 V AC / 60 Hz / 10 A	2,5	39 50 001 0331	
Han-Port® , Socket, Screw termination, Israel , 30 mm / 250 V AC / 50 Hz / 16 A	2,5	39 50 001 0333	
Han-Port® , Socket, Spring clamp termination, Switzerland , 30 mm / 250 V AC / 50 Hz / 10 A	1,5	39 50 001 0012	
Han-Port® , Socket, Spring clamp termination, Denmark , 20 mm / 250 V AC / 50 Hz / 13 A	2,5	39 50 001 0017	

Identification	Conductor cross-section (mm²)	Part number	
Han-Port® , Socket, Spring clamp terminal, Screw termination, China , 43 mm / 250 V AC / 50 Hz / 10 A	4	39 50 001 0458	
Han-Port® , Socket, Screw termination, China , 43 mm / 250 V AC / 50 Hz / 10 A 1x RJ45 Cat.6 / 1x USB-A 3.0, enclosed separatly	4	39 50 012 0458	
Han-Port® , Socket, Spring clamp terminal, Spring clamp termination, Germany (VDE) , 43 mm / 250 V AC / 50 Hz / 16 A	2,5	39 50 001 0450	
Han-Port® , Socket, Spring clamp termination, Germany (VDE) , 43 mm / 250 V AC / 50 Hz / 16 A 1x RJ45 Cat.6 / 1x USB-A 3.0, enclosed separatly	2,5	39 50 012 0450	

Features

- Suitable for rough industrial environments (degree of protection IP65 with closed cover)
- Modular assembly
- Various mounting plates with sockets and data interfaces available

Technical characteristics

Limiting temperature	-10 ... +60 °C
Storage temperature	-25 ... +60 °C
Degree of protection acc. to IEC 60529	IP65
Material (hood/housing)	Thermoplastic, Zinc die-cast
Surface (hood/housing)	Smoothed surface
RoHS	compliant

Specifications and approvals

UL 508 NITW2.E472460
CSA-C22.2 No. 14-95 NITW8.E472460

Details

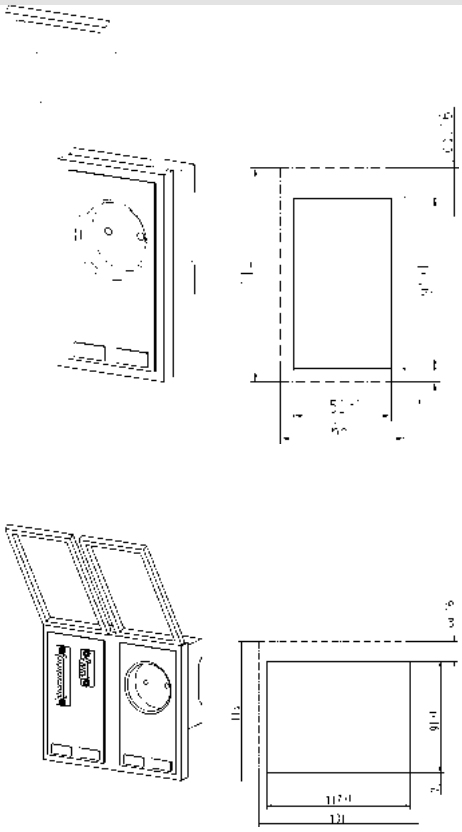

Frames

Identification	Part number	
Han-Port® , Frames, Single, Plastic version, PBT black, Plastic cover, PC transparent	39 50 000 0300	
Han-Port® , Frames, Double, Plastic version, PBT black, Plastic cover, PC transparent	39 50 000 0400	
Han-Port® , Frames, Single, Plastic version, PBT black, Plastic cover, ABS metallic silver	39 50 000 0320	
Han-Port® , Frames, Double, Plastic version, PBT black, Plastic cover, ABS metallic silver	39 50 000 0420	

Frames

Identification	Part number	
Han-Port® , Frames, Single, Metal version, nickel plated (electrically conductive), Transparent plastic cover	39 50 000 0100	
Han-Port® , Frames, Double, Metal version, nickel plated (electrically conductive), Transparent plastic cover	39 50 000 0200	

Identification	Part number	
Han-Port® , Frames, Single, Metal version, nickel plated (electrically conductive), Metal cover, nickel plated	39 50 000 0110	
Han-Port® , Frames, Double, Metal version, nickel plated (electrically conductive), Metal cover, nickel plated	39 50 000 0210	
Han-Port® , Frames, Single, Metal version, CPD black, Metal cover, CPD black	39 50 000 0120	

Features

- Standard interfaces for easy connection of devices
- Modular assembly
- Assembled data connectors to snap into the frame
- Frames with or without shielding plate

Technical characteristics

RoHS	compliant, compliant with exemption
RoHS exemptions	**6c:** Copper alloy containing up to 4 % lead by weight

Specifications and approvals

UL 508, UL 61010 NRAQ2.E253944
CSA-C22.2 No. 142 NRAQ8.E253944

CE

Details

D-Sub: < 125 V AC / 150 V DC / 3 A
Mounting depth 32 mm
RJ45: < 50 V AC/DC / 1 A
Mounting depth 32 mm
USB: < 30 V AC/DC / 1 A
Mounting depth 80 mm

Identification	Part number	
Han-Port® , Data connectors, Without shielding plate, D-Sub 1 (9-pin) female/male gender changer, D-Sub 1 (9-pin) female/male gender changer	39 50 003 0020	
Han-Port® , Data connectors, Without shielding plate, D-Sub 1 (9-pin) female/female gender changer	39 50 003 0024	
Han-Port® , Data connectors, Without shielding plate, D-Sub 1 (9-pin) female/male gender changer, D-Sub 3 (25-pin) female/male gender changer	39 50 003 0040	
Han-Port® , Data connectors, Without shielding plate, D-Sub 3 (25-pin) female/male gender changer	39 50 003 0074	
Han-Port® , Data connectors, Without shielding plate, RJ45 female/female gender changer, 8-pin, metal, Cat. 5e, D-Sub 1 (9-pin) female/female gender changer, D-Sub 1 (9-pin) male/male gender changer	39 50 003 0111	
Han-Port® , Data connectors, Without shielding plate, RJ45 female/female gender changer, 8-pin, metal, Cat. 5e, D-Sub 1 (9-pin) male/male gender changer, D-Sub 1 (9-pin) male/male gender changer, D-Sub 1 (9-pin) male/male gender changer	39 50 003 0129	

Identification	Part number	
Han-Port® , Data connectors, Without shielding plate, RJ45 female/female gender changer, 8-pin, metal, Cat. 5e, D-Sub 1 (9-pin) female/male gender changer, D-Sub 3 (25-pin) female/male gender changer	39 50 003 0170	
Han-Port® , Data connectors, Without shielding plate, D-Sub 1 (15-pin HD) female/male gender changer	39 50 003 0220	

Identification	Part number	
Han-Port® , Data connectors, With shielding plate, USB female/female gender changer, size A according to specification 3.0, USB female/female gender changer, size A according to specification 3.0	39 50 002 0093	
Han-Port® , Data connectors, With shielding plate, USB female/female gender changer, size A according to specification 3.0, RJ45 female/female gender changer, 8-pin, metal, Cat. 5e, D-Sub 1 (9-pin) male/male gender changer, D-Sub 1 (9-pin) male/male gender changer	39 50 002 0117	
Han-Port® , Data connectors, With shielding plate, RJ45 female/female gender changer, 8-pin, metal, Cat. 5e, RJ45 female/female gender changer, 8-pin, metal, Cat. 5e	39 50 002 0120	
Han-Port® , Data connectors, With shielding plate, RJ45 female/female gender changer, 8-pin, metal, Cat. 5e, RJ45 female/female gender changer, 8-pin, metal, Cat. 5e, RJ45 female/female gender changer, 8-pin, metal, Cat. 5e, RJ45 female/female gender changer, 8-pin, metal, Cat. 5e	39 50 002 0122	
Han-Port® , Data connectors, With shielding plate, USB female/female gender changer, size A according to specification 3.0, RJ45 female/female gender changer, 8-pin, metal, Cat. 5e, RJ45 female/female gender changer, 8-pin, metal, Cat. 5e	39 50 002 0133	
Han-Port® , Data connectors, With shielding plate, USB female/female gender changer, size A according to specification 3.0, RJ45 female/female gender changer, 8-pin, metal, Cat. 5e, D-Sub 1 (9-pin) female/male gender changer	39 50 002 0143	

Identification	Part number	
Han-Port® , Data connectors, With shielding plate, USB female/female gender changer, size A according to specification 3.0, RJ45 female/female gender changer, 8-pin, metal, Cat. 5e, D-Sub 3 (25-pin) female/male gender changer	39 50 002 0145	
Han-Port® , Data connectors, With shielding plate, RJ45 female/female gender changer, 8-pin, metal, Cat. 5e, RJ45 female/female gender changer, 8-pin, metal, Cat. 5e, D-Sub 1 (9-pin) female/female gender changer	39 50 002 0163	
Han-Port® , Data connectors, With shielding plate, USB female/female gender changer, size A according to specification 3.0, USB female/female gender changer, size A according to specification 3.0, RJ45 female/female gender changer, 8-pin, metal, Cat. 5e, RJ45 female/female gender changer, 8-pin, metal, Cat. 5e	39 50 004 0097	

D-Sub Standard Male With plastic hood
D-Sub Standard Male With plastic hood

Technical characteristics

Number of cores	9
Connector 1	D-Sub, Standard, Male, With plastic hood
Connector 2	D-Sub, Standard, Male, With plastic hood, Female

Technical characteristics

RoHS	compliant

Details

Other cable lengths on request!

Identification	Cable length	Part number	Drawing (dimensions in mm)
D-Sub , Standard, Copper cable (round), Pre-assembled on both sides, Male/male 	2 m 5 m	39 50 903 0010 39 50 903 0011	
D-Sub , Standard, Copper cable (round), Pre-assembled on both sides, Female/male 	2 m 5 m	39 50 903 0020 39 50 903 0021	

RJ45 Thermoplastic
RJ45 Thermoplastic

Technical characteristics

Number of cores	8
Connector 1	RJ45, Thermoplastic
Connector 2	RJ45, Thermoplastic
Transmission characteristics	Cat. 6, Class E up to 250 MHz
RoHS	compliant

Details

Other cable lengths on request!

Identification	Cable length	Part number	Drawing (dimensions in mm)
RJ45 , Copper cable (round), Pre-assembled on both sides 	2 m 5 m	39 50 903 0060 39 50 903 0061	

USB 2.0 Type A Male
USB 2.0 Type A Male

Technical characteristics

Connector 1	USB 2.0, Type A, Male
Connector 2	USB 2.0, Type A, Male
RoHS	compliant

Details

Other cable lengths on request!

Identification	Cable length	Part number	Drawing (dimensions in mm)
USB , Copper cable (round), Pre-assembled on both sides 	2 m 5 m	39 50 903 0050 39 50 903 0051	

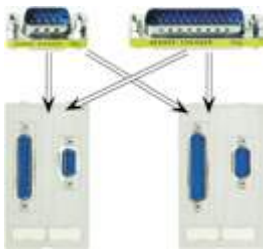

Technical characteristics

RoHS	compliant

Identification	Part number	
Han-Port® , Gender changer, D-Sub 1, 9-pin, Female/female	39 50 904 0030	
Han-Port® , Gender changer, D-Sub 1, 9-pin, Female/male	39 50 904 0031	
Han-Port® , Gender changer, D-Sub 1, 9-pin, Male/male	39 50 904 0032	
Han-Port® , Gender changer, D-Sub 3, 25-pin, Female/female	39 50 904 0050	
Han-Port® , Gender changer, USB female/female gender changer, size A according to specification 3.0	39 50 904 0020	
Han-Port® , Gender changer, RJ45 female/female gender changer, 8-pin, metal, Cat. 5e	39 50 904 0010	

Technical characteristics

RoHS	compliant

Specifications and approvals

UL 508, UL 61010 NRAQ2.E253944
CSA-C22.2 No. 142 NRAQ8.E253944

Identification	Part number	
Han-Port® , Identification strip, Pack contents: 20 pieces per frame	39 50 000 0900	
Han-Port® , Blind plate, With perforated cut-outs for gender changer RJ45, USB and D-Sub 3	39 50 000 0851	
Han-Port® , Blind plate, Free space for self assembly of connectors or switches: 45 x 75 mm	39 50 000 0890	

Han® Q

Contents	Page
Han® Q 2/0 Crimp	**13.2**
Han® Q 2/0 Crimp High Voltage	**13.4**
Han® Q 2/0 Axial screw	**13.6**
Han® Q 2/0 Axial screw High Voltage	**13.8**
Han® Q 3/0 Crimp	**13.10**
Han® Q 4/0 Crimp	**13.12**
Han® Q 4/2 Crimp	**13.14**
Han® Q 4/2 Axial screw	**13.17**
Han® Q 5/0 Quick Lock	**13.19**
Han® Q 5/0 Crimp	**13.21**
Han® Q 7/0 Crimp	**13.24**
Han® Q 8/0 Quick Lock	**13.26**
Han® Q 8/0 Crimp	**13.28**
Han® Q 12/0 Crimp/Quick Lock	**13.31**
Han® Q 17/0 Crimp	**13.34**
Han® Q High Density Crimp	**13.36**
Han® Q Data RJ45	**13.38**
Plastic hoods/housings	**13.40**
Metal hoods / housings	**13.44**
EMC hoods/housings	**13.48**
Accessories	**13.51**

Features

- High current rated compact designed connector
- Mating compatible to the axial screw version
- Suitable for Han® C crimp contacts
- Allows a cost optimised production of high quantities
- Finger safe male and female contacts
- 16 coding options

Technical characteristics

Number of contacts	2
Electrical data acc. to IEC 61984	40 A 400 V 6 kV 3
Rated current	40 A
Rated voltage	400 V
Rated impulse voltage	6 kV
Pollution degree	3
Rated voltage acc. to UL	600 V
Rated voltage acc. to CSA	600 V
Insulation resistance	≥10^{10} Ω
Contact resistance	≤1 mΩ
Limiting temperature	-40 ... +125 °C
Mating cycles	≥500
Material (insert)	Polycarbonate
Colour (insert)	RAL 7032 (pebble grey)
Material (contacts)	Copper alloy
Material (accessories)	Thermoplastic
Material flammability class acc. to UL 94	V-0
RoHS	compliant, compliant with exemption
RoHS exemptions	**6c:** Copper alloy containing up to 4 % lead by weight

Derating

Current carrying capacity

The current carrying capacity of the connectors is limited by the thermal load capability of the contact element material including the connections and the insulating parts. The derating curve is therefore valid for currents which flow constantly (non-intermittent) through each contact element of the connector evenly, without exceeding the allowed maximum temperature.

Measuring and testing techniques acc. to IEC 60512-5-2

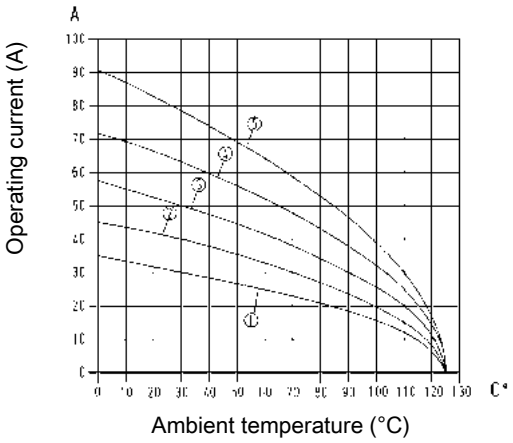

① Conductor cross-section 1.5 mm²
② Conductor cross-section 2.5 mm²
③ Conductor cross-section 4 mm²
④ Conductor cross-section 6 mm²
⑤ Conductor cross-section 10 mm²

Specifications and approvals

EN 60664-1
IEC 61984
UL 1977 ECBT2.E235076
CSA-C22.2 No. 182.3 ECBT8.E235076
UL 2237 PVVA2.E318390
CSA-C22.2 No. 182.3 PVVA8.E318390
DNV GL

Details

Crimping tools see chapter 90

Remarks on the crimp technique

The wire gauges mentioned in the catalogue refer to geometric wire gauges of cables.

Han® Q 2/0 Crimp

Size 3 A

Number of contacts

2+ ⏚

40 A 400 V 6 kV 3

Identification	Conductor cross-section (mm²)	Part number Male	Part number Female	Drawing (dimensions in mm)
Han® Q , 2/0, Crimp termination  Please order crimp contacts separately.	1,5 ... 10	09 12 002 3051	09 12 002 3151	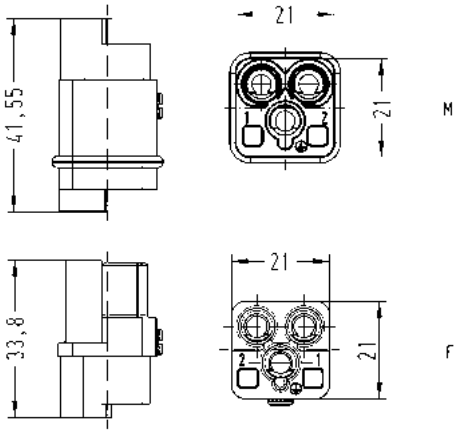 Contact arrangement (view from termination side)
Han® C , Crimp contact, Contact surface: Silver plated 	1,5 2,5 4 6 10	09 32 000 6104 09 32 000 6105 09 32 000 6107 09 32 000 6108 09 32 000 6109	09 32 000 6204 09 32 000 6205 09 32 000 6207 09 32 000 6208 09 32 000 6209	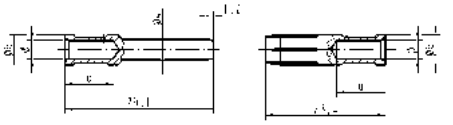 Conductor cross-section / Ø / Stripping length 1.5 mm² AWG 16 / 1.75 mm / 9.5 mm 2.5 mm² AWG 14 / 2.25 mm / 9.5 mm 4 mm² AWG 12 / 2.85 mm / 9.5 mm 6 mm² AWG 10 / 3.5 mm / 9.5 mm 10 mm² AWG 8 / 4.3 mm / 12 mm
Coding element 		09 12 000 9922	09 12 000 9922	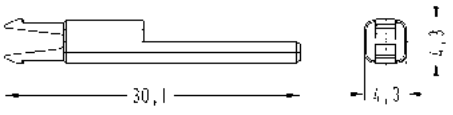

Han® Q 2/0 Crimp High Voltage

Features

- High current rated compact designed connector
- Mating compatible to the axial screw version
- Suitable for Han® C crimp contacts
- Allows a cost optimised production of high quantities
- Finger safe male and female contacts
- 16 coding options
- for high voltages, please use heat shrink tube (included in delivery range)

Technical characteristics

Number of contacts	2
Electrical data acc. to IEC 61984	40 A 830 V 6 kV 3
Rated current	40 A
Rated voltage	830 V
Rated impulse voltage	6 kV
Pollution degree	3
Rated voltage acc. to UL	600 V
Rated voltage acc. to CSA	600 V
Insulation resistance	$\geq 10^{10}$ Ω
Contact resistance	≤1 mΩ
Limiting temperature	-40 ... +125 °C
Mating cycles	≥500
Material (insert)	Polycarbonate
Colour (insert)	RAL 7032 (pebble grey)
Material (contacts)	Copper alloy
Material (accessories)	Thermoplastic
Material flammability class acc. to UL 94	V-0
RoHS	compliant, compliant with exemption
RoHS exemptions	**6c:** Copper alloy containing up to 4 % lead by weight

Derating

Current carrying capacity

The current carrying capacity of the connectors is limited by the thermal load capability of the contact element material including the connections and the insulating parts. The derating curve is therefore valid for currents which flow constantly (non-intermittent) through each contact element of the connector evenly, without exceeding the allowed maximum temperature.

Measuring and testing techniques acc. to IEC 60512-5-2

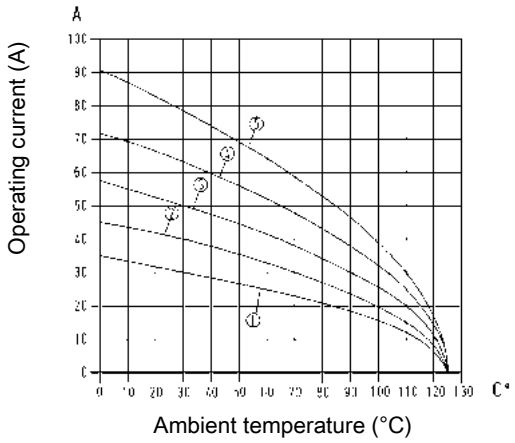

① Conductor cross-section 1.5 mm²
② Conductor cross-section 2.5 mm²
③ Conductor cross-section 4 mm²
④ Conductor cross-section 6 mm²
⑤ Conductor cross-section 10 mm²

Specifications and approvals

EN 60664-1
IEC 61984
UL 1977 ECBT2.E235076
CSA-C22.2 No. 182.3 ECBT8.E235076
DNV GL

Details

Crimping tools see chapter 90

Remarks on the crimp technique

The wire gauges mentioned in the catalogue refer to geometric wire gauges of cables.

Han® Q 2/0 Crimp High Voltage

Size 3 A

Number of contacts

2+ ⏚

40 A 830 V 6 kV 3

Identification	Conductor cross-section (mm²)	Part number Male	Part number Female	Drawing (dimensions in mm)
Han® Q , 2/0 High Voltage, Crimp termination, Pack contents: With heat shrink tube  Please order crimp contacts separately.	1,5 ... 10	09 12 002 3052	09 12 002 3152	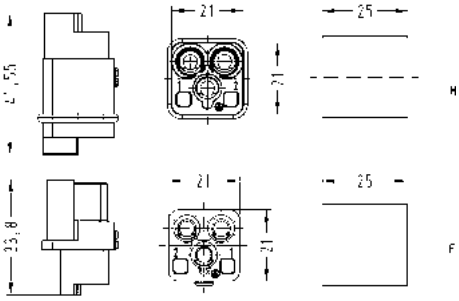 Contact arrangement (view from termination side)
Han® C , Crimp contact, Contact surface: Silver plated 	1,5 2,5 4 6 10	09 32 000 6104 09 32 000 6105 09 32 000 6107 09 32 000 6108 09 32 000 6109	09 32 000 6204 09 32 000 6205 09 32 000 6207 09 32 000 6208 09 32 000 6209	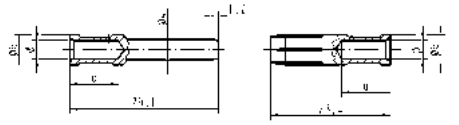 Conductor cross-section / Ø / Stripping length 1.5 mm² AWG 16 — 1.75 mm — 9.5 mm 2.5 mm² AWG 14 — 2.25 mm — 9.5 mm 4 mm² AWG 12 — 2.85 mm — 9.5 mm 6 mm² AWG 10 — 3.5 mm — 9.5 mm 10 mm² AWG 8 — 4.3 mm — 12 mm
Coding element 		09 12 000 9922	09 12 000 9922	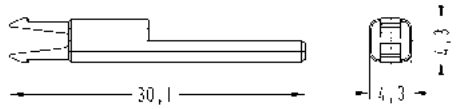

Features

- High current rated compact designed connector
- Mating compatible to the crimp version
- Finger safe male and female contacts
- 16 coding options
- No special tools required for axial-screw termination

Technical characteristics

Number of contacts	2
Electrical data acc. to IEC 61984	40 A 400 V 6 kV 3
Rated current	40 A
Rated voltage	400 V
Rated impulse voltage	6 kV
Pollution degree	3
Rated voltage acc. to UL	400 V
Rated voltage acc. to CSA	400 V
Insulation resistance	≥10^{10} Ω
Contact resistance	≤1 mΩ
Limiting temperature	-40 ... +125 °C
Mating cycles	≥500
Material (insert)	Polycarbonate
Colour (insert)	RAL 7032 (pebble grey)
Material (contacts)	Copper alloy
Material (accessories)	Thermoplastic
Material flammability class acc. to UL 94	V-0
RoHS	compliant with exemption, compliant
RoHS exemptions	**6c:** Copper alloy containing up to 4 % lead by weight

Derating

Current carrying capacity

The current carrying capacity of the connectors is limited by the thermal load capability of the contact element material including the connections and the insulating parts. The derating curve is therefore valid for currents which flow constantly (non-intermittent) through each contact element of the connector evenly, without exceeding the allowed maximum temperature.

Measuring and testing techniques acc. to IEC 60512-5-2

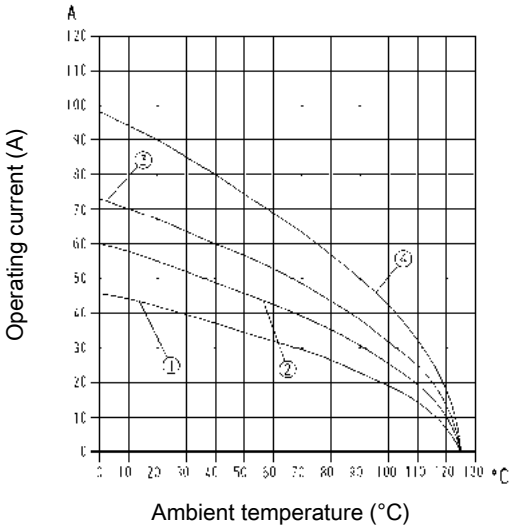

① Conductor cross-section 2.5 mm²
② Conductor cross-section 4 mm²
③ Conductor cross-section 6 mm²
④ Conductor cross-section 10 mm²

Specifications and approvals

EN 60664-1
IEC 61984
UL 1977 ECBT2.E235076
CSA-C22.2 No. 182.3 ECBT8.E235076
DNV GL

Details

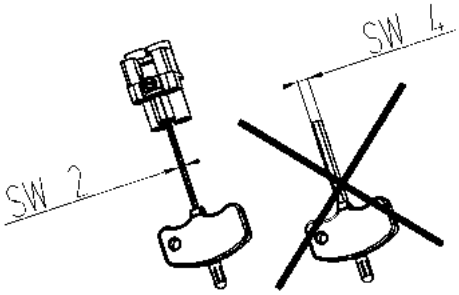

for termination please use only hexagonal screw driver with A/F 2
If PE contact is not used: Please screw the PE contact maximal on both sides clockwise with a hexagonal screwdriver A/F 2.

Han® Q 2/0 Axial screw

Size 3 A

Number of contacts

2+ ⏚

40 A 400 V 6 kV 3

Identification	Conductor cross-section (mm²)	Part number Male	Part number Female	Drawing (dimensions in mm)
Han® Q , 2/0, Axial screw termination, Contact surface: Silver plated 	1,5 ... 2,5 2,5 ... 6 4 ... 10	09 12 002 2655 09 12 002 2653 09 12 002 2651	09 12 002 2755 09 12 002 2753 09 12 002 2751	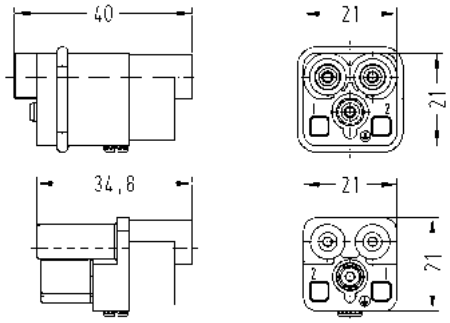 Stripping length 8 ... 9 mm Tightening torque 1.8 Nm
Coding element 		09 12 000 9922	09 12 000 9922	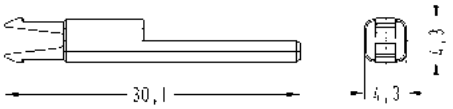

Han® Q 2/0 Axial screw High Voltage

Features

- High current rated compact designed connector
- Mating compatible to the crimp version
- Finger safe male and female contacts
- 16 coding options
- No special tools required for axial-screw termination
- for high voltages, please use heat shrink tube (included in delivery range)

Technical characteristics

Number of contacts	2
Electrical data acc. to IEC 61984	40 A 830 V 6 kV 3
Rated current	40 A
Rated voltage	830 V
Rated impulse voltage	6 kV
Pollution degree	3
Rated voltage acc. to UL	600 V
Rated voltage acc. to CSA	600 V
Insulation resistance	≥10^{10} Ω
Contact resistance	≤1 mΩ
Limiting temperature	-40 ... +125 °C
Mating cycles	≥500
Material (insert)	Polycarbonate
Colour (insert)	RAL 7032 (pebble grey)
Material (contacts)	Copper alloy
Material (accessories)	Thermoplastic
Material flammability class acc. to UL 94	V-0
RoHS	compliant with exemption, compliant
RoHS exemptions	**6c:** Copper alloy containing up to 4 % lead by weight

Derating

Current carrying capacity

The current carrying capacity of the connectors is limited by the thermal load capability of the contact element material including the connections and the insulating parts. The derating curve is therefore valid for currents which flow constantly (non-intermittent) through each contact element of the connector evenly, without exceeding the allowed maximum temperature.

Measuring and testing techniques acc. to IEC 60512-5-2

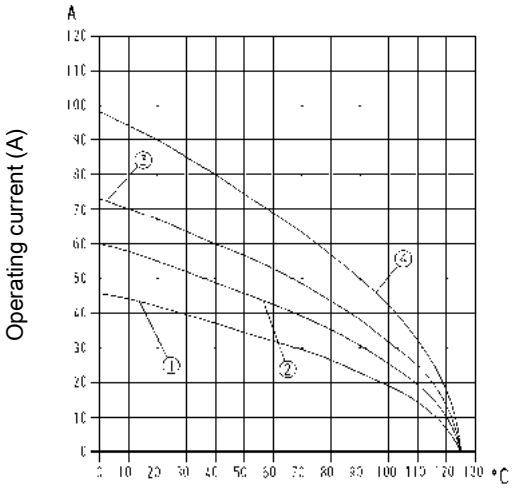

① Conductor cross-section 2.5 mm²
② Conductor cross-section 4 mm²
③ Conductor cross-section 6 mm²
④ Conductor cross-section 10 mm²

Specifications and approvals

EN 60664-1
IEC 61984
UL 1977 ECBT2.E235076
CSA-C22.2 No. 182.3 ECBT8.E235076
DNV GL

Details

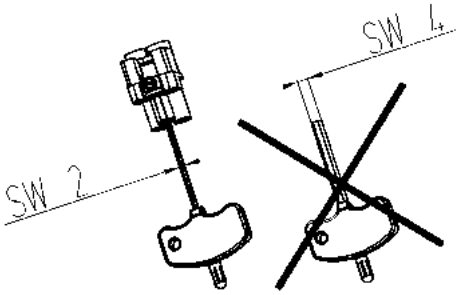

for termination please use only hexagonal screw driver with A/F 2
If PE contact is not used: Please screw the PE contact maximal on both sides clockwise with a hexagonal screwdriver A/F 2.

Han® Q 2/0 Axial screw High Voltage

Size 3 A

Number of contacts

2+ ⏚

40 A 830 V 6 kV 3

Identification	Conductor cross-section (mm²)	Part number Male	Part number Female	Drawing (dimensions in mm)
Han® Q , 2/0 High Voltage, Axial screw termination, Pack contents: With heat shrink tube Contact surface: Silver plated 	1,5 ... 2,5 2,5 ... 6 4 ... 10	09 12 002 2656 09 12 002 2654 09 12 002 2652	09 12 002 2756 09 12 002 2754 09 12 002 2752	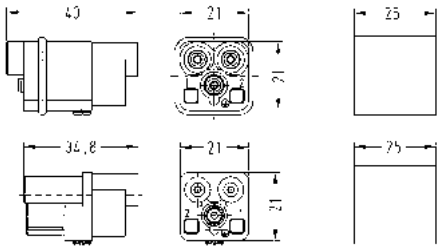 Stripping length 8 ... 9 mm Tightening torque 1.8 Nm
Coding element 		09 12 000 9922	09 12 000 9922	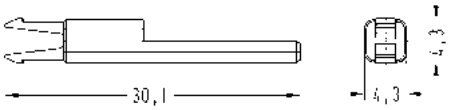

Features

- High current rated compact designed connector
- 4 coding options
- Suitable for Han® C crimp contacts
- Finger safe male and female contacts
- Leading PE crimp contact

Technical characteristics

Number of contacts	3
Electrical data acc. to IEC 61984	40 A 400 V 6 kV 3
Rated current	40 A
Rated voltage	400 V
Rated impulse voltage	6 kV
Pollution degree	3
Insulation resistance	≥10^{10} Ω
Contact resistance	≤1 mΩ
Limiting temperature	-40 ... +125 °C
Mating cycles	≥500
Material (insert)	Polycarbonate
Colour (insert)	RAL 7032 (pebble grey)
Material (contacts)	Copper alloy
Material (accessories)	Thermoplastic
Material flammability class acc. to UL 94	V-0
RoHS	compliant, compliant with exemption
RoHS exemptions	**6c:** Copper alloy containing up to 4 % lead by weight

Derating

Current carrying capacity

The current carrying capacity of the connectors is limited by the thermal load capability of the contact element material including the connections and the insulating parts. The derating curve is therefore valid for currents which flow constantly (non-intermittent) through each contact element of the connector evenly, without exceeding the allowed maximum temperature.

Measuring and testing techniques acc. to IEC 60512-5-2

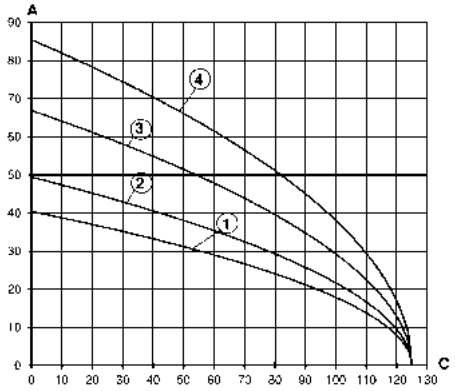

① Conductor cross-section 2.5 mm²
② Conductor cross-section 4 mm²
③ Conductor cross-section 6 mm²
④ Conductor cross-section 10 mm²

Specifications and approvals

EN 60664-1
IEC 61984
UL 1977 ECBT2.E235076
CSA-C22.2 No. 182.3 ECBT8.E235076
UL 2237 PVVA2.E318390
CSA-C22.2 No. 182.3 PVVA8.E318390
DNV GL

Details

Crimping tools see chapter 90

Remarks on the crimp technique

The wire gauges mentioned in the catalogue refer to geometric wire gauges of cables.

Han® Q 3/0 Crimp

Size 3 A

Number of contacts

3+ ⏚

40 A 400 V 6 kV 3

Identification	Conductor cross-section (mm²)	Part number Male	Part number Female	Drawing (dimensions in mm)
Han® Q , 3/0, Crimp termination  Please order crimp contacts separately.	1,5 ... 10	09 12 003 3051	09 12 003 3151	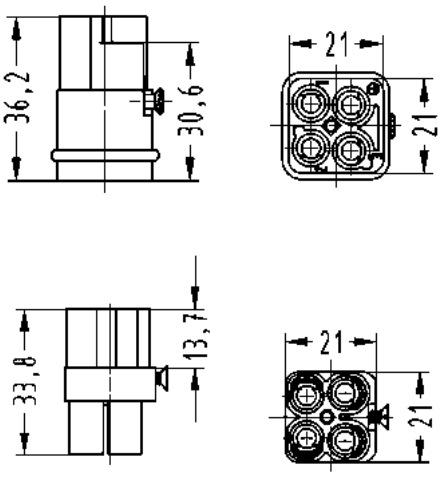
Han® C , Crimp contact, Contact surface: Silver plated 	1,5 2,5 4 6 10	09 32 000 6104 09 32 000 6105 09 32 000 6107 09 32 000 6108 09 32 000 6109	09 32 000 6204 09 32 000 6205 09 32 000 6207 09 32 000 6208 09 32 000 6209	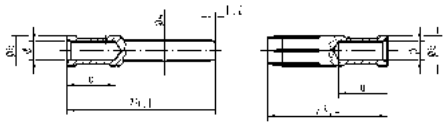 Conductor cross-section / Ø / Stripping length 1.5 mm² AWG 16 / 1.75 mm / 9.5 mm 2.5 mm² AWG 14 / 2.25 mm / 9.5 mm 4 mm² AWG 12 / 2.85 mm / 9.5 mm 6 mm² AWG 10 / 3.5 mm / 9.5 mm 10 mm² AWG 8 / 4.3 mm / 12 mm
Coding element, Pack contents: 20 pieces per frame 		09 12 000 9924	09 12 000 9924	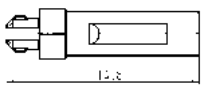

Han® Q 4/0 Crimp

Features

- High current rated compact designed connector
- 4 coding options
- Suitable for Han® C crimp contacts
- Finger safe male and female contacts

Technical characteristics

Number of contacts	4
Electrical data acc. to IEC 61984	40 A 830 V 8 kV 3
Rated current	40 A
Rated voltage	830 V
Rated impulse voltage	8 kV
Pollution degree	3
Insulation resistance	≥10^{10} Ω
Contact resistance	≤1 mΩ
Limiting temperature	-40 ... +125 °C
Mating cycles	≥500
Material (insert)	Polycarbonate
Colour (insert)	RAL 7032 (pebble grey)
Material (contacts)	Copper alloy
Material (accessories)	Thermoplastic
Material flammability class acc. to UL 94	V-0
RoHS	compliant, compliant with exemption
RoHS exemptions	**6c:** Copper alloy containing up to 4 % lead by weight

Derating

Current carrying capacity

The current carrying capacity of the connectors is limited by the thermal load capability of the contact element material including the connections and the insulating parts. The derating curve is therefore valid for currents which flow constantly (non-intermittent) through each contact element of the connector evenly, without exceeding the allowed maximum temperature.

Measuring and testing techniques acc. to IEC 60512-5-2

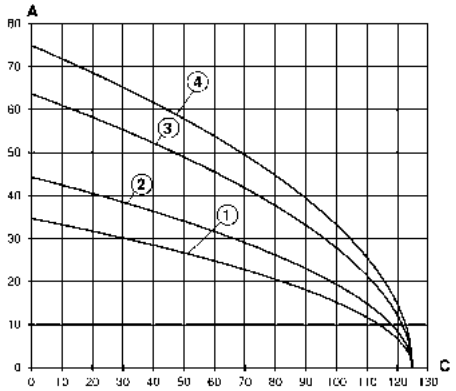

① Conductor cross-section 2.5 mm²
② Conductor cross-section 4 mm²
③ Conductor cross-section 6 mm²
④ Conductor cross-section 10 mm²

Specifications and approvals

EN 60664-1
IEC 61984
UL 1977 ECBT2.E235076
CSA-C22.2 No. 182.3 ECBT8.E235076
UL 2237 PVVA2.E318390
CSA-C22.2 No. 182.3 PVVA8.E318390
DNV GL

Details

Attention! Only for thermoplastic hoods/housings!

Crimping tools see chapter 90

Remarks on the crimp technique

The wire gauges mentioned in the catalogue refer to geometric wire gauges of cables.

Han® Q 4/0 Crimp

Size 3 A

Number of contacts

4

40 A 830 V 8 kV 3

Identification	Conductor cross-section (mm²)	Part number Male	Part number Female	Drawing (dimensions in mm)
Han® Q , 4/0, Crimp termination  Please order crimp contacts separately.	1,5 ... 10	09 12 004 3051	09 12 004 3151	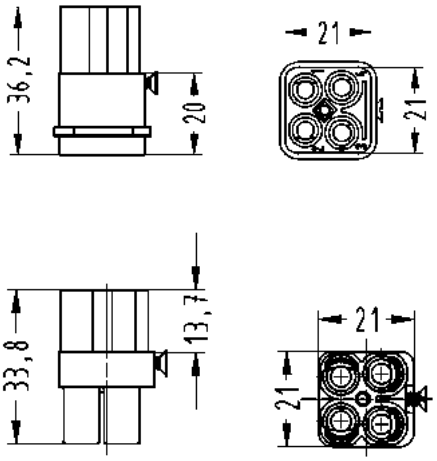
Han® C , Crimp contact, Contact surface: Silver plated 	1,5 2,5 4 6 10	09 32 000 6104 09 32 000 6105 09 32 000 6107 09 32 000 6108 09 32 000 6109	09 32 000 6204 09 32 000 6205 09 32 000 6207 09 32 000 6208 09 32 000 6209	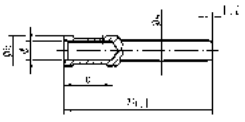 Conductor cross-section / Ø / Stripping length 1.5 mm² AWG 16 — 1.75 mm — 9.5 mm 2.5 mm² AWG 14 — 2.25 mm — 9.5 mm 4 mm² AWG 12 — 2.85 mm — 9.5 mm 6 mm² AWG 10 — 3.5 mm — 9.5 mm 10 mm² AWG 8 — 4.3 mm — 12 mm
Coding element, Pack contents: 20 pieces per frame 		09 12 000 9924	09 12 000 9924	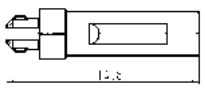

Han® Q 4/2 Crimp

Features

- Han® C power contacts
- Han D® signal contacts
- Finger safe male and female contacts
- Leading PE crimp contact
- Suitable for standard plastic hoods/housings or metal hoods/housings with additional PE terminating contact on the hoods/housings from the Han-Compact® series
- Mating compatible to the axial screw version

Technical characteristics

Number of contacts	4
Additional contacts	+ 2 additional signal contacts
Electrical data acc. to IEC 61984	40 A 400/690 V 6 kV 3
Rated current	40 A
Rated voltage conductor-earth	400 V
Rated voltage conductor-conductor	690 V
Rated impulse voltage	6 kV
Pollution degree	3
Electrical data, signal	10 A 250 V 4 kV 3
Rated current (signal)	10 A
Rated voltage (signal)	250 V
Rated impulse voltage (signal)	4 kV
Pollution degree (signal)	3
Rated voltage acc. to UL	600 V
Rated voltage acc. to UL (signal)	250 V
Rated voltage acc. to CSA	600 V
Rated voltage acc. to CSA (signal)	250 V
Insulation resistance	≥10^{10} Ω
Contact resistance	≤1 mΩ, ≤3 mΩ
Contact resistance, signal area	<3 mΩ
Limiting temperature	-40 ... +125 °C
Mating cycles	≥500
Material (insert)	Polycarbonate
Colour (insert)	RAL 7032 (pebble grey)
Material (contacts)	Copper alloy
Material flammability class acc. to UL 94	V-0
RoHS	compliant, compliant with exemption
RoHS exemptions	**6c:** Copper alloy containing up to 4 % lead by weight

Derating

Current carrying capacity

The current carrying capacity of the connectors is limited by the thermal load capability of the contact element material including the connections and the insulating parts. The derating curve is therefore valid for currents which flow constantly (non-intermittent) through each contact element of the connector evenly, without exceeding the allowed maximum temperature.

Measuring and testing techniques acc. to IEC 60512-5-2

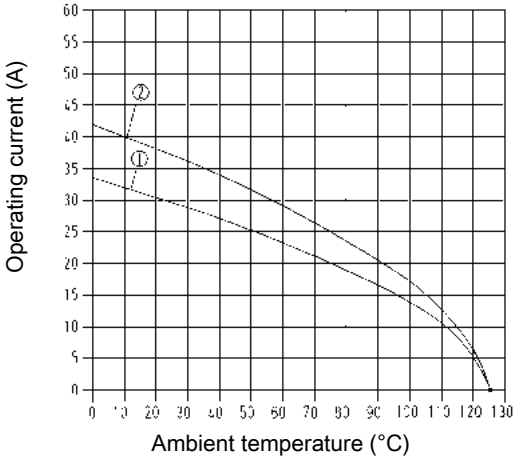

① Conductor cross-section 2.5 mm²
② Conductor cross-section 4 mm²

Specifications and approvals

EN 60664-1
IEC 61984
UL 1977 ECBT2.E235076
CSA-C22.2 No. 182.3 ECBT8.E235076
UL 2237 PVVA2.E318390
CSA-C22.2 No. 182.3 PVVA8.E318390
DNV GL

Details

Contact resistance Han D® crimp contact: ≤ 3 mOhm

Contact resistance Han® C crimp contact: ≤ 1 mOhm

Crimping tools see chapter 90

Remarks on the crimp technique

The wire gauges mentioned in the catalogue refer to geometric wire gauges of cables.

Number of contacts

4+ ⏚

40 A 400/690 V 6 kV 3
+ 2 additional signal contacts
10 A 250 V 4 kV 3

Identification	Conductor cross-section (mm²)	Part number Male	Part number Female	Drawing (dimensions in mm)
Han® Q , 4/2, Crimp termination  Please order crimp contacts separately.	0,14 ... 6	09 12 006 3041	09 12 006 3141	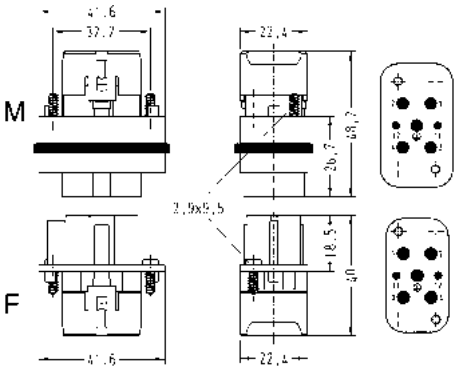 Contact arrangement (view from termination side)
Han® C , Crimp contact, Contact surface: Silver plated 	1,5 2,5 4 6	09 32 000 6104 09 32 000 6105 09 32 000 6107 09 32 000 6108	09 32 000 6204 09 32 000 6205 09 32 000 6207 09 32 000 6208	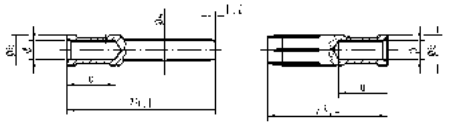
Han D® , Crimp contact, Contact surface: Silver plated 	0,14 ... 0,37 0,5 0,75 1 1,5 2,5	09 15 000 6104 09 15 000 6103 09 15 000 6105 09 15 000 6102 09 15 000 6101 09 15 000 6106	09 15 000 6204 09 15 000 6203 09 15 000 6205 09 15 000 6202 09 15 000 6201 09 15 000 6206	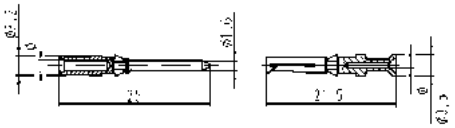

Conductor cross-section		Ø	Stripping length
1.5 mm²	AWG 16	1.75 mm	9.5 mm
2.5 mm²	AWG 14	2.25 mm	9.5 mm
4 mm²	AWG 12	2.85 mm	9.5 mm
6 mm²	AWG 10	3.5 mm	9.5 mm
10 mm²	AWG 8	4.3 mm	12 mm

Wire gauge		Ø	Stripping length
0.14-0.37 mm²	AWG 26-22	0.9 mm	8 mm
0.5 mm²	AWG 20	1.1 mm	8 mm
0.75 mm²	AWG 18	1.3 mm	8 mm
1 mm²	AWG 18	1.45 mm	8 mm
1.5 mm²	AWG 16	1.75 mm	8 mm
2.5 mm²	AWG 14	2.25 mm	6 mm

Identification	Conductor cross-section (mm²)	Part number Male	Part number Female	Drawing (dimensions in mm)
Han D® , Crimp contact, Contact surface: Gold plated 	0,14 ... 0,37 0,5 0,75 1 1,5 2,5	09 15 000 6124 09 15 000 6123 09 15 000 6125 09 15 000 6122 09 15 000 6121 09 15 000 6126	09 15 000 6224 09 15 000 6223 09 15 000 6225 09 15 000 6222 09 15 000 6221 09 15 000 6226	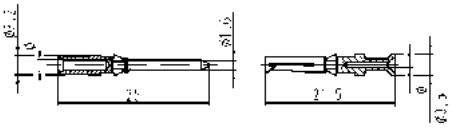

Wire gauge		⌀	Stripping length
0.14-0.37 mm²	AWG 26-22	0.9 mm	8 mm
0.5 mm²	AWG 20	1.1 mm	8 mm
0.75 mm²	AWG 18	1.3 mm	8 mm
1 mm²	AWG 18	1.45 mm	8 mm
1.5 mm²	AWG 16	1.75 mm	8 mm
2.5 mm²	AWG 14	2.25 mm	6 mm

Han® Q 4/2 Axial screw

Features

- Compact design saves space
- No special tools required
- Mating compatible to the crimp version
- Suitable for standard plastic hoods/housings or metal hoods/housings with additional PE terminating contact on the hoods/housings from the Han-Compact® series
- With or without Han-Quick Lock® signal contacts

Technical characteristics

Number of contacts	4
Additional contacts	+ 2 additional signal contacts
Electrical data acc. to IEC 61984	40 A 400/690 V 6 kV 3
Rated current	40 A
Rated voltage conductor-earth	400 V
Rated voltage conductor-conductor	690 V
Rated impulse voltage	6 kV
Pollution degree	3
Electrical data, signal	10 A 250 V 4 kV 3
Rated current (signal)	10 A
Rated voltage (signal)	250 V
Rated impulse voltage (signal)	4 kV
Pollution degree (signal)	3
Insulation resistance	≥10^{10} Ω
Contact resistance	≤0.3 mΩ
Contact resistance, signal area	<3 mΩ
Limiting temperature	-40 ... +125 °C
Mating cycles	≥500
Material (insert)	Polycarbonate
Colour (insert)	RAL 7032 (pebble grey)
Material (contacts)	Copper alloy
Material flammability class acc. to UL 94	V-0
RoHS	compliant with exemption
RoHS exemptions	**6c:** Copper alloy containing up to 4 % lead by weight

Derating

Current carrying capacity

The current carrying capacity of the connectors is limited by the thermal load capability of the contact element material including the connections and the insulating parts. The derating curve is therefore valid for currents which flow constantly (non-intermittent) through each contact element of the connector evenly, without exceeding the allowed maximum temperature.

Measuring and testing techniques acc. to IEC 60512-5-2

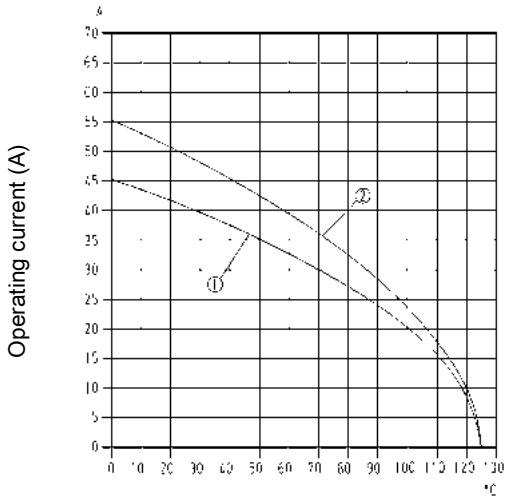

① Conductor cross-section 4 mm²
② Conductor cross-section 6 mm²

Specifications and approvals

EN 60664-1
IEC 61984
UL 1977 ECBT2.E235076
CSA-C22.2 No. 182.3 ECBT8.E235076
DNV GL

Details

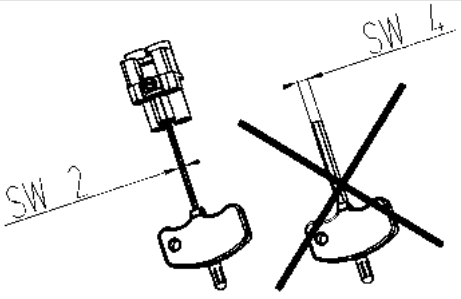

for termination please use only hexagonal screw driver with A/F 2
If PE contact is not used: Please screw the PE contact maximal on both sides clockwise with a hexagonal screwdriver A/F 2.

Han® Q 4/2 Axial screw

Size Han-Compact®

Number of contacts

4+ ⏚

40 A 400/690 V 6 kV 3
+ 2 additional signal contacts
10 A 250 V 4 kV 3



Identification	Conductor cross-section (mm²)	Part number Male	Part number Female	Drawing (dimensions in mm)
Han® Q , 4/2, Axial screw termination, Contact surface: Silver plated  With Han-Quick Lock® signal contacts	2,5 ... 6 4 ... 10	09 12 006 2662 09 12 006 2663	09 12 006 2762 09 12 006 2763	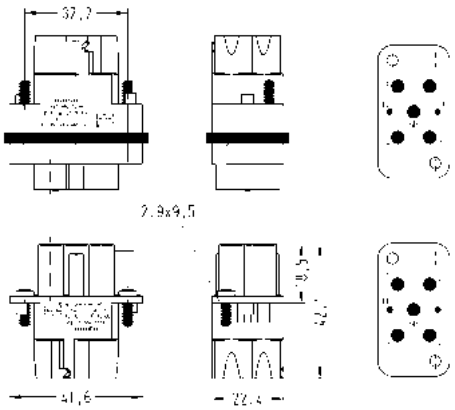 Stripping length Power contacts 8 mm Stripping length Signal contacts 10 mm Tightening torque 1.8 Nm
Han® Q , 4/2, Axial screw termination, Contact surface: Silver plated Without signal contacts	2,5 ... 6 4 ... 10	09 12 006 2665 09 12 006 2666	09 12 006 2765 09 12 006 2766	

Features

- Innovative Han-Quick Lock® termination with reduced wiring times
- No special tools required
- Mating compatible to the crimp version
- Vibration and shock resistant

Technical characteristics

Number of contacts	5
Electrical data acc. to IEC 61984	16 A 230/400 V 4 kV 3
Rated current	16 A
Rated voltage conductor-earth	230 V
Rated voltage conductor-conductor	400 V
Rated impulse voltage	4 kV
Pollution degree	3
Rated voltage acc. to UL	600 V
Rated voltage acc. to CSA	600 V
Insulation resistance	≥10^{10} Ω
Contact resistance	≤1 mΩ
Limiting temperature	-40 ... +125 °C
Mating cycles	≥500
Material (insert)	Polycarbonate
Colour (insert)	RAL 7032 (pebble grey)
Material (contacts)	Copper alloy
Material flammability class acc. to UL 94	V-0
RoHS	compliant with exemption
RoHS exemptions	**6c:** Copper alloy containing up to 4 % lead by weight

Derating

Current carrying capacity

The current carrying capacity of the connectors is limited by the thermal load capability of the contact element material including the connections and the insulating parts. The derating curve is therefore valid for currents which flow constantly (non-intermittent) through each contact element of the connector evenly, without exceeding the allowed maximum temperature.

Measuring and testing techniques acc. to IEC 60512-5-2

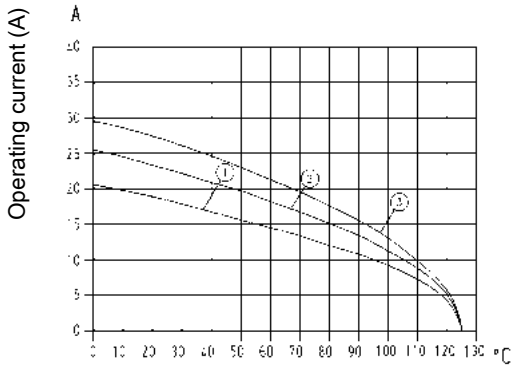

① Conductor cross-section 1 mm²
② Conductor cross-section 1.5 mm²
③ Conductor cross-section 2.5 mm²

Specifications and approvals

EN 60664-1
IEC 61984
UL 1977 ECBT2.E235076
CSA-C22.2 No. 182.3 ECBT8.E235076
DNV GL

Han® Q 5/0 Quick Lock

Size 3 A

Number of contacts

5+ ⏚

16 A 230/400 V 4 kV 3

Identification	Conductor cross-section (mm²)	Part number Male	Part number Female	Drawing (dimensions in mm)
Han® Q , 5/0, Han-Quick Lock® termination, Contact surface: Silver plated  Blue slide	0,5 ... 2,5	09 12 005 2633	09 12 005 2733	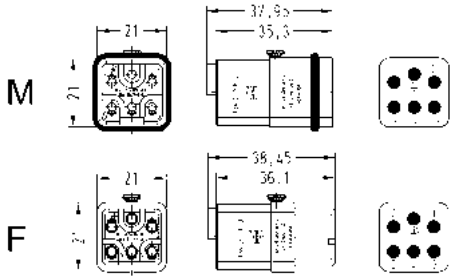 Stripping length 10 mm
Han® Q , 5/0, Han-Quick Lock® termination, Contact surface: Silver plated  Black slide	0,25 ... 1,5	09 12 005 2634	09 12 005 2734	

Features

- Compact design saves space
- Suitable for Han E® crimp contacts
- 32 coding options without loss of contacts

Technical characteristics

Number of contacts	5
Electrical data acc. to IEC 61984	16 A 230/400 V 4 kV 3
Rated current	16 A
Rated voltage conductor-earth	230 V
Rated voltage conductor-conductor	400 V
Rated impulse voltage	4 kV
Pollution degree	3
Insulation resistance	≥10^{10} Ω
Contact resistance	≤1 mΩ
Limiting temperature	-40 ... +125 °C
Mating cycles	≥500
Material (insert)	Polycarbonate
Colour (insert)	RAL 7032 (pebble grey)
Material (contacts)	Copper alloy
Material (accessories)	Polyamide
Colour (accessories)	Red
Material flammability class acc. to UL 94	V-0
RoHS	compliant with exemption
RoHS exemptions	**6c:** Copper alloy containing up to 4 % lead by weight

Derating

Current carrying capacity

The current carrying capacity of the connectors is limited by the thermal load capability of the contact element material including the connections and the insulating parts. The derating curve is therefore valid for currents which flow constantly (non-intermittent) through each contact element of the connector evenly, without exceeding the allowed maximum temperature.

Measuring and testing techniques acc. to IEC 60512-5-2

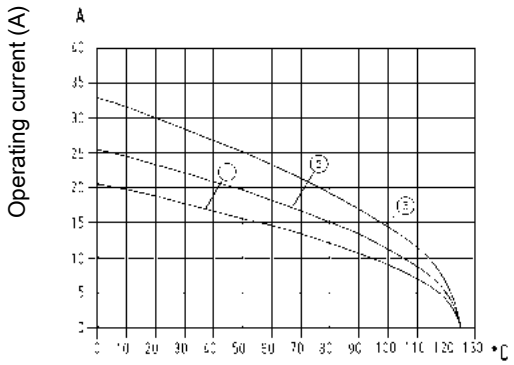

Ambient temperature (°C)

① Conductor cross-section 1 mm²
② Conductor cross-section 1.5 mm²
③ Conductor cross-section 2.5 mm²

Specifications and approvals

EN 60664-1
IEC 61984
UL 1977 ECBT2.E235076
CSA-C22.2 No. 182.3 ECBT8.E235076
DNV GL

Details

Crimping tools see chapter 90

Remarks on the crimp technique

The wire gauges mentioned in the catalogue refer to geometric wire gauges of cables.

Coding pin

Use of the coding pin prevents incorrect mating to other connectors of the same type. The male pin should be omitted from the opposing cavity in the male insert.

Number of contacts

5+ ⏚

16 A 230/400 V 4 kV 3

Identification	Conductor cross-section (mm²)	Part number Male	Part number Female	Drawing (dimensions in mm)
Han® Q , 5/0, Crimp termination  Please order crimp contacts separately. Please order coding pins separately.	0,14 ... 2,5	09 12 005 3004	09 12 005 3104	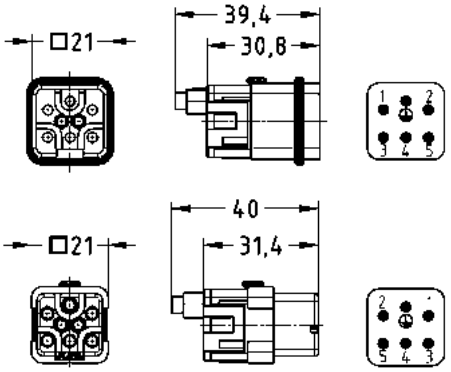 Contact arrangement (view from mating side)
Han E® , Crimp contact, Contact surface: Silver plated 	0,14 ... 0,37 0,5 0,75 1 1,5 2,5	09 33 000 6127 09 33 000 6121 09 33 000 6114 09 33 000 6105 09 33 000 6104 09 33 000 6102	09 33 000 6227 09 33 000 6220 09 33 000 6214 09 33 000 6205 09 33 000 6204 09 33 000 6202	
Han E® , Crimp contact, Contact surface: Gold plated 	0,14 ... 0,37 0,5 0,75 1 1,5 2,5	09 33 000 6117 09 33 000 6122 09 33 000 6115 09 33 000 6118 09 33 000 6116 09 33 000 6123	09 33 000 6217 09 33 000 6222 09 33 000 6215 09 33 000 6218 09 33 000 6216 09 33 000 6223	
Han E® , Crimp contact, Relay contact , Contact surface: Silver plated 	0,75 ... 1 1,5 2,5	09 33 000 6109 09 33 000 6110 09 33 000 6111		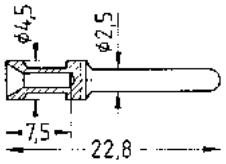

Conductor cross-section		Identification
0.14-0.37 mm²	AWG 26-22	no groove
0.5 mm²	AWG 20	no groove
0.75 mm²	AWG 18	1 groove*
1 mm²	AWG 18	1 groove
1.5 mm²	AWG 16	2 grooves
2.5 mm²	AWG 14	3 grooves
3 mm²	AWG 12	wide groove
4 mm²	AWG 12	no groove
* on the back crimp collar		

Stripping length 7.5 mm

Identification	Conductor cross-section (mm²)	Part number Male	Part number Female	Drawing (dimensions in mm)
FO contact, for 1 mm plastic fibre 		20 10 001 3311	20 10 001 3321	 Crimp zone
Coding element, Pack contents: 20 pieces per frame 		09 12 000 9927	09 12 000 9927	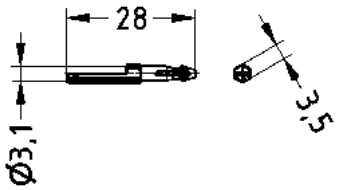

Features

- Compact design saves space
- Suitable for Han D® crimp contacts
- 6 coding options

Technical characteristics

Number of contacts	7
Electrical data acc. to IEC 61984	10 A 400 V 6 kV 3
Rated current	10 A
Rated voltage	400 V
Rated impulse voltage	6 kV
Pollution degree	3
Rated voltage acc. to UL	600 V
Rated voltage acc. to CSA	600 V
Insulation resistance	≥10^{10} Ω
Contact resistance	≤3 mΩ
Limiting temperature	-40 ... +125 °C
Mating cycles	≥500
Material (insert)	Polycarbonate
Colour (insert)	RAL 7032 (pebble grey)
Material (contacts)	Copper alloy
Material (accessories)	Thermoplastic
Material flammability class acc. to UL 94	V-0
RoHS	compliant with exemption, compliant
RoHS exemptions	**6c:** Copper alloy containing up to 4 % lead by weight

Derating

Current carrying capacity

The current carrying capacity of the connectors is limited by the thermal load capability of the contact element material including the connections and the insulating parts. The derating curve is therefore valid for currents which flow constantly (non-intermittent) through each contact element of the connector evenly, without exceeding the allowed maximum temperature.

Measuring and testing techniques acc. to IEC 60512-5-2

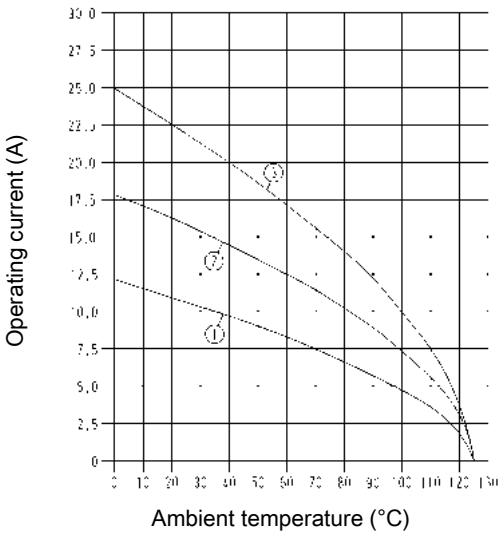

① Conductor cross-section 0.75 mm²
② Conductor cross-section 1.5 mm²
③ Conductor cross-section 2.5 mm²

Specifications and approvals

EN 60664-1
IEC 61984
UL 1977 ECBT2.E235076
CSA-C22.2 No. 182.3 ECBT8.E235076
UL 2237 PVVA2.E318390
CSA-C22.2 No. 182.3 PVVA8.E318390
DNV GL

Details

Crimping tools see chapter 90

Remarks on the crimp technique

The wire gauges mentioned in the catalogue refer to geometric wire gauges of cables.

Han® Q 7/0 Crimp

Size 3 A

Number of contacts

7+ ⏚

10 A 400 V 6 kV 3

Identification	Conductor cross-section (mm²)	Part number Male	Part number Female	Drawing (dimensions in mm)
Han® Q , 7/0, Crimp termination  Please order crimp contacts separately.	0,14 ... 2,5	09 12 007 3001	09 12 007 3101	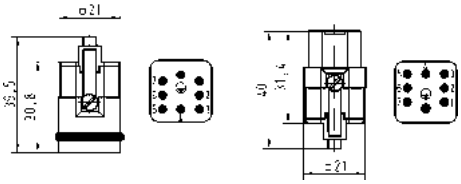 Contact arrangement (view from termination side)
Han D® , Crimp contact, Contact surface: Silver plated 	0,14 ... 0,37 0,5 0,75 1 1,5 2,5	09 15 000 6104 09 15 000 6103 09 15 000 6105 09 15 000 6102 09 15 000 6101 09 15 000 6106	09 15 000 6204 09 15 000 6203 09 15 000 6205 09 15 000 6202 09 15 000 6201 09 15 000 6206	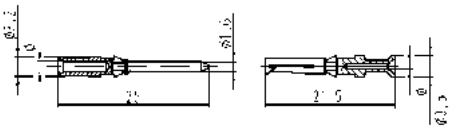
Han D® , Crimp contact, Contact surface: Gold plated 	0,14 ... 0,37 0,5 0,75 1 1,5 2,5	09 15 000 6124 09 15 000 6123 09 15 000 6125 09 15 000 6122 09 15 000 6121 09 15 000 6126	09 15 000 6224 09 15 000 6223 09 15 000 6225 09 15 000 6222 09 15 000 6221 09 15 000 6226	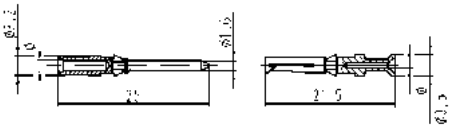
FO contact, for 1 mm plastic fibre 		20 10 001 3211	20 10 001 3221	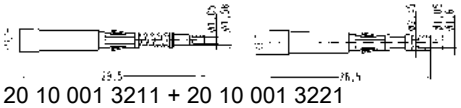 20 10 001 3211 + 20 10 001 3221
Coding element 		09 12 000 9901	09 12 000 9902	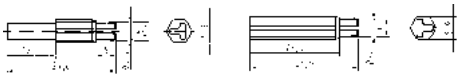

Wire gauge		⌀	Stripping length
0.14-0.37 mm²	AWG 26-22	0.9 mm	8 mm
0.5 mm²	AWG 20	1.1 mm	8 mm
0.75 mm²	AWG 18	1.3 mm	8 mm
1 mm²	AWG 18	1.45 mm	8 mm
1.5 mm²	AWG 16	1.75 mm	8 mm
2.5 mm²	AWG 14	2.25 mm	6 mm

Wire gauge		⌀	Stripping length
0.14-0.37 mm²	AWG 26-22	0.9 mm	8 mm
0.5 mm²	AWG 20	1.1 mm	8 mm
0.75 mm²	AWG 18	1.3 mm	8 mm
1 mm²	AWG 18	1.45 mm	8 mm
1.5 mm²	AWG 16	1.75 mm	8 mm
2.5 mm²	AWG 14	2.25 mm	6 mm

Han® Q 8/0 Quick Lock

Features

- Innovative Han-Quick Lock® termination with reduced wiring times
- No special tools required
- Mating compatible to the crimp version
- Suitable for standard plastic hoods/housings or metal hoods/housings with additional PE terminating contact on the hoods/housings from the Han-Compact® series
- Leading PE crimp contact

Technical characteristics

Number of contacts	8
Electrical data acc. to IEC 61984	16 A 500 V 6 kV 3
Rated current	16 A
Rated voltage	500 V
Rated impulse voltage	6 kV
Pollution degree	3
Rated voltage acc. to UL	600 V
Rated voltage acc. to CSA	600 V
Insulation resistance	≥10^{10} Ω
Contact resistance	≤3 mΩ
Limiting temperature	-40 ... +125 °C
Mating cycles	≥500
Material (insert)	Polycarbonate
Colour (insert)	RAL 7032 (pebble grey)
Material (contacts)	Copper alloy
Material flammability class acc. to UL 94	V-0
RoHS	compliant with exemption
RoHS exemptions	**6c:** Copper alloy containing up to 4 % lead by weight

Derating

Current carrying capacity

The current carrying capacity of the connectors is limited by the thermal load capability of the contact element material including the connections and the insulating parts. The derating curve is therefore valid for currents which flow constantly (non-intermittent) through each contact element of the connector evenly, without exceeding the allowed maximum temperature.

Measuring and testing techniques acc. to IEC 60512-5-2

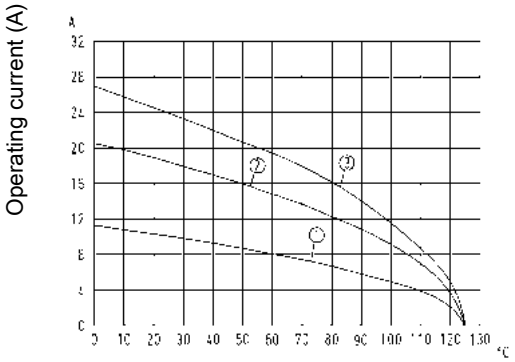

① Conductor cross-section 0.5 mm²
② Conductor cross-section 1.5 mm²
③ Conductor cross-section 2.5 mm²

Specifications and approvals

EN 60664-1
IEC 61984
UL 1977 ECBT2.E235076
CSA-C22.2 No. 182.3 ECBT8.E235076
DNV GL

Number of contacts

8+ ⏚

16 A 500 V 6 kV 3

Identification	Conductor cross-section (mm²)	Part number Male	Part number Female	Drawing (dimensions in mm)
Han® Q , 8/0, Han-Quick Lock® termination, Contact surface: Silver plated  Blue slide	0,5 ... 2,5	09 12 008 2633	09 12 008 2733	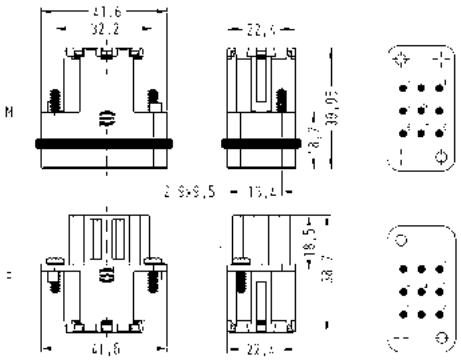 Stripping length 10 mm
Han® Q , 8/0, Han-Quick Lock® termination, Contact surface: Silver plated Black slide	0,25 ... 1,5	09 12 008 2634	09 12 008 2734	

Features

- Compact design saves space
- Suitable for Han E® crimp contacts
- Leading PE crimp contact
- ISO 23570 / DESINA conform product

Technical characteristics

Number of contacts	8
Electrical data acc. to IEC 61984	16 A 500 V 6 kV 3
Rated current	16 A
Rated voltage	500 V
Rated impulse voltage	6 kV
Pollution degree	3
Rated voltage acc. to UL	600 V
Rated voltage acc. to CSA	600 V
Insulation resistance	≥10^{10} Ω
Contact resistance	≤1 mΩ
Limiting temperature	-40 ... +125 °C
Mating cycles	≥500
Material (insert)	Polycarbonate
Colour (insert)	RAL 7032 (pebble grey)
Material (contacts)	Copper alloy
Material (accessories)	Thermoplastic
Material flammability class acc. to UL 94	V-0
RoHS	compliant, compliant with exemption
RoHS exemptions	**6c:** Copper alloy containing up to 4 % lead by weight

Derating

Current carrying capacity

The current carrying capacity of the connectors is limited by the thermal load capability of the contact element material including the connections and the insulating parts. The derating curve is therefore valid for currents which flow constantly (non-intermittent) through each contact element of the connector evenly, without exceeding the allowed maximum temperature.

Measuring and testing techniques acc. to IEC 60512-5-2

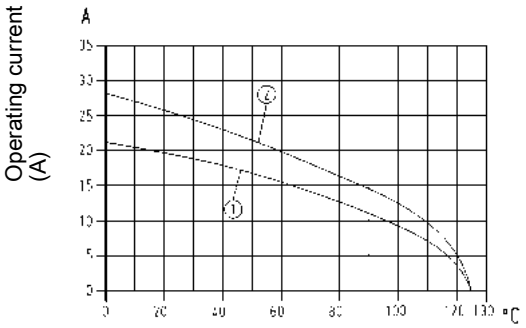

Ambient temperature (°C)

① Conductor cross-section 1.5 mm²
② Conductor cross-section 2.5 mm²

Specifications and approvals

EN 60664-1
IEC 61984
UL 1977 ECBT2.E235076
CSA-C22.2 No. 182.3 ECBT8.E235076
UL 2237 PVVA2.E318390
CSA-C22.2 No. 182.3 PVVA8.E318390
DNV GL

Details

Crimping tools see chapter 90

Remarks on the crimp technique

The wire gauges mentioned in the catalogue refer to geometric wire gauges of cables.

Coding pin

Use of the coding pin prevents incorrect mating to other connectors of the same type. The male pin should be omitted from the opposing cavity in the male insert.

Number of contacts

8+ ⏚

16 A 500 V 6 kV 3

Identification	Conductor cross-section (mm²)	Part number Male	Part number Female	Drawing (dimensions in mm)
Han® Q , 8/0, Crimp termination  Please order crimp contacts separately.	0,14 ... 4	09 12 008 3001	09 12 008 3101	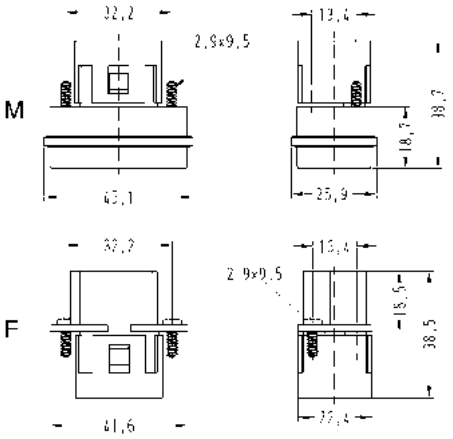 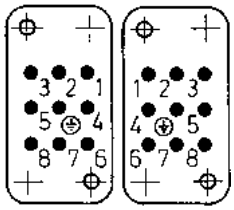 Contact arrangement (view from termination side)
Han E® , Crimp contact, Contact surface: Silver plated 	0,14 ... 0,37 0,5 0,75 1 1,5 2,5 3 4	09 33 000 6127 09 33 000 6121 09 33 000 6114 09 33 000 6105 09 33 000 6104 09 33 000 6102 09 33 000 6106 09 33 000 6107	09 33 000 6227 09 33 000 6220 09 33 000 6214 09 33 000 6205 09 33 000 6204 09 33 000 6202 09 33 000 6206 09 33 000 6207	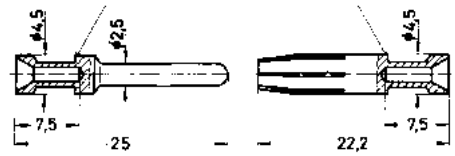 Stripping length 7.5 mm

Conductor cross-section		Identification
0.14-0.37 mm²	AWG 26-22	no groove
0.5 mm²	AWG 20	no groove
0.75 mm²	AWG 18	1 groove*
1 mm²	AWG 18	1 groove
1.5 mm²	AWG 16	2 grooves
2.5 mm²	AWG 14	3 grooves
3 mm²	AWG 12	wide groove
4 mm²	AWG 12	no groove
* on the back crimp collar		

Identification	Conductor cross-section (mm²)	Part number Male	Part number Female	Drawing (dimensions in mm)
Han E® , Crimp contact, Contact surface: Gold plated 	0,14 ... 0,37 0,5 0,75 1 1,5 2,5 4	09 33 000 6117 09 33 000 6122 09 33 000 6115 09 33 000 6118 09 33 000 6116 09 33 000 6123 09 33 000 6119	09 33 000 6217 09 33 000 6222 09 33 000 6215 09 33 000 6218 09 33 000 6216 09 33 000 6223 09 33 000 6221	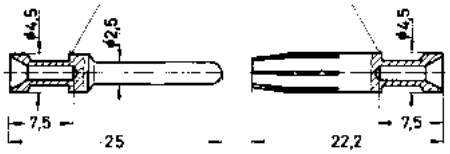

Conductor cross-section		Identification
0.14-0.37 mm²	AWG 26-22	no groove
0.5 mm²	AWG 20	no groove
0.75 mm²	AWG 18	1 groove*
1 mm²	AWG 18	1 groove
1.5 mm²	AWG 16	2 grooves
2.5 mm²	AWG 14	3 grooves
3 mm²	AWG 12	wide groove
4 mm²	AWG 12	no groove
* on the back crimp collar		

Stripping length 7.5 mm

Han E® , Crimp contact, Relay contact , Contact surface: Silver plated 	0,75 ... 1 1,5 2,5	09 33 000 6109 09 33 000 6110 09 33 000 6111		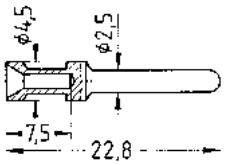
FO contact, for 1 mm plastic fibre 		20 10 001 3311	20 10 001 3321	 Crimp zone
Han E® Han® EE Han® EEE , Coding pin  for crimp inserts only			09 33 000 9954	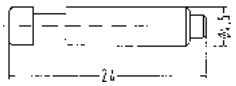

Features

- Suitable for Han D® crimp contacts
- PE contact with Han-Quick Lock® termination
- 16 coding options without loss of contacts

Technical characteristics

Number of contacts	12
Electrical data acc. to IEC 61984	10 A 400 V 6 kV 3
Rated current	10 A
Rated voltage	400 V
Rated impulse voltage	6 kV
Pollution degree	3
Insulation resistance	≥10^{10} Ω
Contact resistance	≤3 mΩ
Limiting temperature	-40 ... +125 °C
Mating cycles	≥500
Material (insert)	Polycarbonate
Colour (insert)	RAL 7032 (pebble grey)
Material (contacts)	Copper alloy
Material (accessories)	Thermoplastic
Material flammability class acc. to UL 94	V-0
RoHS	compliant with exemption, compliant
RoHS exemptions	**6c:** Copper alloy containing up to 4 % lead by weight

Derating

Current carrying capacity

The current carrying capacity of the connectors is limited by the thermal load capability of the contact element material including the connections and the insulating parts. The derating curve is therefore valid for currents which flow constantly (non-intermittent) through each contact element of the connector evenly, without exceeding the allowed maximum temperature.

Measuring and testing techniques acc. to IEC 60512-5-2

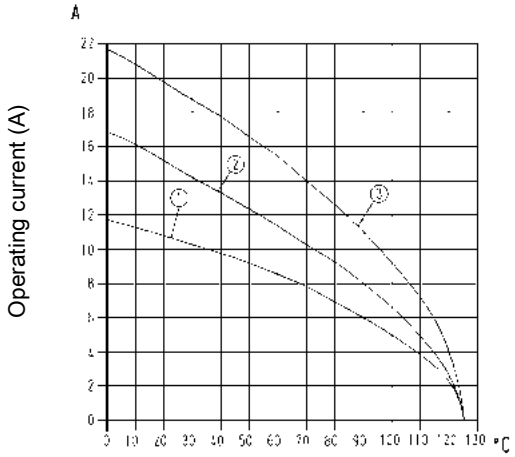

Ambient temperature (°C)

① Conductor cross-section 0.75 mm²
② Conductor cross-section 1.5 mm²
③ Conductor cross-section 2.5 mm²

Specifications and approvals

EN 60664-1
IEC 61984
UL 1977 ECBT2.E235076
CSA-C22.2 No. 182.3 ECBT8.E235076
DNV GL

Details

Crimping tools see chapter 90

Remarks on the crimp technique

The wire gauges mentioned in the catalogue refer to geometric wire gauges of cables.

Han® Q 12/0 Crimp/Quick Lock — Size 3 A

Number of contacts

12+ ⏚

10 A 400 V 6 kV 3

Identification	Conductor cross-section (mm²)	Part number Male	Part number Female	Drawing (dimensions in mm)
Han® Q , 12/0, With Han-Quick Lock® PE contact, Crimp termination  Blue slide Please order crimp contacts separately.	0,14 ... 2,5	09 12 012 3001	09 12 012 3101	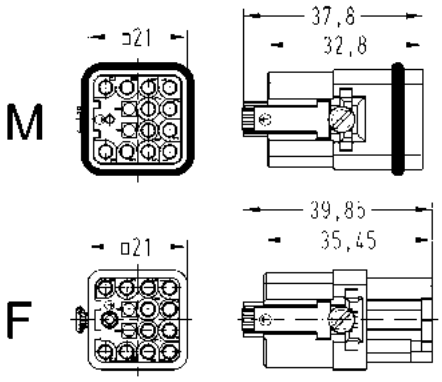 With Han-Quick Lock® PE contact : Conductor cross-section Blue slide 0.5 ... 2.5 Conductor cross-section Black slide 0.25 ... 1.5
Han® Q , 12/0, With Han-Quick Lock® PE contact, Crimp termination  Black slide Please order crimp contacts separately.	0,14 ... 2,5	09 12 012 3004	09 12 012 3104	
Han D® , Crimp contact, Contact surface: Silver plated 	0,14 ... 0,37 0,5 0,75 1 1,5 2,5	09 15 000 6104 09 15 000 6103 09 15 000 6105 09 15 000 6102 09 15 000 6101 09 15 000 6106	09 15 000 6204 09 15 000 6203 09 15 000 6205 09 15 000 6202 09 15 000 6201 09 15 000 6206	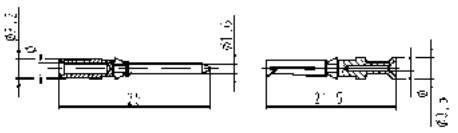 Wire gauge / ⌀ / Stripping length

Wire gauge		⌀	Stripping length
0.14-0.37 mm²	AWG 26-22	0.9 mm	8 mm
0.5 mm²	AWG 20	1.1 mm	8 mm
0.75 mm²	AWG 18	1.3 mm	8 mm
1 mm²	AWG 18	1.45 mm	8 mm
1.5 mm²	AWG 16	1.75 mm	8 mm
2.5 mm²	AWG 14	2.25 mm	6 mm

Han® Q 12/0 Crimp/Quick Lock

Size 3 A

Identification	Conductor cross-section (mm²)	Part number Male	Part number Female	Drawing (dimensions in mm)
Han D® , Crimp contact, Contact surface: Gold plated 	0,14 ... 0,37 0,5 0,75 1 1,5 2,5	09 15 000 6124 09 15 000 6123 09 15 000 6125 09 15 000 6122 09 15 000 6121 09 15 000 6126	09 15 000 6224 09 15 000 6223 09 15 000 6225 09 15 000 6222 09 15 000 6221 09 15 000 6226	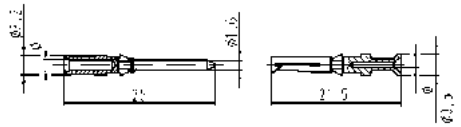 Wire gauge / ∅ / Stripping length 0.14-0.37 mm² AWG 26-22 — 0.9 mm — 8 mm 0.5 mm² AWG 20 — 1.1 mm — 8 mm 0.75 mm² AWG 18 — 1.3 mm — 8 mm 1 mm² AWG 18 — 1.45 mm — 8 mm 1.5 mm² AWG 16 — 1.75 mm — 8 mm 2.5 mm² AWG 14 — 2.25 mm — 6 mm
FO contact, for 1 mm plastic fibre 		20 10 001 3211	20 10 001 3221	 20 10 001 3211 + 20 10 001 3221
Coding element, Pack contents: 20 pieces per frame 		09 12 000 9924	09 12 000 9924	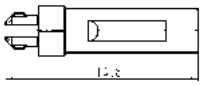

Features

- Compact design saves space
- Suitable for Han D® crimp contacts
- Leading PE crimp contact

Technical characteristics

Number of contacts	17
Electrical data acc. to IEC 61984	10 A 160 V 2,5 kV 3
Rated current	10 A
Rated voltage	160 V
Rated impulse voltage	2.5 kV
Pollution degree	3
Rated voltage acc. to UL	250 V
Rated voltage acc. to CSA	250 V
Insulation resistance	≥10^{10} Ω
Contact resistance	≤3 mΩ
Limiting temperature	-40 ... +125 °C
Mating cycles	≥500
Material (insert)	Polycarbonate
Colour (insert)	RAL 7032 (pebble grey)
Material (contacts)	Copper alloy
Material flammability class acc. to UL 94	V-0
RoHS	compliant, compliant with exemption
RoHS exemptions	**6c:** Copper alloy containing up to 4 % lead by weight

Derating

Current carrying capacity

The current carrying capacity of the connectors is limited by the thermal load capability of the contact element material including the connections and the insulating parts. The derating curve is therefore valid for currents which flow constantly (non-intermittent) through each contact element of the connector evenly, without exceeding the allowed maximum temperature.

Measuring and testing techniques acc. to IEC 60512-5-2

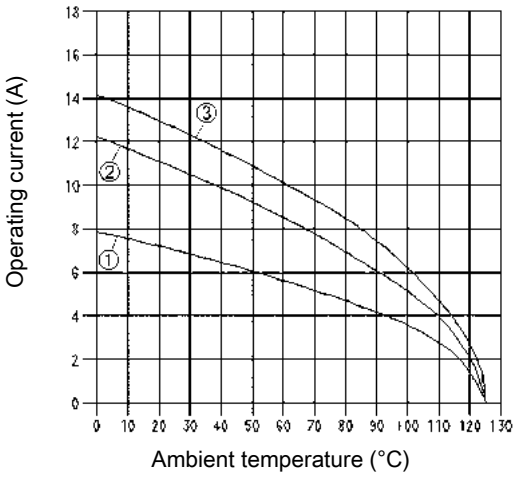

① Conductor cross-section 0.5 mm²
② Conductor cross-section 1 mm²
③ Conductor cross-section 1.5 mm²

Specifications and approvals

EN 60664-1
IEC 61984
UL 1977 ECBT2.E235076
CSA-C22.2 No. 182.3 ECBT8.E235076
DNV GL

Details

Crimping tools see chapter 90

Remarks on the crimp technique

The wire gauges mentioned in the catalogue refer to geometric wire gauges of cables.

Number of contacts

17+ ⏚

10 A 160 V 2,5 kV 3

Identification	Conductor cross-section (mm²)	Part number Male	Part number Female	Drawing (dimensions in mm)
Han® Q , 17/0, Crimp termination 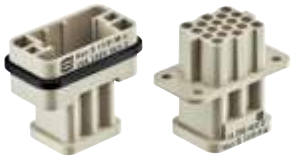 Please order crimp contacts separately.	0,14 ... 2,5	09 12 017 3001	09 12 017 3101	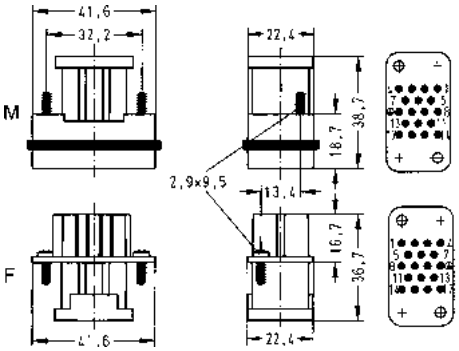 Contact arrangement (view from termination side)
Han D® , Crimp contact, Contact surface: Silver plated 	0,14 ... 0,37 0,5 0,75 1 1,5 2,5	09 15 000 6104 09 15 000 6103 09 15 000 6105 09 15 000 6102 09 15 000 6101 09 15 000 6106	09 15 000 6204 09 15 000 6203 09 15 000 6205 09 15 000 6202 09 15 000 6201 09 15 000 6206	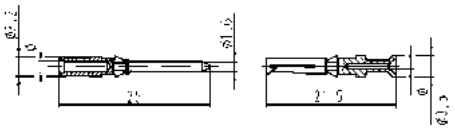
Han D® , Crimp contact, Contact surface: Gold plated 	0,14 ... 0,37 0,5 0,75 1 1,5 2,5	09 15 000 6124 09 15 000 6123 09 15 000 6125 09 15 000 6122 09 15 000 6121 09 15 000 6126	09 15 000 6224 09 15 000 6223 09 15 000 6225 09 15 000 6222 09 15 000 6221 09 15 000 6226	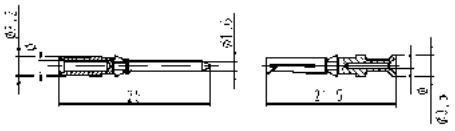
FO contact, for 1 mm plastic fibre 		20 10 001 3211	20 10 001 3221	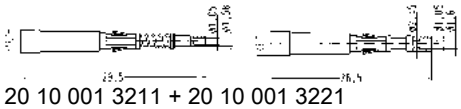 20 10 001 3211 + 20 10 001 3221

Wire gauge		⌀	Stripping length
0.14-0.37 mm²	AWG 26-22	0.9 mm	8 mm
0.5 mm²	AWG 20	1.1 mm	8 mm
0.75 mm²	AWG 18	1.3 mm	8 mm
1 mm²	AWG 18	1.45 mm	8 mm
1.5 mm²	AWG 16	1.75 mm	8 mm
2.5 mm²	AWG 14	2.25 mm	6 mm

Wire gauge		⌀	Stripping length
0.14-0.37 mm²	AWG 26-22	0.9 mm	8 mm
0.5 mm²	AWG 20	1.1 mm	8 mm
0.75 mm²	AWG 18	1.3 mm	8 mm
1 mm²	AWG 18	1.45 mm	8 mm
1.5 mm²	AWG 16	1.75 mm	8 mm
2.5 mm²	AWG 14	2.25 mm	6 mm

Features

- Easy handling of signal connectors in industrial environment
- High density of contacts
- Suitable for standard D-Sub crimp contacts
- One preleading contact

Technical characteristics

Number of contacts	21
Electrical data acc. to IEC 61984	6,5 A 50 V 0,8 kV 3
Rated current	6.5 A
Rated voltage	50 V
Rated impulse voltage	0.8 kV
Pollution degree	3
Rated voltage	50 V AC, 120 V DC
Insulation resistance	≥10^{10} Ω
Contact resistance	≤10 mΩ
Limiting temperature	-40 ... +125 °C
Mating cycles	≥500
Material (insert)	Polycarbonate
Colour (insert)	RAL 7032 (pebble grey)
Material (contacts)	Copper alloy
Material flammability class acc. to UL 94	V-0
RoHS	compliant, compliant with exemption
RoHS exemptions	**6c:** Copper alloy containing up to 4 % lead by weight

Derating

Current carrying capacity

The current carrying capacity of the connectors is limited by the thermal load capability of the contact element material including the connections and the insulating parts. The derating curve is therefore valid for currents which flow constantly (non-intermittent) through each contact element of the connector evenly, without exceeding the allowed maximum temperature.

Measuring and testing techniques acc. to IEC 60512-5-2

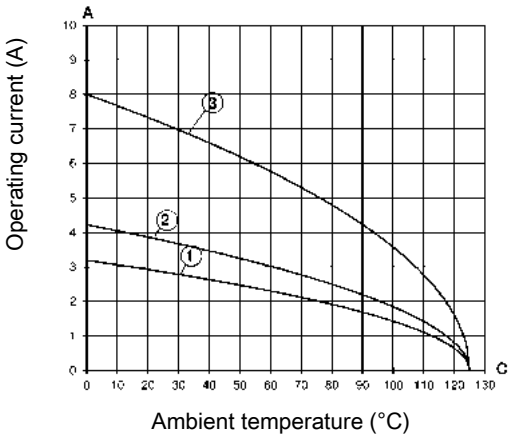

① Stamped contacts: Conductor cross-section 0.14 mm²
② Stamped contacts: Conductor cross-section 0.25 mm²
③ Turned contacts: Conductor cross-section 0.5 mm²

Specifications and approvals

EN 60664-1
IEC 61984
UL 1977 ECBT2.E235076
CSA-C22.2 No. 182.3 ECBT8.E235076
DNV GL

Details

Crimping tools see chapter 90

Remarks on the crimp technique

The wire gauges mentioned in the catalogue refer to geometric wire gauges of cables.

Number of contacts

21

6,5 A 50 V 0,8 kV 3

Identification	Conductor cross-section (mm²)	Part number Male	Part number Female	Drawing (dimensions in mm)
Han® Q , High Density, Crimp termination  Please order crimp contacts separately.	0,09 ... 0,56	09 12 021 3001	09 12 021 3101	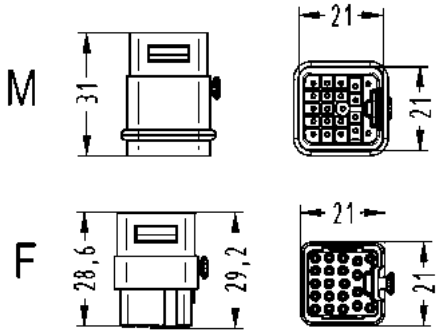
D-Sub , Standard, Crimp contact, Turned , Pack contents: Single contact 	0,09 ... 0,25 0,13 ... 0,33 0,25 ... 0,52	09 67 000 7576 09 67 000 5576 09 67 000 8576	09 67 000 7476 09 67 000 5476 09 67 000 8476	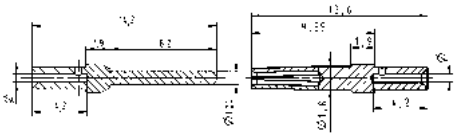 Wire gauge / ø / Stripping length 0.09-0.25 mm² / 0.64 mm / 4 mm 0.13-0.33 mm² / 0.88 mm / 4 mm 0.25-0.52 mm² / 1.13 mm / 4 mm 0.33-0.82 mm² / 1.34 mm / 4 mm for stranded wire according IEC 60228 Class 5
D-Sub , Standard, Crimp contact, Stamped , Pack contents: Single contact 	0,09 ... 0,25 0,25 ... 0,52	09 67 000 7176 09 67 000 8176	09 67 000 7276 09 67 000 8276	Wire gauge / max. insulation diameter / Stripping length 0.09-0.25 mm² / 1.02 / 2.5 mm + 0.5 0.25-0.52 mm² / 1.52 / 2.5 mm + 0.5

Han® Q Data RJ45

Features

- Combination connector: Ethernet connector based on RJ45 with up to 10 signal D-Sub contacts, crimp termination
- Turned D-Sub contacts of performance level 1
- Compact design saves space
- High density of contacts

Technical characteristics

Number of contacts	8
Electrical data acc. to IEC 61984	5 A 50 V 0,8 kV 3
Rated current	5 A
Rated voltage	50 V
Rated impulse voltage	0.8 kV
Pollution degree	3
Insulation resistance	≥10^{10} Ω
Contact resistance	≤10 mΩ
Limiting temperature	-40 ... +85 °C
Mating cycles	≥500
Material (insert)	Polycarbonate
Colour (insert)	RAL 7032 (pebble grey)
Material (contacts)	Copper alloy
Material flammability class acc. to UL 94	V-0
RoHS	compliant, compliant with exemption
RoHS exemptions	**6c:** Copper alloy containing up to 4 % lead by weight

Specifications and approvals

EN 60664-1
IEC 61984

Number of contacts

8

5 A 50 V 0,8 kV 3

Identification	Conductor cross-section (mm²)	Part number Male	Part number Female	Drawing (dimensions in mm)
Han® Q , Data RJ45, Crimp termination  Please order crimp contacts separately.	0,13 ... 0,52	09 12 011 3001	09 12 011 3111	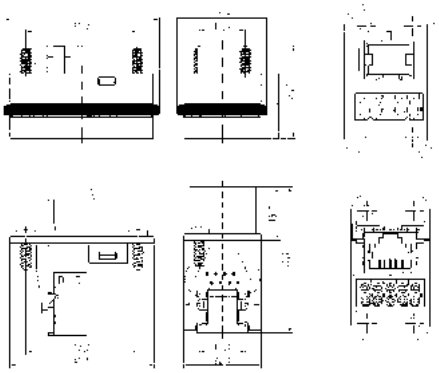
D-Sub , Standard, Crimp contact, Turned , Pack contents: Single contact 	0,13 ... 0,33 0,25 ... 0,52	09 67 000 5576 09 67 000 8576	09 67 000 5476 09 67 000 8476	Wire gauge / ø / Stripping length 0.09-0.25 mm² / 0.64 mm / 4 mm 0.13-0.33 mm² / 0.88 mm / 4 mm 0.25-0.52 mm² / 1.13 mm / 4 mm 0.33-0.82 mm² / 1.34 mm / 4 mm for stranded wire according IEC 60228 Class 5

Features

- Hoods/housings for industrial applications
- Compact design saves space

Technical characteristics

Limiting temperature	-40 ... +125 °C
Degree of protection acc. to IEC 60529	IP65
Type rating acc. to UL 50 / UL 50E	4, 12
Material (hood/housing)	Polycarbonate
Colour (hood/housing)	RAL 9005 (jet black)
Material (seal)	NBR
Material (locking)	Polyamide
Colour (locking)	RAL 9005 (jet black)
Material flammability class acc. to UL 94	V-0
Material flammability class acc. to UL 94 (locking levers)	V-0
RoHS	compliant

Specifications and approvals

UL 1977 ECBT2.E235076
CSA-C22.2 No. 182.3 ECBT8.E235076
DNV GL

Hoods/housings for industrial applications
Single locking lever

Identification	Cable entry	Part number	Drawing (dimensions in mm)
Han-Compact® , Hoods, for Han-Compact® half cable gland, Top entry 	1x M25 1x Pg 16 1x Pg 21	19 12 008 0429 09 12 008 0427 09 12 008 0429	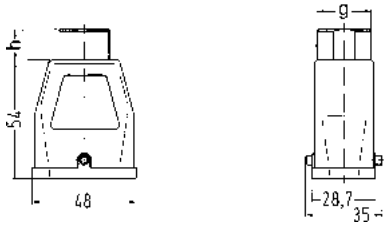
Han-Compact® , Hoods, for flexible conduits Adaptaflex PAFS18, Top entry 	1x PAFS 18	09 12 008 0428	
Han-Compact® , Hoods, for Han-Compact® half cable gland, Side entry 	1x Pg 16	09 12 008 0527	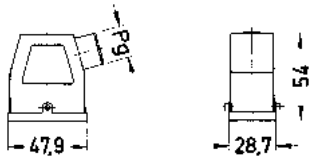
Han-Compact® , Hoods, for Han-Compact® half cable gland, Top/side entry 	2x M20	19 12 008 0425	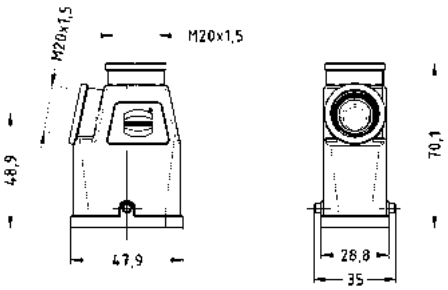

Identification	Cable entry	Part number	Drawing (dimensions in mm)
Han-Compact® , Bulkhead mounted housings, Straight 		09 12 008 0327	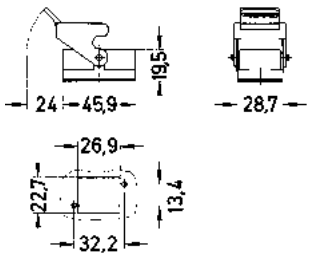
Han-Compact® , Bulkhead mounted housings, Angled 		09 12 008 0902	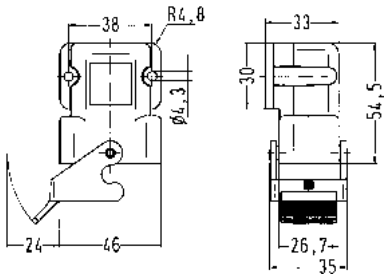
Han-Compact® , Surface mounted housing, for Han-Compact® half cable gland, Angled entry 	1x Pg 16	09 12 008 0901	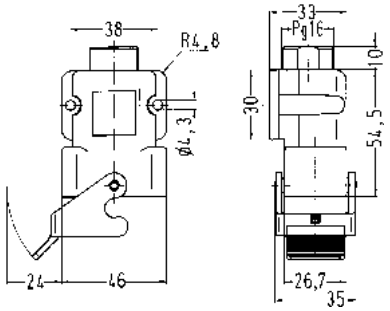
Han-Compact® , Cable to cable housing, for Han-Compact® half cable gland, Top entry 	1x M25 1x Pg 16	19 12 008 0729 09 12 008 0727	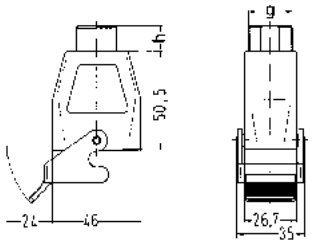
Han-Compact® , Cable to cable housing, for flexible conduits Adaptaflex PAFS18, Top entry 	1x PAFS 18	09 12 008 0728	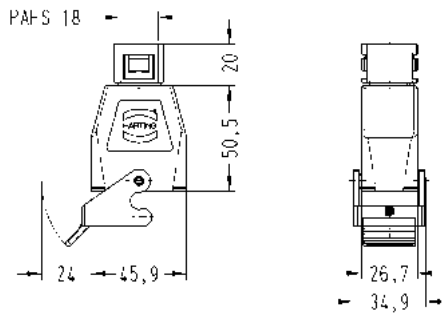

Identification	Cable entry	Part number	Drawing (dimensions in mm)
Han-Compact® , Protection cover, for bulkhead mounted housings, Thermoplastic  for mounted male insert		09 12 008 5407	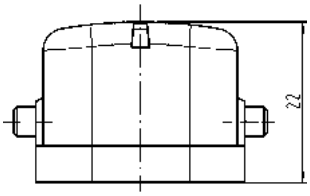
Han-Compact® , Protection cover, for bulkhead mounted housings, Thermoplastic  for mounted female insert		09 12 008 5408	

Features

- Hoods/housings for industrial applications
- Large space for cables
- Visible cabling
- Separate PE connection option

Technical characteristics

Limiting temperature	-40 ... +125 °C
Degree of protection acc. to IEC 60529	IP65
Type rating acc. to UL 50 / UL 50E	4, 12
Material (hood/housing)	Zinc die-cast
Surface (hood/housing)	Powder-coated, Chromated
Colour (hood/housing)	RAL 9005 (jet black)
Material (seal)	NBR
Material (locking)	Stainless steel
RoHS	compliant

Specifications and approvals

DNV GL
UL 1977 ECBT2.E235076
CSA-C22.2 No. 182.3 ECBT8.E235076

Hoods/housings for industrial applications
Single locking lever

Identification	Cable entry	Part number	Drawing (dimensions in mm)
Han-Compact® , Hoods, for standard cable gland, With separate PE terminating point, for all inserts of size Han-Compact®, Top entry 	1x M25	19 12 008 0426	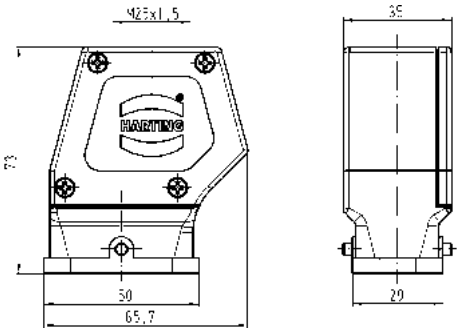
Han-Compact® , Hoods, for Han-Compact® half cable gland, With separate PE terminating point, for all inserts of size Han-Compact®, Top entry 	1x M25	19 12 708 0411	
Han-Compact® , Hoods, for standard cable gland, With separate PE terminating point, for all inserts of size Han-Compact®, Side entry 	1x M25	19 12 008 0526	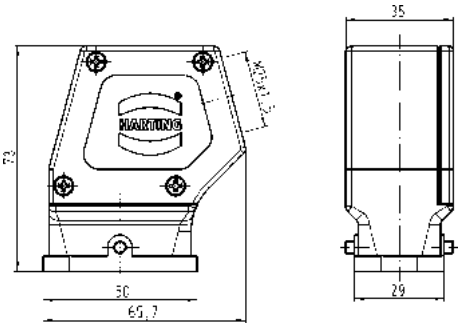
Han-Compact® , Hoods, for Han-Compact® half cable gland, With separate PE terminating point, for all inserts of size Han-Compact®, Side entry 	1x M25	19 12 708 0511	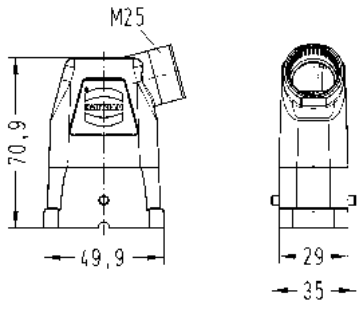

Han Q

Identification	Cable entry	Part number	Drawing (dimensions in mm)
Han-Compact® , Bulkhead mounted housings 		09 12 708 0301	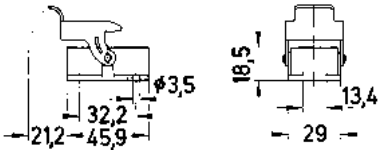

Hoods/housings for industrial applications
Single locking lever

Identification	Cable entry	Part number	Drawing (dimensions in mm)
Han-Compact® , Hoods, for Han-Compact® half cable gland, With separate PE terminating point, for all inserts of size Han-Compact®, Top entry 	1x M25	19 12 008 0411	
Han-Compact® , Hoods, for Han-Compact® half cable gland, With separate PE terminating point, for all inserts of size Han-Compact®, Side entry 	1x M25	19 12 008 0511	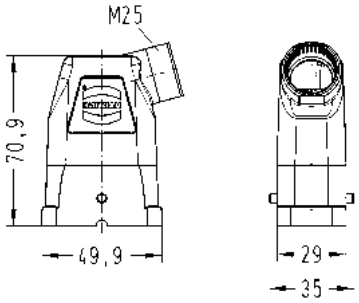
Han-Compact® , Bulkhead mounted housings 		09 12 008 0301	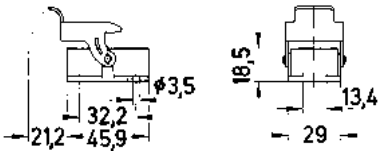

EMC hoods/housings

Han Q

Features

- Hoods/Housings for higher EMC requirements
- Separate PE connection option
- High degree of flexibility due to two-part assembly

Technical characteristics

Limiting temperature	-40 ... +125 °C
Degree of protection acc. to IEC 60529	IP65
Material (hood/housing)	Zinc die-cast
Surface (hood/housing)	Nickel plated
Material (seal)	NBR
Material (locking)	Stainless steel
RoHS	compliant

Specifications and approvals

DNV GL

Hoods/Housings for higher EMC requirements
Single locking lever

Identification	Cable entry	Part number	Drawing (dimensions in mm)
Han-Compact® , Hoods, for Han-Compact® half cable gland, With separate PE terminating point, for all inserts of size Han-Compact®, Top entry 	1x M25	19 12 008 0412	
Han-Compact® , Hoods, for standard cable gland, With separate PE terminating point, for all inserts of size Han-Compact®, Top entry 	1x M25	19 12 008 0428	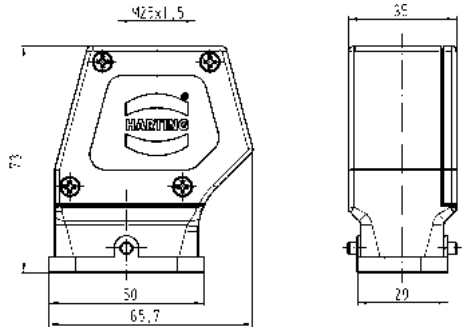
Han-Compact® , Hoods, for Han-Compact® half cable gland, With separate PE terminating point, for all inserts of size Han-Compact®, Side entry 	1x M25	19 12 008 0512	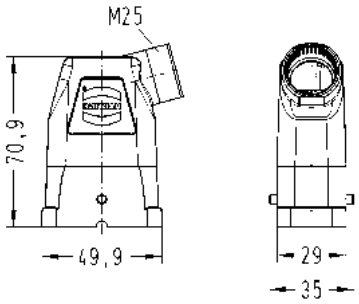
Han-Compact® , Hoods, for standard cable gland, With separate PE terminating point, for all inserts of size Han-Compact®, Side entry 	1x M25	19 12 008 0528	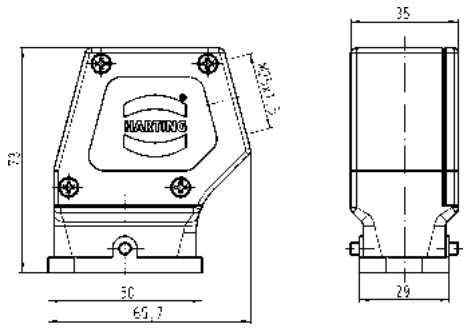

Han Q

Identification	Cable entry	Part number	Drawing (dimensions in mm)
Han-Compact® , Bulkhead mounted housings 		09 12 008 0303	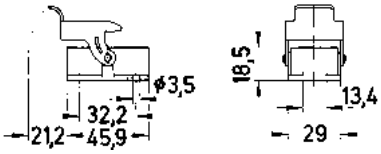

Technical characteristics

Limiting temperature	-40 ... +100 °C
Degree of protection acc. to IEC 60529	IP65
Material (cable glands)	Thermoplastic

Technical characteristics

Colour (accessories)	Black
RoHS	compliant, compliant with exemption
RoHS exemptions	**6c:** Copper alloy containing up to 4 % lead by weight

Identification	Size	Clamping range (mm)	Part number	Drawing (dimensions in mm)
Han-Compact® , Cable gland, for hoods, for cable to cable housing, Pg 16 	Pg 16 Pg 16 Pg 16	6,5 ... 9,5 9 ... 13 11,5 ... 15,5	09 00 000 5047 09 00 000 5156 09 00 000 5059	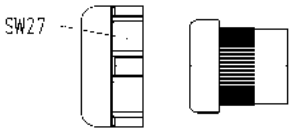
Han-Compact® , Cable gland, for surface mounted housings, Pg 16 	Pg 16 Pg 16	6,5 ... 9,5 11,5 ... 15,5	09 00 000 5057 09 00 000 5058	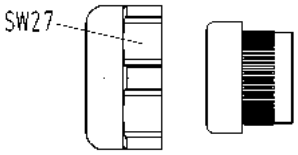
Han-Compact® , Cable gland, for hoods, for cable to cable housing, Pg 21 	Pg 21 Pg 21	14 ... 18 17 ... 20,5	09 00 000 5157 09 00 000 5158	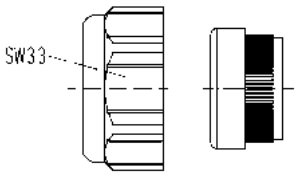
Han-Compact® , Cable gland, for hoods, for cable to cable housing, M25 	M25 M25 M25	6,5 ... 9,5 10,5 ... 14 14 ... 17	19 12 000 5156 19 12 000 5157 19 12 000 5158	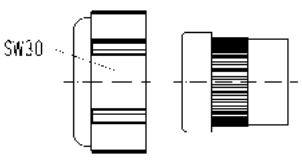

Technical characteristics

Limiting temperature	-40 ... +130 °C
Degree of protection acc. to IEC 60529	IP65

Technical characteristics

Material (cable glands)	Metal
RoHS	compliant with exemption
RoHS exemptions	**6c:** Copper alloy containing up to 4 % lead by weight

Identification	Size	Clamping range (mm)	Part number	Drawing (dimensions in mm)
Han-Compact® , Cable gland, for hoods 	M25 M25	10,5 ... 14 14 ... 17	19 12 000 5057 19 12 000 5058	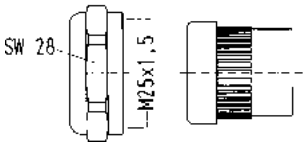
Han-Compact® , Cable gland, EMC version, for hoods 	M25 M25 M25	10,5 ... 14 10,5 ... 14 14 ... 17	19 62 000 5056 19 62 000 5057 19 62 000 5058	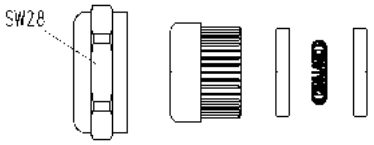

	ケーブル -Ø	シールド -Ø	SW
19 62 000 5056	10.5 ... 14mm	9 ... 13 mm	28
19 62 000 5057	10.5 ... 14mm	6 ... 11 mm	28
19 62 000 5058	14 ... 17 mm	9 ... 13 mm	28

Technical characteristics

Material (seal)	NBR
Colour (seal)	Black

Technical characteristics

Material (accessories)	Thermoplastic
Colour (accessories)	Black
RoHS	compliant

Identification	Size	Part number	Drawing (dimensions in mm)
Locking levers, Han® Q 8/0, Black 	Modular Compact	09 00 000 5244	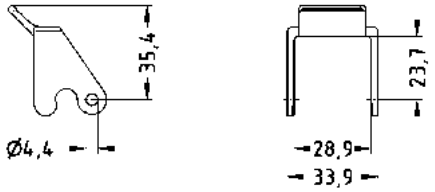
Flange gasket, for bulkhead mounted plastic housings, angled, for surface mounted housings 	Han-Compact®	09 12 000 9911	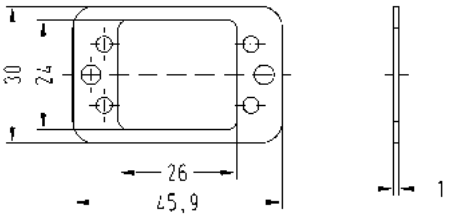
Flange gasket, for bulkhead mounted plastic housings, straight 	Han-Compact®	09 12 000 9912	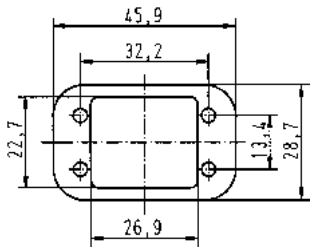



ASML's TWINSCAN NXE platform using Han® Q connectors is the industry's first production platform for extreme ultraviolet lithography (EUVL).

Han® HC-Modular

Contents | Page

Han® K 3/0	**14.4**
Han® K 3/2	**14.6**
Hoods/Housings for Han® K 3/0, Han® K 3/2	**14.8**
Han® HC Modular 250	**14.11**
Hoods/Housings for Han® HC Modular 250	**14.13**
Han® HC Modular 350	**14.23**
Hoods/Housings for Han® HC Modular 350	**14.29**
Han® M hoods/housings for Han® HC Modular 350	**14.46**
Han® HC Modular 650	**14.49**
Hoods/Housings for Han® HC Modular 650	**14.53**
Han® 24 HPR EasyCon	**14.60**
Han® 24 HPR EasyCon - Accessories	**14.69**
Han® 48 HPR	**14.70**

Assembly instructions

Remarks on the axial screw termination see chapter 00

Step 1: The outer diameter of the cable must not exceed 19.5 mm.
Strip the cable by 19 mm.

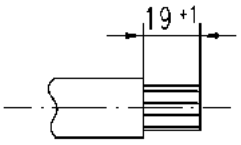

Insert the cable through hood.

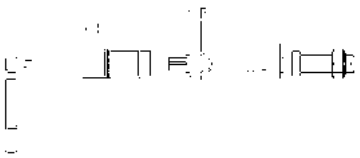

Step 2: Press the Han HC contact on the cable strand and apply tightening torque according table 1 by using a tightening torques tool. Take care that all cable strands fit completely inside the contact termination cavity. During assembling adhere the cable and the contact to minimise axial movement or twisting.

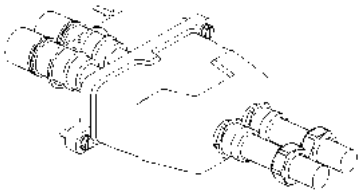

Step 3: Move the perforated plate across the HC contacts.

Step 4: Fit frame onto the hexagon shape of the HC contact. Coding can be arranged by turning the contact within 60° steps. Bolt the frame together with perforated plate.



Step 5: Push back the packet inside the good.

Step 6: Tighten the four M3 (tightening torque 0.5 Nm) screws and the cable gland according manufacturer recommendation.





During the assembly of the frame for 4 poles the following tightening torques have to be taken into consideration:
A = 0.5 Nm
B = 1.5 Nm
C = 0.25 Nm

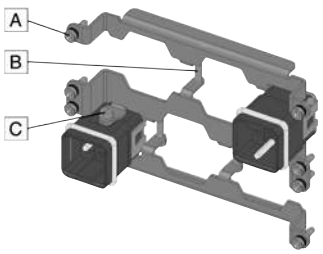

Assembly instructions

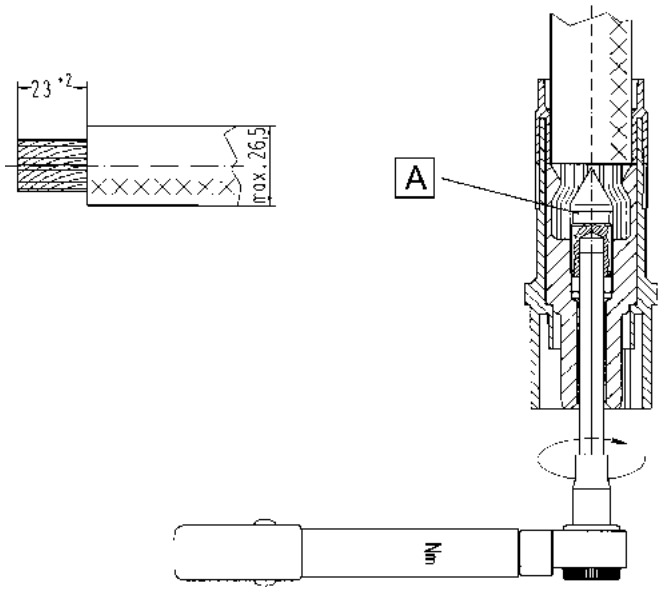

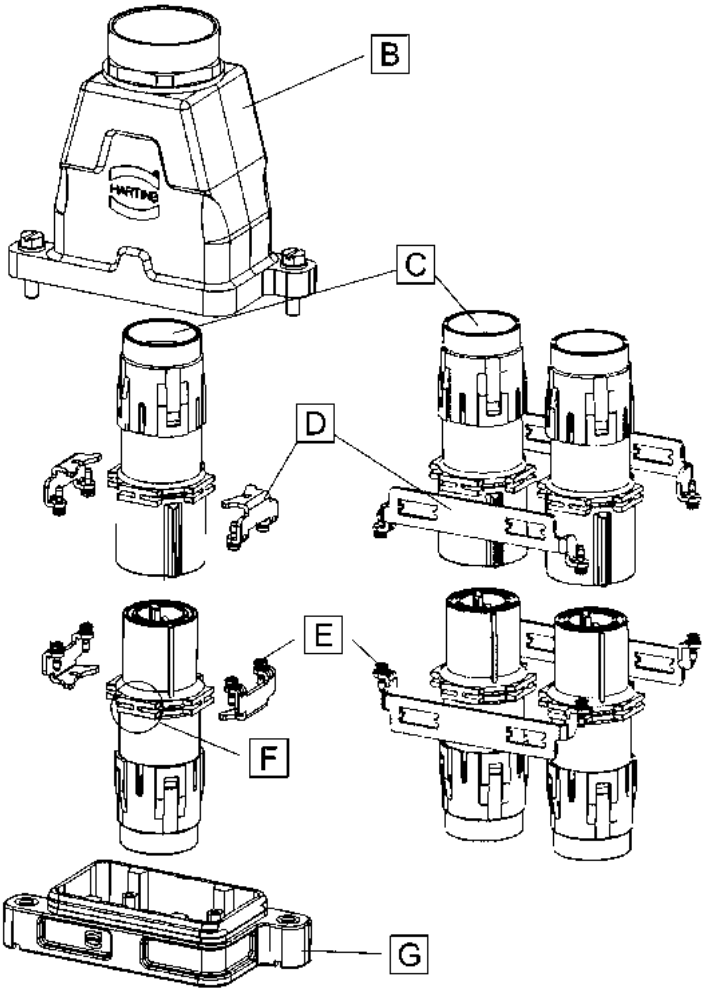

1. Strip cable to 23+2 mm.

2. Push conductor through the cable gland and the housing. Push the stripped end of the conductor into the termination entry of the module until the insulation touches the contact.

3. To tighten the axial screw, a hexagonal wrench size 8 is needed. Insert the hexagonal wrench on the mating side of the contact. At the same time, push the conductor over the axial screw.The locking screw has to be tightened with the recommended tightening torque that is determined by the conductor's cross section.

4. Once the modules are terminated, they are mounted into the housing by using two metal frames (tightening torque of the fixing screws = 0.5 Nm). The modules have 4 pegs formed by 2 parallel ribs (each peg shapes like a "H"). Each rib takes 1 pole frame, where the lateral link has to go into the relief of the frame. The 2 pole frames have 2 cutouts on the wall which get fitted to the "H"-shaped pegs (see figure). The heads of the screws have to face the mating direction of the module. Coding can be established by rotating the contact by 90 degrees. Therefore it is important that the corresponding modules are assembled in the correct position otherwise mating is not possible.

5. After assembling the modules in the housing, the tightening torque of the locking screw can be checked and corrected if necessary.

6. After final assembly of the contacts, the user should ensure that the cable is adequately strain reliefed to protect the contact from radial stress.

A - Axial screw, B - Hood, C - Termination entry, D - Frame, E - Fixing screws, F - parallel ribs with H-shape, G - Housings bulkhead mounting,

Features

- The ideal connector for transmission of high currents requiring little space
- The vertical and angled versions offer solutions for almost all applications
- The angled versions offer a space-saving 90° cable wiring

Technical characteristics

Number of contacts	3
Electrical data acc. to IEC 61984	200 A 1.150/2.000 V 8 kV 3
Rated current	200 A
Rated voltage conductor-earth	1150 V
Rated voltage conductor-conductor	2000 V
Rated impulse voltage	8 kV
Pollution degree	3
Rated current acc. to UL	200 A
Rated current acc. to CSA	160 A
Rated voltage acc. to UL	600 V
Rated voltage acc. to CSA	600 V
Insulation resistance	≥10^{10} Ω
Contact resistance	≤0.2 mΩ
Limiting temperature	-40 ... +125 °C
Mating cycles	≥500
Material (insert)	Polycarbonate
Colour (insert)	RAL 7032 (pebble grey)
Material (contacts)	Copper alloy
Material flammability class acc. to UL 94	V-0
RoHS	compliant with exemption
RoHS exemptions	**6a:** Lead as an alloying element in steel for machining purposes and in galvanised steel containing up to 0,35 % lead by weight

Derating

Current carrying capacity

The current carrying capacity of the connectors is limited by the thermal load capability of the contact element material including the connections and the insulating parts. The derating curve is therefore valid for currents which flow constantly (non-intermittent) through each contact element of the connector evenly, without exceeding the allowed maximum temperature.

Measuring and testing techniques acc. to IEC 60512-5-2

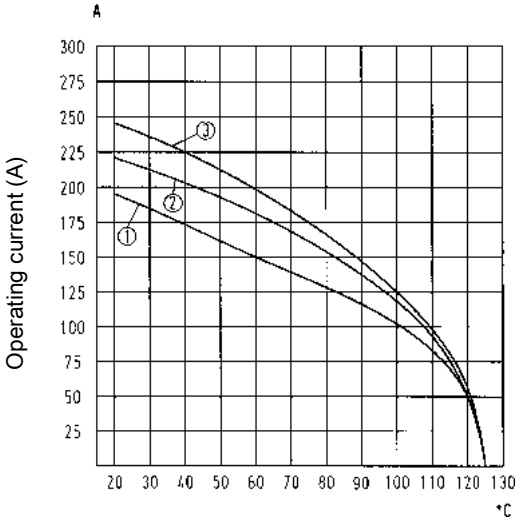

① Conductor cross-section 35 mm²
② Conductor cross-section 50 mm²
③ Conductor cross-section 70 mm²

Specifications and approvals

EN 60664-1
IEC 61984
UL 1977 ECBT2.E235076
CSA-C22.2 No. 182.3 ECBT8.E235076
DNV GL

Details

ATTENTION! Only to be used with special Han® 24 HPR hoods and housings!

Remarks on the axial screw technique

The wire gauges mentioned in the catalogue refer to geometric wire gauges of cables.

Hex key (A/F 5) see chapter 90

Number of contacts

3

200 A 1.150/2.000 V 8 kV 3



Identification	Conductor cross-section (mm²)	Part number Male	Part number Female	Drawing (dimensions in mm)
Han-Com® , Han® K 3/0, Straight, Axial screw termination, Contact surface: Silver plated 	35 ... 70	09 38 005 2621	09 38 005 2721	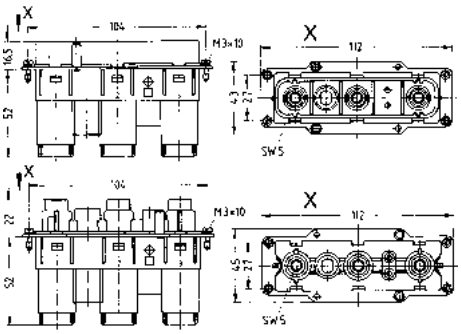 Distance for contact max. 21 mm Stripping length 22 mm Tightening torque 8 Nm @ 35 mm², 9 Nm @ 50 mm², 10 Nm @ 70 mm²
Han-Com® , Han® K 3/0, Angled, Axial screw termination, Contact surface: Silver plated 	35 ... 70	09 38 005 2622	09 38 005 2722	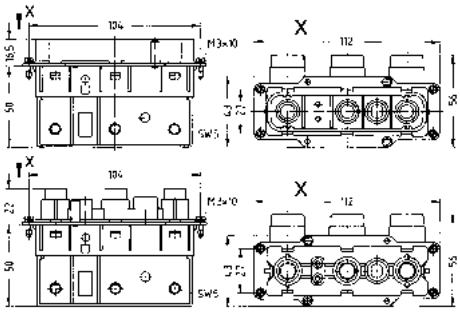 Distance for contact max. 21 mm Stripping length 22 mm Tightening torque 8 Nm @ 35 mm², 9 Nm @ 50 mm², 10 Nm @ 70 mm²

Features

- The ideal connector for transmission of high currents requiring little space
- The vertical and angled versions offer solutions for almost all applications
- The angled versions offer a space-saving 90° cable wiring

Technical characteristics

Number of contacts	3
Additional contacts	+ 2 additional signal contacts
Electrical data acc. to IEC 61984	200 A 1.150/2.000 V 8 kV 3
Rated current	200 A
Rated voltage conductor-earth	1150 V
Rated voltage conductor-conductor	2000 V
Rated impulse voltage	8 kV
Pollution degree	3
Electrical data, signal	16 A 400 V 6 kV 3
Rated current (signal)	16 A
Rated voltage (signal)	400 V
Rated impulse voltage (signal)	6 kV
Pollution degree (signal)	3
Rated current acc. to UL	200 A
Rated current acc. to UL (signal)	16 A
Rated current acc. to CSA	160 A
Rated current acc. to CSA (signal)	16 A
Rated voltage acc. to UL	600 V
Rated voltage acc. to UL (signal)	600 V
Rated voltage acc. to CSA	600 V
Rated voltage acc. to CSA (signal)	600 V
Insulation resistance	≥10^{10} Ω
Contact resistance	≤0.2 mΩ
Contact resistance, signal area	≤1 mΩ
Limiting temperature	-40 ... +125 °C
Mating cycles	≥500
Material (insert)	Polycarbonate
Colour (insert)	RAL 7032 (pebble grey)
Material (contacts)	Copper alloy
Material flammability class acc. to UL 94	V-0
RoHS	compliant with exemption
RoHS exemptions	**6a:** Lead as an alloying element in steel for machining purposes and in galvanised steel containing up to 0,35 % lead by weight, **6c:** Copper alloy containing up to 4 % lead by weight

Derating

Current carrying capacity

The current carrying capacity of the connectors is limited by the thermal load capability of the contact element material including the connections and the insulating parts. The derating curve is therefore valid for currents which flow constantly (non-intermittent) through each contact element of the connector evenly, without exceeding the allowed maximum temperature.

Measuring and testing techniques acc. to IEC 60512-5-2

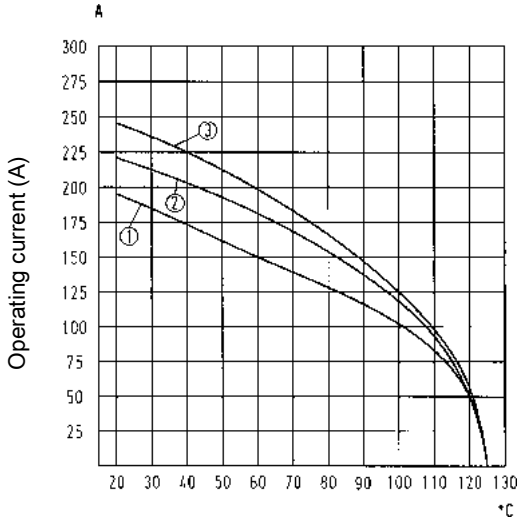

① Conductor cross-section 35 mm²
② Conductor cross-section 50 mm²
③ Conductor cross-section 70 mm²

Specifications and approvals

EN 60664-1
IEC 61984
UL 1977 ECBT2.E235076
CSA-C22.2 No. 182.3 ECBT8.E235076
DNV GL

Details

ATTENTION! Only to be used with special Han® 24 HPR hoods and housings!

Remarks on the axial screw technique

The wire gauges mentioned in the catalogue refer to geometric wire gauges of cables.

Hex key (A/F 5) see chapter 90

Hex key (A/F 4) for PE contact see chapter 90

Number of contacts

3+ ⏚

200 A 1.150/2.000 V 8 kV 3
+ 2 additional signal contacts
16 A 400 V 6 kV 3

Identification	Conductor cross-section (mm²)	Part number Male	Part number Female	Drawing (dimensions in mm)
Han-Com® , Han® K 3/2, Straight, Axial screw termination / screw termination, Contact surface: Silver plated 	35 ... 70, 0,5 ... 2,5 Signal, 16 ... 35 PE	09 38 005 2601	09 38 005 2701	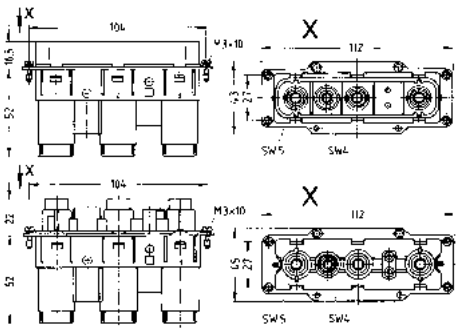 Distance for contact max. 21 mm Stripping length 22 mm Tightening torque 8 Nm @ 35 mm², 9 Nm @ 50 mm², 10 Nm @ 70 mm² Signal contacts: Stripping length 7 mm, Tightening torque 0.5 Nm PE contact: Stripping length 14 mm, Tightening torque 6 Nm
Han-Com® , Han® K 3/2, Angled, Axial screw termination / screw termination, Contact surface: Silver plated 	35 ... 70, 0,5 ... 2,5 Signal, 16 ... 35 PE	09 38 005 2602	09 38 005 2702	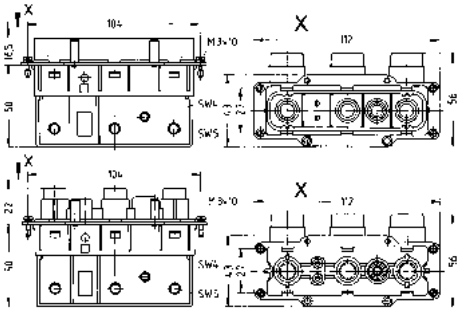 Distance for contact max. 21 mm Stripping length 22 mm Tightening torque 8 Nm @ 35 mm², 9 Nm @ 50 mm², 10 Nm @ 70 mm² Signal contacts: Stripping length 7 mm, Tightening torque 0.5 Nm PE contact: Stripping length 14 mm, Tightening torque 6 Nm

Hoods/Housings for Han® K 3/0, Han® K 3/2

Features

- Hoods/housings for harsh outdoor environments
- Metal hoods and housings with excellent corrosion resistance
- Corrosion resistance ASTM B117-09 (500 h)
- Excellent EMC characteristics
- Screw locking M6
- Field of application: for external electrical interconnections in vehicles, in highly demanding environments and wet areas, as well as for sensitive interconnections that have to be shielded
- Distinguishing feature: colour-coded black, internal seal

Technical characteristics

Limiting temperature	-40 ... +125 °C
Tightening torque (screw locking)	4 Nm
Degree of protection acc. to IEC 60529	IP65, IP68, IP69 / IPX9K acc. to ISO 20653
Type rating acc. to UL 50 / UL 50E	4, 4X, 12
Material (hood/housing)	Aluminium die-cast, Corrosion resistant
Surface (hood/housing)	Powder-coated
Colour (hood/housing)	RAL 9005 (jet black)
Material (seal)	NBR
Material (locking)	Stainless steel
RoHS	compliant, compliant with exemption
RoHS exemptions	**6c:** Copper alloy containing up to 4 % lead by weight

Specifications and approvals

UL 1977 ECBT2.E235076
CSA-C22.2 No. 182.3 ECBT8.E235076
DNV GL

Hoods/Housings for Han® K 3/0, Han® K 3/2 Size 24 B

Hoods/housings for harsh outdoor environments
Screw locking

Identification	Cable entry	Part number	Drawing (dimensions in mm)
Han® HPR , Hoods, Special type, Top entry 	1x M63	19 40 024 0420	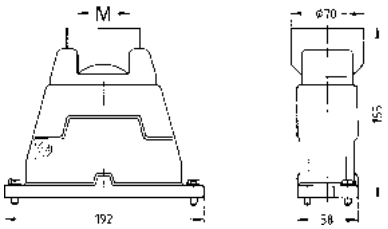
Han® HPR , Hoods, Top entry 	3x M25 3x M25, 1x M20	19 40 024 0461 19 40 024 0471	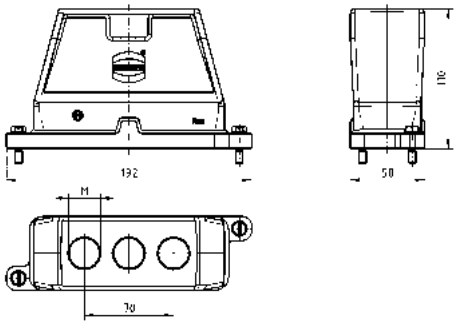
Han® HPR , Hoods, Special type, Angled entry 	3x M25	19 40 024 0631	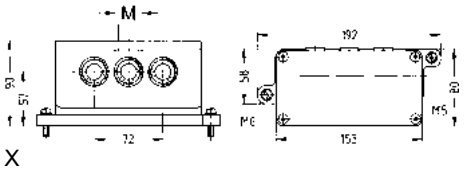
Han® HPR , Bulkhead mounted housings 		09 40 024 0311	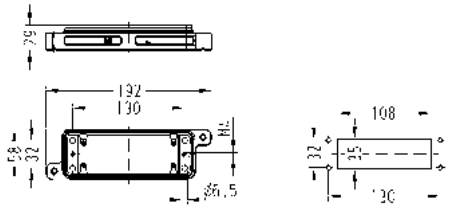

Hoods/Housings for Han® K 3/0, Han® K 3/2 Size 24 B

Identification	Cable entry	Part number	Drawing (dimensions in mm)
Han® HPR , Surface mounted housing, Horizontal version, Top entry 	1x M50 3x M25 3x M25, 1x M20	19 40 024 0914 19 40 024 0931 19 40 024 0971	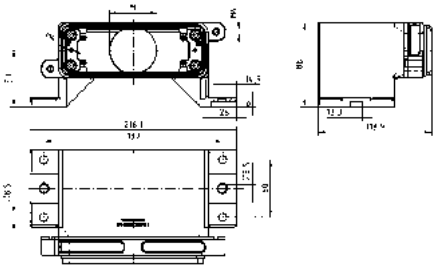
Han® HPR , Surface mounted housing, Top entry 	3x M25 3x M25, 1x M20	19 40 024 1231 19 40 024 1271	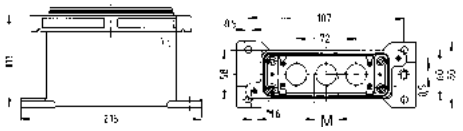

Features

- Contacts for fine stranded wire
- Low mating forces
- Suitable for HPR® hoods and housings

Technical characteristics

Electrical data acc. to IEC 61984	250 A 2.000 V 12 kV 3
Rated current	250 A
Rated voltage	2000 V
Rated impulse voltage	12 kV
Pollution degree	3
Insulation resistance	≥10^{10} Ω
Contact resistance	≤0.3 mΩ
Limiting temperature	-40 ... +125 °C
Mating cycles	≥500
Wire outer diameter	≤18 mm
Material (insert)	Polycarbonate
Colour (insert)	RAL 7032 (pebble grey)
Material (contacts)	Copper alloy
Material flammability class acc. to UL 94	V-0
RoHS	compliant, compliant with exemption
RoHS exemptions	**6c:** Copper alloy containing up to 4 % lead by weight

Derating

Current carrying capacity

The current carrying capacity of the connectors is limited by the thermal load capability of the contact element material including the connections and the insulating parts. The derating curve is therefore valid for currents which flow constantly (non-intermittent) through each contact element of the connector evenly, without exceeding the allowed maximum temperature.

Measuring and testing techniques acc. to IEC 60512-5-2

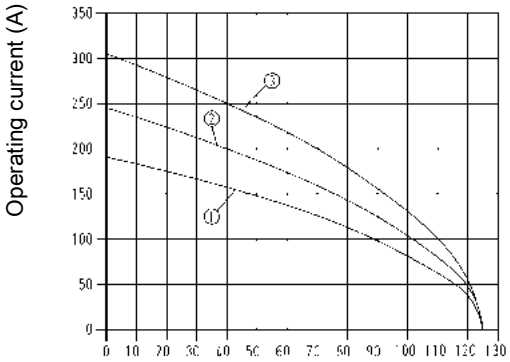

① Conductor cross-section 35 mm²
② Conductor cross-section 50 mm²
③ Conductor cross-section 70 mm²
4 contacts in Han® 24 HPR

Specifications and approvals

EN 60664-1
IEC 61984
EN 50124-1
DNV GL

Details

Removal tool 09 99 000 0332 see chapter 90

For more technical details (i.e. number of crimping operations or crimping position) see eCatalogue

Crimping tools see chapter 90

Remarks on the crimp technique

The wire gauges mentioned in the catalogue refer to geometric wire gauges of cables.

250 A 2.000 V 12 kV 3

Identification	Conductor cross-section (mm²)	Part number Male	Part number Female	Drawing (dimensions in mm)
Han® HC Modular , 250, Crimp termination  Please order crimp contacts separately.	10 ... 70	09 11 001 3021	09 11 001 3121	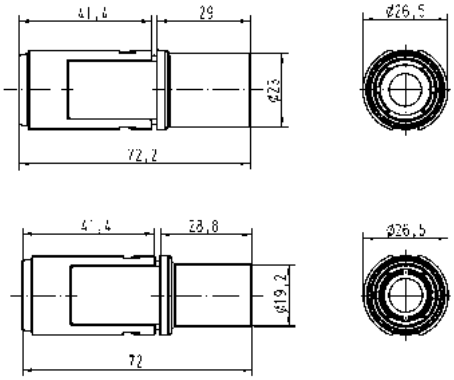
TC 250 , Crimp contact, Contact surface: Silver plated 	10 16 25 35 50 70	09 11 000 6184 09 11 000 6185 09 11 000 6126 09 11 000 6127 09 11 000 6128 09 11 000 6129	09 11 000 6284 09 11 000 6285 09 11 000 6226 09 11 000 6227 09 11 000 6228 09 11 000 6229	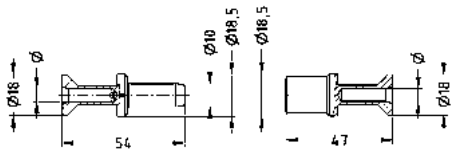
TC 250 , Crimp contact, PE contact , Contact surface: Silver plated 	16 35	09 11 000 6190 09 11 000 6104	09 11 000 6290 09 11 000 6204	

Conductor cross-section	Tool identification	Stripping length A	Ø
10 mm²	6	22 mm	4.3 mm
16 mm²	8	22 mm	8.5 mm
25 mm²	10	19 mm	7 mm
35 mm²	12	22 mm	8.45 mm
50 mm²	14	22 mm	10.25 mm
70 mm²	16	22 mm	11.75 mm
for stranded wire according to IEC 60 228 Class 5			

Crimp zone acc. to DIN 46235

Features

- Hoods/housings for harsh outdoor environments
- Metal hoods and housings with excellent corrosion resistance
- Corrosion resistance ASTM B117-09 (500 h)
- Excellent EMC characteristics
- Screw locking M6
- Field of application: for external electrical interconnections in vehicles, in highly demanding environments and wet areas, as well as for sensitive interconnections that have to be shielded

Technical characteristics

Limiting temperature	-40 ... +125 °C
Tightening torque (screw locking)	4 Nm
Degree of protection acc. to IEC 60529	IP65, IP68, IP69 / IPX9K acc. to ISO 20653
Type rating acc. to UL 50 / UL 50E	4, 4X, 12
Material (hood/housing)	Aluminium die-cast, Corrosion resistant
Surface (hood/housing)	Powder-coated
Colour (hood/housing)	RAL 9005 (jet black)
Material (seal)	NBR
Material (locking)	Stainless steel
Material (accessories)	Metal, Stainless steel
RoHS	compliant

Specifications and approvals

UL 1977 ECBT2.E235076
CSA-C22.2 No. 182.3 ECBT8.E235076
DNV GL

Hoods/housings for harsh outdoor environments
Screw locking

Identification	Cable entry	Part number	Drawing (dimensions in mm)
Han® HPR , Hoods, Top entry 	4x M20 4x M25	19 40 024 0473 19 40 024 0474	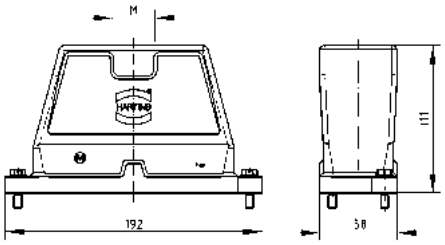
Han® HPR , Frame, for male inserts, 4x Han® HC Modular 250 		09 11 000 9925	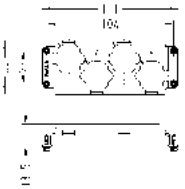 Tightening torque Fixing screws M3: 0.5 Nm
Han® HPR , Frame, for female inserts, 4x Han® HC Modular 250 		09 11 000 9942	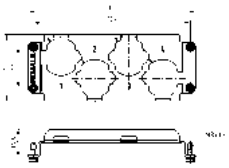 Tightening torque Fixing screws M3: 0.5 Nm

Hoods/housings for harsh outdoor environments
Screw locking

Identification	Cable entry	Part number	Drawing (dimensions in mm)
Han® HPR , Bulkhead mounted housings 		09 40 024 0311	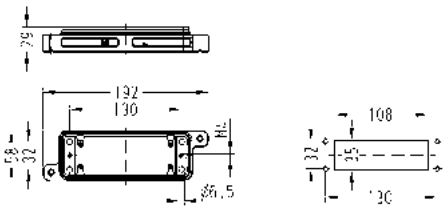
Han® HPR , Surface mounted housing, Horizontal version, Top entry 	4x M25	19 40 024 0941	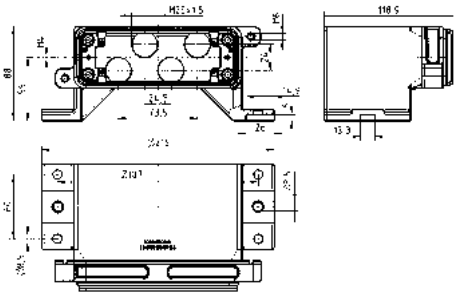
Han® HPR , Surface mounted housing, Top entry	4x M25	19 40 024 1242	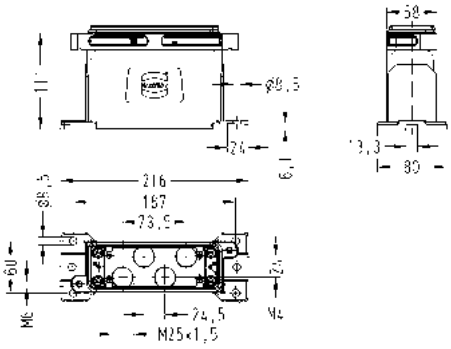

Hoods/Housings for Han® HC Modular 250 Size 24 B

Identification	Cable entry	Part number	Drawing (dimensions in mm)
Mounting frames, Han® HPR, Thread M6 		09 40 000 9955	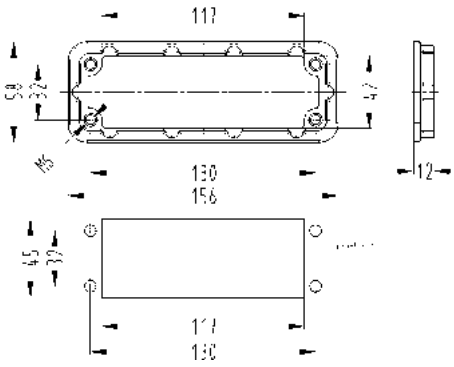
Han® HPR , Frame, for female inserts, 4x Han® HC Modular 250 		09 11 000 9926	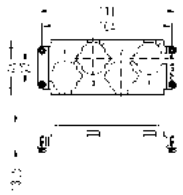 Tightening torque Fixing screws M3: 0.5 Nm
Han® HPR , Frame, for male inserts, 4x Han® HC Modular 250 		09 11 000 9941	 Tightening torque Fixing screws M3: 0.5 Nm

Hoods/Housings for Han® HC Modular 250 enlarged Size 16 B

Hoods/housings for harsh outdoor environments
Screw locking

Identification	Cable entry	Part number	Drawing (dimensions in mm)
Han® HPR , Hoods, Enlarged, Top entry 	4x M25	19 40 016 0478	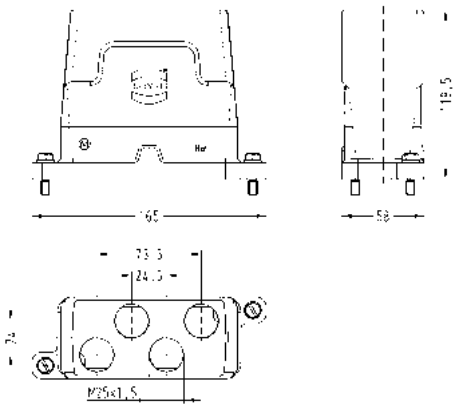
Han® HPR enlarged , Frame, for male inserts, 4x Han® HC Modular 250, Pack contents: 4x cheese-head screw M6 x 20, 4x washer SK S6 		09 11 000 9937	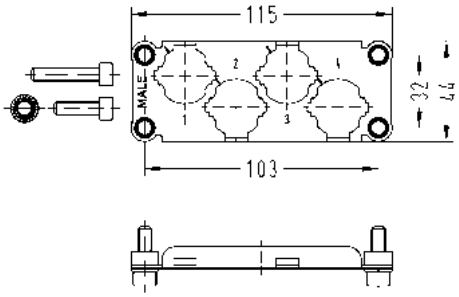 Tightening torque Fixing screws M6: 10 Nm

Hoods/housings for harsh outdoor environments
Screw locking

Identification	Cable entry	Part number	Drawing (dimensions in mm)
Han® HPR , Bulkhead mounted housings, Enlarged 		09 40 016 0368	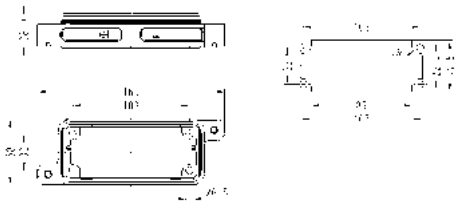
Han® HPR , Surface mounted housing, Horizontal version, Enlarged, Top entry 	4x M25	19 40 016 0978	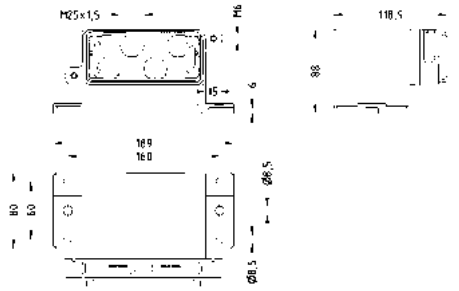
Mounting frames, Han® HPR, Thread M6 		09 40 000 9956	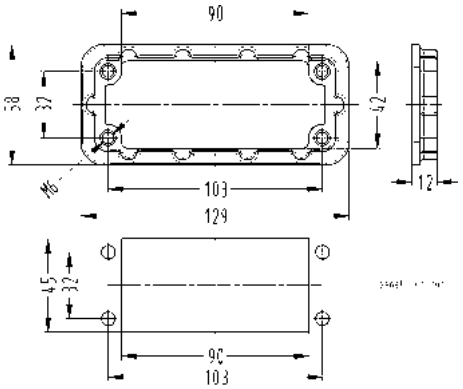
Han® HPR enlarged , Frame, for female inserts, 4x Han® HC Modular 250, Pack contents: 4x cheese-head screw M6 x 30, 4x washer SK S6 		09 11 000 9938	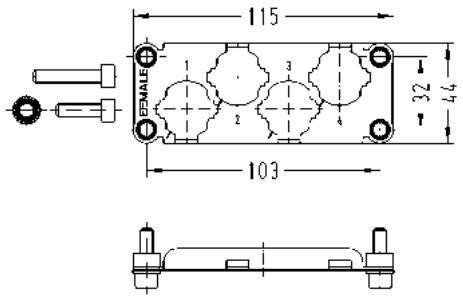 Tightening torque Fixing screws M6: 10 Nm

Hoods/Housings for Han® HC Modular 250 enlarged Size 24 B

Hoods/housings for harsh outdoor environments
Screw locking

Identification	Cable entry	Part number	Drawing (dimensions in mm)
Han® HPR , Hoods, Enlarged, Top entry 	3x M32	19 40 024 0468	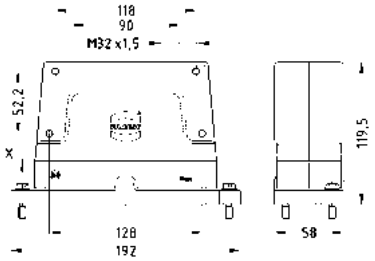
Han® HPR , Bulkhead mounted housings, Enlarged 		09 40 024 0368	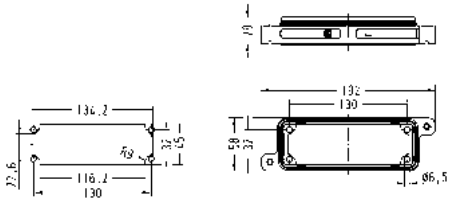
Han® HPR , Surface mounted housing, Horizontal version, Enlarged, Top entry  Bulkhead mounted housing 09 40 024 0368 not included, please order separately	3x M32	19 40 024 0968	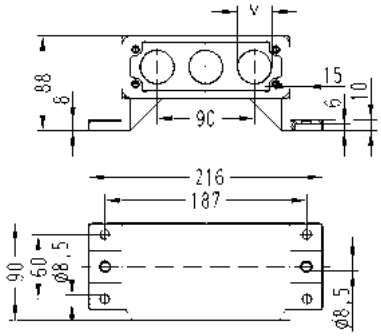
Mounting frames, Han® HPR, Thread M6 		09 40 000 9904	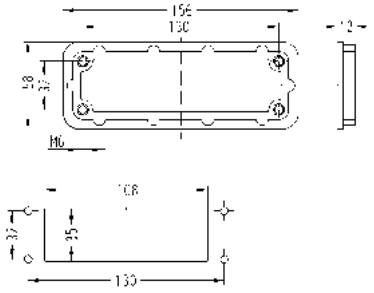 Panel cut out

Identification	Cable entry	Part number	Drawing (dimensions in mm)
Han® HPR enlarged , Frame, for male inserts, 3x Han® HC Modular 250, Pack contents: 4x cheese-head screw M6 x 20, 4x cheese-head screw M6 x 25, 4x washer SK S6 		09 11 000 9931	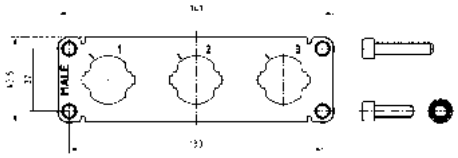 Tightening torque Fixing screw M6: 10 Nm
Han® HPR enlarged , Frame, for female inserts, 3x Han® HC Modular 250, Pack contents: 4x cheese-head screw M6 x 20, 4x cheese-head screw M6 x 25, 4x washer SK S6 		09 11 000 9932	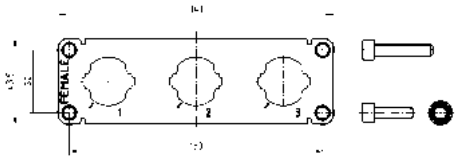 Tightening torque Fixing screw M6: 10 Nm

Hoods/Housings for Han® HC Modular 250 enlarged Size 24 B

Hoods/housings for harsh outdoor environments
Screw locking

Identification	Cable entry	Part number	Drawing (dimensions in mm)
Han® HPR , Hoods, Enlarged, Top entry 	4x M25	19 40 024 0478	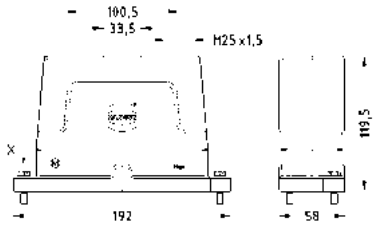
Han® HPR , Bulkhead mounted housings, Enlarged 		09 40 024 0368	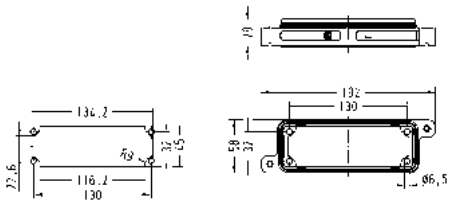
Han® HPR , Surface mounted housing, Horizontal version, Enlarged, Top entry  Bulkhead mounted housing 09 40 024 0368 not included, please order separately	4x M25	19 40 024 0978	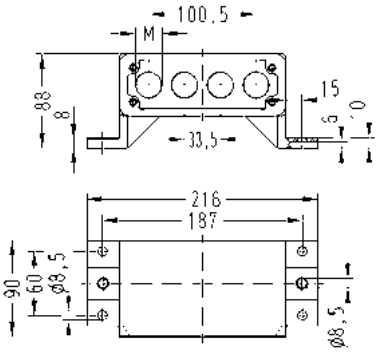
Mounting frames, Han® HPR, Thread M6 		09 40 000 9904	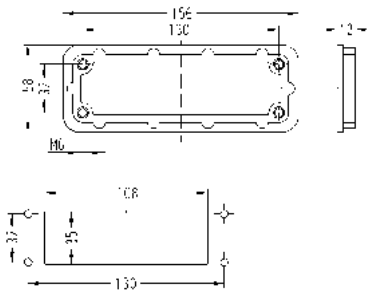 Panel cut out

Hoods/Housings for Han® HC Modular 250 enlarged Size 24 B

Identification	Cable entry	Part number	Drawing (dimensions in mm)
Han® HPR enlarged , Frame, for male inserts, 4x Han® HC Modular 250, Pack contents: 4x cheese-head screw M6 x 20, 4x cheese-head screw M6 x 25, 4x washer SK S6 		09 11 000 9927	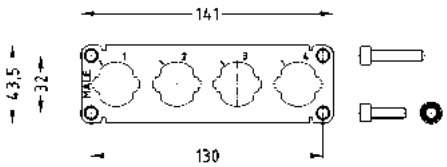 Tightening torque Fixing screws M6: 10 Nm
Han® HPR enlarged , Frame, for female inserts, 4x Han® HC Modular 250, Pack contents: 4x cheese-head screw M6 x 20, 4x cheese-head screw M6 x 25, 4x washer SK S6 		09 11 000 9928	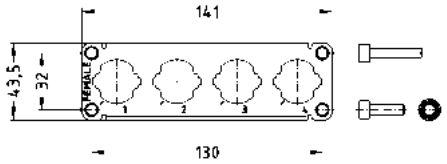 Tightening torque Fixing screws M6: 10 Nm
Han® HPR enlarged , Frame, for male inserts, 3x Han® HC Modular 250, Pack contents: 4x cheese-head screw M6 x 20, 4x cheese-head screw M6 x 30, 4x washer SK S6 		09 11 000 9943	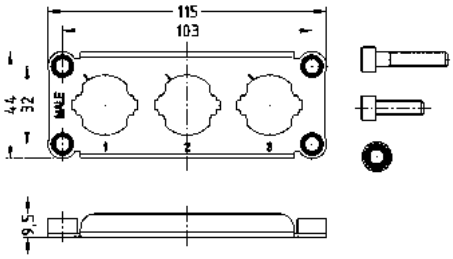
Han® HPR enlarged , Frame, for female inserts, 3x Han® HC Modular 250, Pack contents: 4x cheese-head screw M6 x 20, 4x cheese-head screw M6 x 30, 4x washer SK S6 		09 11 000 9944	

Features

- Contacts for fine stranded wire
- Low mating forces
- Suitable for HPR® hoods and housings
- UL approvals for axial-screw and screw termination

Technical characteristics

Electrical data acc. to IEC 61984	350 A 2.000 V 12 kV 3
Rated current	350 A
Rated voltage	2000 V
Rated impulse voltage	12 kV
Pollution degree	3
Insulation resistance	≥10^{10} Ω
Contact resistance	≤0.3 mΩ, ≤0.2 mΩ
Limiting temperature	-40 ... +125 °C
Mating cycles	≥500
Wire outer diameter	≤22 mm, ≤19,5 mm
Material (insert)	Polycarbonate, Polyamide
Colour (insert)	RAL 7032 (pebble grey)
Material (contacts)	Copper alloy
Material flammability class acc. to UL 94	V-0
RoHS	compliant, compliant with exemption
RoHS exemptions	**6c:** Copper alloy containing up to 4 % lead by weight, **6a:** Lead as an alloying element in steel for machining purposes and in galvanised steel containing up to 0,35 % lead by weight

Derating

Current carrying capacity

The current carrying capacity of the connectors is limited by the thermal load capability of the contact element material including the connections and the insulating parts. The derating curve is therefore valid for currents which flow constantly (non-intermittent) through each contact element of the connector evenly, without exceeding the allowed maximum temperature.

Measuring and testing techniques acc. to IEC 60512-5-2

Crimp termination

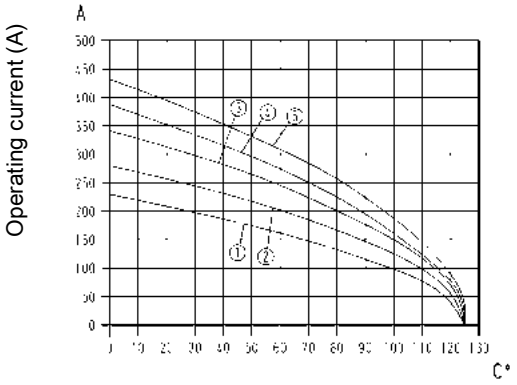

Ambient temperature (°C)

① Conductor cross-section 35 mm²
② Conductor cross-section 50 mm²
③ Conductor cross-section 70 mm²
④ Conductor cross-section 95 mm²
⑤ Conductor cross-section 120 mm²
Three contacts in Han® 24 HPR

Axial screw termination
Screw termination

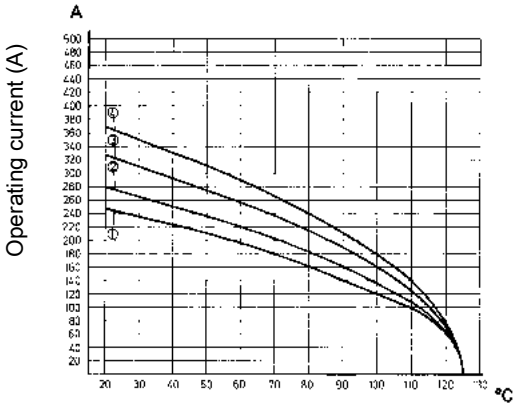

Ambient temperature (°C)

① Conductor cross-section 50 mm²
② Conductor cross-section 70 mm²
③ Conductor cross-section 95 mm²
④ Conductor cross-section 120 mm²
Three contacts in Han® 24 HPR

Specifications and approvals

EN 60664-1
IEC 61984
DNV GL
UL 1977 ECBT2.E235076

Details

Electrical data up to 350 A 4000 V 18 kV 3 by using a hexagonal adapter and the HARTING cable gland, in order to realise the clearance and creepage distance.

Contact resistance crimp contact: ≤ 0.3 mOhm

Contact resistance screw contact: ≤ 0.2 mOhm

Contact resistance axial screw contact: ≤ 0.2 mOhm

Remarks on the axial screw technique

The wire gauges mentioned in the catalogue refer to geometric wire gauges of cables.

Details

Hex key (A/F 5) see chapter 90

For more technical details (i.e. number of crimping operations or crimping position) see eCatalogue

Crimping tools see chapter 90

Remarks on the crimp technique

The wire gauges mentioned in the catalogue refer to geometric wire gauges of cables.

Han® HC Modular 350

350 A 2.000 V 12 kV 3

Identification	Conductor cross-section (mm²)	Part number Male	Part number Female	Drawing (dimensions in mm)
Han® HC Modular , 350, Crimp termination  Please order crimp contacts separately.	25 ... 120	09 11 001 3001	09 11 001 3101	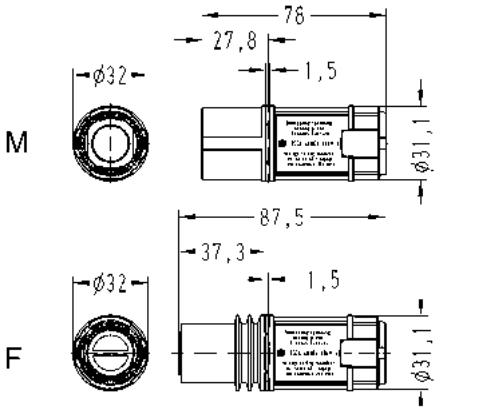 max. wire outer diameter 22 mm
TC 350 , Crimp contact, Contact surface: Silver plated 	25 35 50 70 95 120	09 11 000 6139 09 11 000 6140 09 11 000 6141 09 11 000 6142 09 11 000 6143 09 11 000 6144	09 11 000 6239 09 11 000 6240 09 11 000 6241 09 11 000 6242 09 11 000 6243 09 11 000 6244	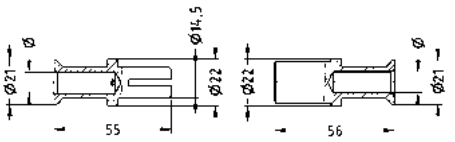

Wire gauge	∅	Stripping length
25 mm²	7	26 mm
35 mm²	8.2	26 mm
50 mm²	10	28 mm
70 mm²	11.5	28 mm
95 mm²	13.5	30 mm
120 mm²	15.5	24 mm

for stranded wire according to IEC 60228 Class 5
Crimp zone acc. to DIN 46235

Identification	Conductor cross-section (mm²)	Part number Male	Part number Female	Drawing (dimensions in mm)
TC 350 , Crimp contact, PE contact , Contact surface: Silver plated 	35	09 11 000 6172	09 11 000 6272	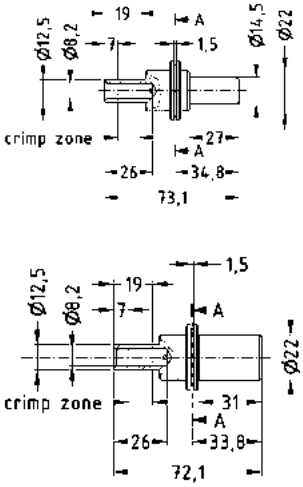

350 A 2.000 V 12 kV 3

Identification	Conductor cross-section (mm²)	Part number Male	Part number Female	Drawing (dimensions in mm)
Han® HC Modular , 350, Screw termination, Contact surface: Silver plated 	≤120	09 11 001 2655	09 11 001 2755	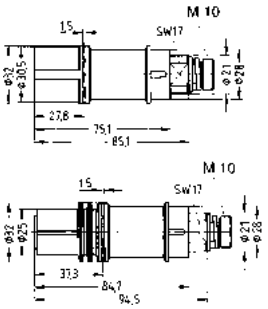 Tightening torque 14 Nm Cable shoe ≤ 120 mm² Please ensure to hold up the contact with a wrench size 17 to apply the tightening torque
TC 350 , Screw contact, PE contact , Contact surface: Silver plated 	120	09 11 000 6158	09 11 000 6258	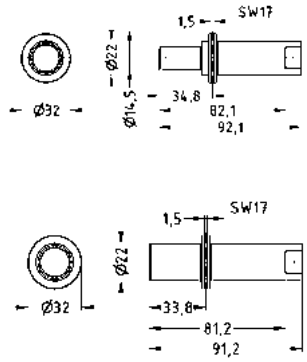 Tightening torque 14 Nm Cable shoe ≤ 120 mm² Please ensure to hold up the contact with a wrench size 17 to apply the tightening torque

Han® HC Modular 350

350 A 2.000 V 12 kV 3

Identification	Conductor cross-section (mm²)	Part number Male	Part number Female	Drawing (dimensions in mm)
Han® HC Modular , 350, Axial screw termination, Contact surface: Silver plated 	35 ... 70 95 ... 120	09 11 001 2651 09 11 001 2652	09 11 001 2751 09 11 001 2752	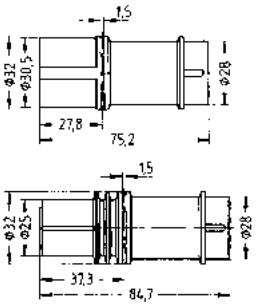 Tightening torque mm² 35 50 70 95 120 Nm 8 10 12 14 16 max. wire outer diameter 19.5 mm Stripping length 19...20 mm
TC 350 , Axial screw contact, PE contact , Contact surface: Silver plated 	35 ... 70	09 11 000 6156	09 11 000 6256	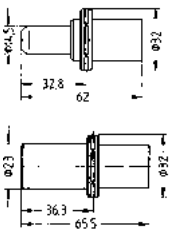 Tightening torque mm² 35 50 70 Nm 8 10 12 Stripping length 19...20 mm

Features

- Hoods/housings for harsh outdoor environments
- Metal hoods and housings with excellent corrosion resistance
- Corrosion resistance ASTM B117-09 (500 h)
- Excellent EMC characteristics
- Screw locking M6
- Field of application: for external electrical interconnections in vehicles, in highly demanding environments and wet areas, as well as for sensitive interconnections that have to be shielded
- Distinguishing feature: colour-coded black, internal seal

Technical characteristics

Limiting temperature	-40 ... +125 °C
Tightening torque (screw locking)	4 Nm
Degree of protection acc. to IEC 60529	IP65, IP68, IP69 / IPX9K acc. to ISO 20653
Type rating acc. to UL 50 / UL 50E	4, 4X, 12
Material (hood/housing)	Aluminium die-cast, Corrosion resistant
Surface (hood/housing)	Powder-coated
Colour (hood/housing)	RAL 9005 (jet black)
Material (seal)	NBR
Material (locking)	Stainless steel
Material (accessories)	Metal
RoHS	compliant, compliant with exemption
RoHS exemptions	**6c:** Copper alloy containing up to 4 % lead by weight

Specifications and approvals

UL 1977 ECBT2.E235076
CSA-C22.2 No. 182.3 ECBT8.E235076
DNV GL

Hoods/housings for harsh outdoor environments
Screw locking

Identification	Cable entry	Size	Part number	Drawing (dimensions in mm)
Han® HPR , Hoods, Top entry 	1x M25 1x M32		19 40 006 0411 19 40 006 0412	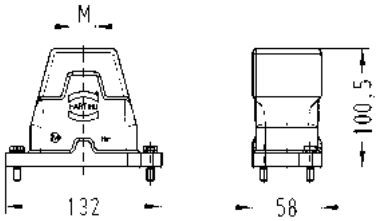
Han® HPR , Bulkhead mounted housings 			09 40 006 0311	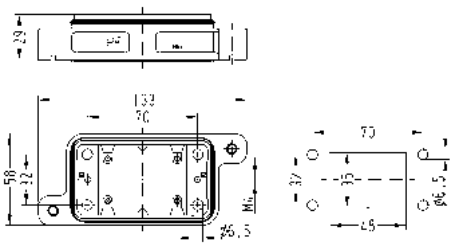
Han® HPR , Surface mounted housing, Horizontal version, Top entry 	1x M25 1x M40		19 40 006 0911 19 40 006 0913	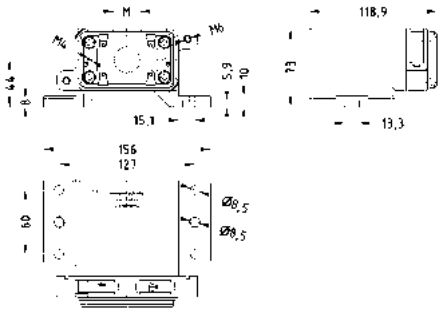
Mounting frames, Han® HPR, Thread M6 			09 40 000 9901	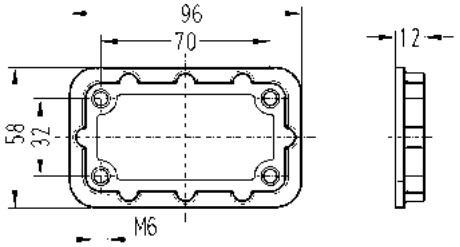

Identification	Cable entry	Size	Part number	Drawing (dimensions in mm)
Han® HPR , Frame, for male inserts, for female inserts, 1x Han® HC Modular 350 			09 11 000 9951	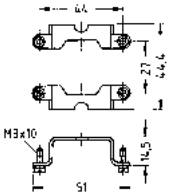 Tightening torque Fixing screws M3: 0.5 Nm
Hexagonal adapter, With O-ring  to reach the electrical data up to 4000 V 18 kV 3		M25 M32	19 36 000 5134 19 36 000 5135	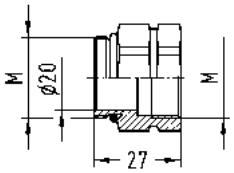 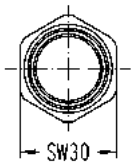

Hoods/housings for harsh outdoor environments
Screw locking

Identification	Cable entry	Size	Part number	Drawing (dimensions in mm)
Han® HPR , Hoods, Top entry 	2x M25		19 40 016 0431	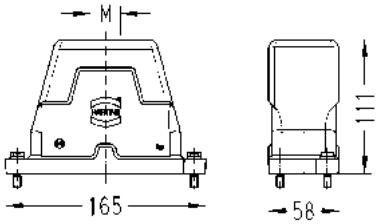
Han® HPR , Bulkhead mounted housings 			09 40 016 0311	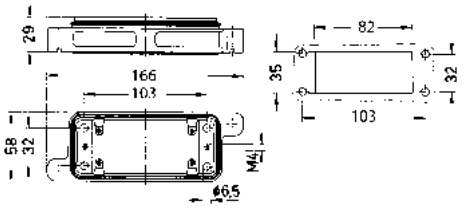
Mounting frames, Han® HPR, Thread M6 			09 40 000 9903	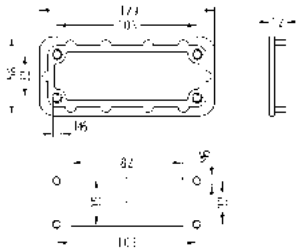 Panel cut out
Han® HPR , Frame, for male inserts, for female inserts, 2x Han® HC Modular 350 			09 11 000 9952	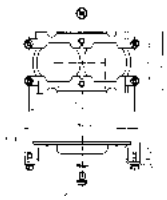 Tightening torque Fixing screws M3: 0.5 Nm Tightening torque Fixing screws M4: 1.5 Nm

Identification	Cable entry	Size	Part number	Drawing (dimensions in mm)
Hexagonal adapter, With O-ring  to reach the electrical data up to 4000 V 18 kV 3		M25	19 36 000 5134	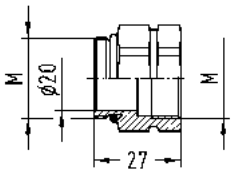

Hoods/housings for harsh outdoor environments
Screw locking

Identification	Cable entry	Size	Part number	Drawing (dimensions in mm)
Han® HPR , Hoods, Top entry 	2x M32		19 40 024 0432	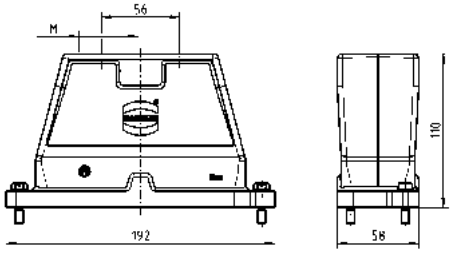
Han® HPR , Bulkhead mounted housings 			09 40 024 0311	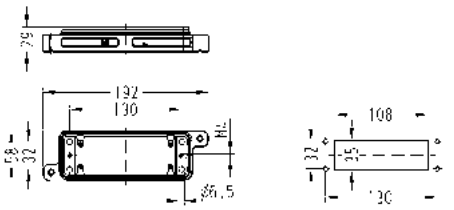
Mounting frames, Han® HPR, Thread M6 			09 40 000 9904	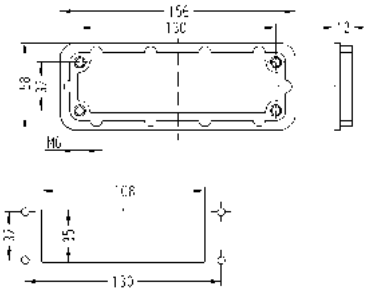 Panel cut out
Han® HPR , Frame, for male inserts, for female inserts, 2x Han® HC Modular 350 			09 11 000 9956	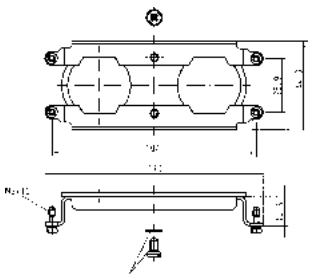 Tightening torque Fixing screws M3: 0.5 Nm Tightening torque Fixing screws M4: 1.5 Nm

Identification	Cable entry	Size	Part number	Drawing (dimensions in mm)
Hexagonal adapter, With O-ring  to reach the electrical data up to 4000 V 18 kV 3		M32	19 36 000 5135	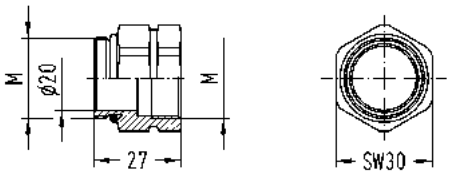

Hoods/housings for harsh outdoor environments
Screw locking

Identification	Cable entry	Size	Part number	Drawing (dimensions in mm)
Han® HPR , Hoods, Top entry 	3x M25		19 40 024 0461	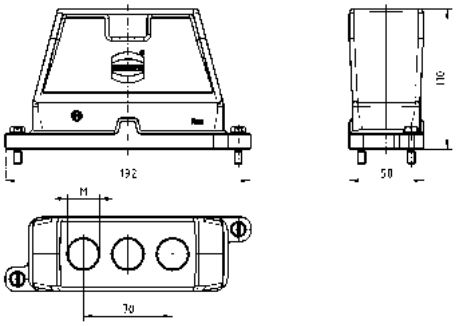
Han® HPR , Hoods, Top entry, High construction 	3x M32		19 40 024 0467	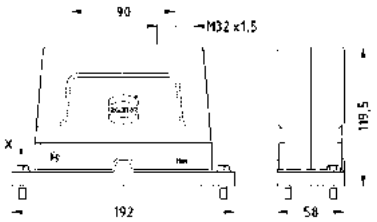
Han® HPR , Frame, for male inserts, for female inserts, 3x Han® HC Modular 350 			09 11 000 9963	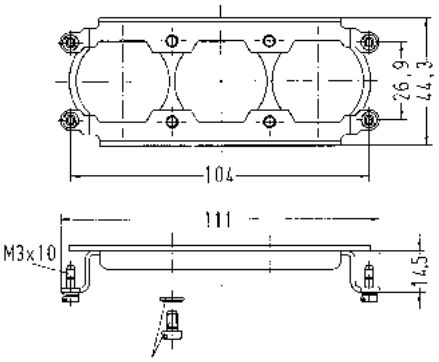 Tightening torque Fixing screws M3: 0.5 Nm Tightening torque Fixing screws M4: 1.5 Nm

Identification	Cable entry	Size	Part number	Drawing (dimensions in mm)
Hexagonal adapter, With O-ring  to reach the electrical data up to 4000 V 18 kV 3		M25 M32	19 36 000 5134 19 36 000 5135	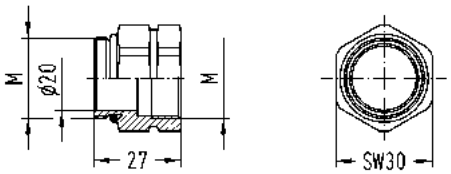

Hoods/housings for harsh outdoor environments
Screw locking

Identification	Cable entry	Size	Part number	Drawing (dimensions in mm)
Han® HPR , Bulkhead mounted housings 			09 40 024 0311	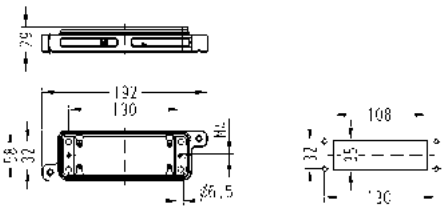
Han® HPR , Surface mounted housing, Horizontal version, Top entry 	3x M25		19 40 024 0931	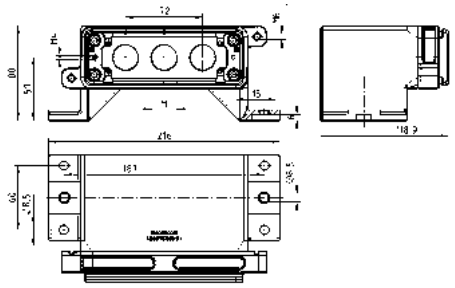
Han® HPR , Surface mounted housing, Top entry 	3x M25		19 40 024 1231	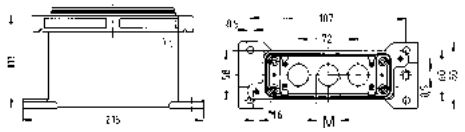
Mounting frames, Han® HPR, Thread M6 			09 40 000 9904	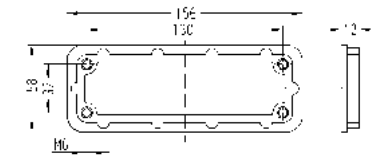 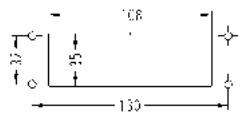 Panel cut out

Identification	Cable entry	Size	Part number	Drawing (dimensions in mm)
Han® HPR , Frame, for male inserts, for female inserts, 3x Han® HC Modular 350 			09 11 000 9963	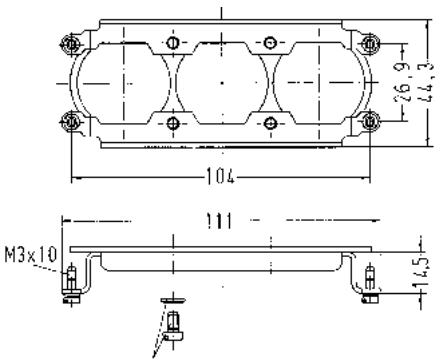 Tightening torque Fixing screws M3: 0.5 Nm Tightening torque Fixing screws M4: 1.5 Nm
Hexagonal adapter, With O-ring  to reach the electrical data up to 4000 V 18 kV 3		M25	19 36 000 5134	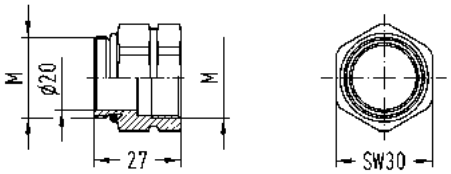

Hoods/housings for harsh outdoor environments
Screw locking

Identification	Cable entry	Size	Part number	Drawing (dimensions in mm)
Han® HPR , Hoods, Enlarged, Top entry 	3x M32		19 40 024 0468	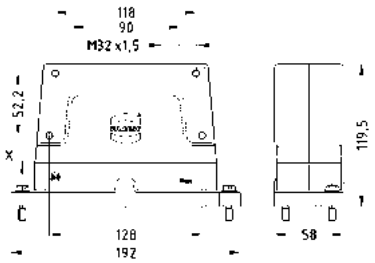
Han® HPR enlarged , Frame, for male inserts, 3x Han® HC Modular 350, Pack contents: 4x M4 screw, 4x washer SK S4, 4x washer SK S6, 4x cheese-head screw M6 x 20, 4x cheese-head screw M6 x 25 			09 11 000 9957	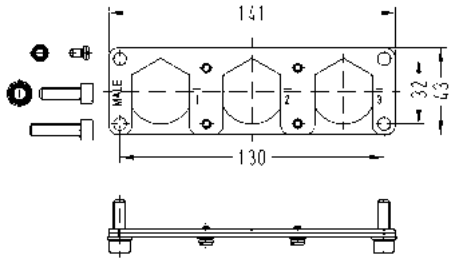 Tightening torque Fixing screws M6: 10 Nm Tightening torque Screws M4: 1.5 Nm
Han® HPR enlarged , Frame, for female inserts, 3x Han® HC Modular 350, Pack contents: 4x M4 screw, 4x washer SK S4, 4x washer SK S6, 4x cheese-head screw M6 x 20, 4x cheese-head screw M6 x 25 			09 11 000 9958	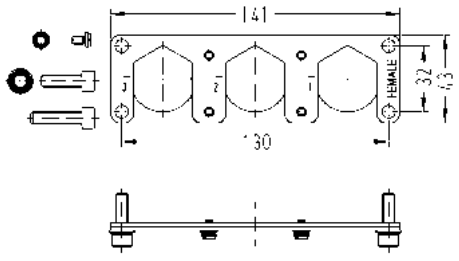 Tightening torque Fixing screws M6: 10 Nm Tightening torque Screws M4: 1.5 Nm
Hexagonal adapter, With O-ring  to reach the electrical data up to 4000 V 18 kV 3		M32	19 36 000 5135	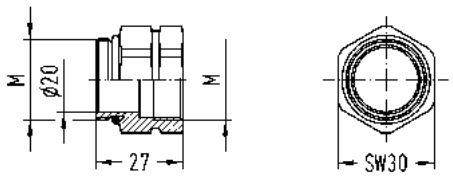

Hoods/housings for harsh outdoor environments
Screw locking

Identification	Cable entry	Part number	Drawing (dimensions in mm)
Han® HPR , Bulkhead mounted housings, Enlarged 		09 40 024 0368	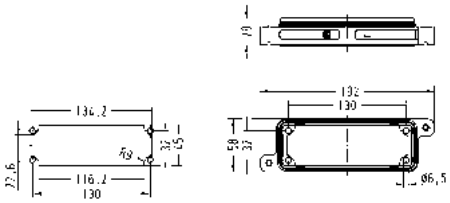
Han® HPR , Surface mounted housing, Horizontal version, Enlarged, Top entry  Bulkhead mounted housing 09 40 024 0368 not included, please order separately	3x M32	19 40 024 0968	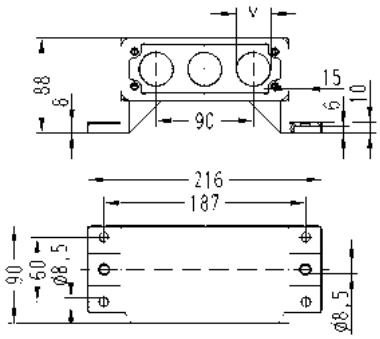
Mounting frames, Han® HPR, Thread M6 		09 40 000 9904	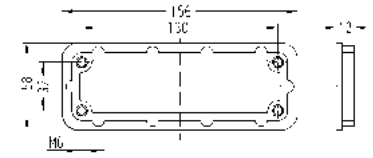 Panel cut out
Han® HPR enlarged , Frame, for male inserts, 3x Han® HC Modular 350, Pack contents: 4x M4 screw, 4x washer SK S4, 4x washer SK S6, 4x cheese-head screw M6 x 20, 4x cheese-head screw M6 x 25 		09 11 000 9957	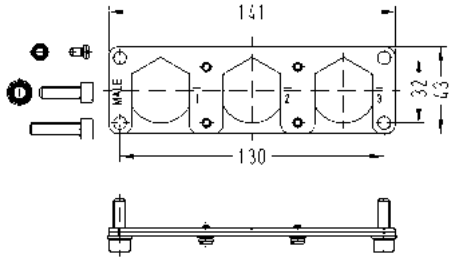 Tightening torque Fixing screws M6: 10 Nm Tightening torque Screws M4: 1.5 Nm

Identification	Cable entry	Part number	Drawing (dimensions in mm)
Han® HPR enlarged , Frame, for female inserts, 3x Han® HC Modular 350, Pack contents: 4x M4 screw, 4x washer SK S4, 4x washer SK S6, 4x cheese-head screw M6 x 20, 4x cheese-head screw M6 x 25 		09 11 000 9958	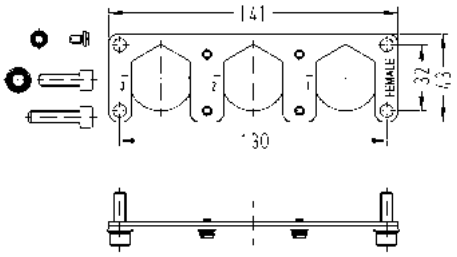 Tightening torque Fixing screws M6: 10 Nm Tightening torque Screws M4: 1.5 Nm

Hoods/housings for harsh outdoor environments
Screw locking

Identification	Cable entry	Size	Part number	Drawing (dimensions in mm)
Han® HPR , Hoods, Enlarged, Top entry 	4x M25		19 40 024 0478	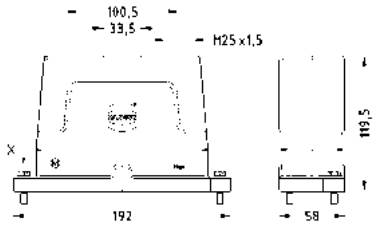
Han® HPR enlarged , Frame, for male inserts, 4x Han® HC Modular 350, Pack contents: 4x M4 screw, 4x washer SK S4, 4x washer SK S6, 4x cheese-head screw M6 x 20, 4x cheese-head screw M6 x 25, 4x heat shrink tube 			09 11 000 9964	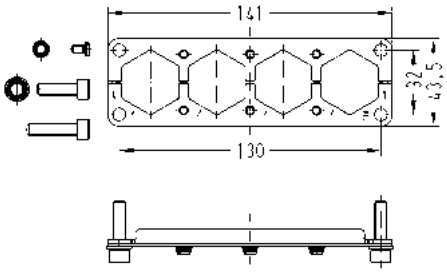 Tightening torque Fixing screws M6: 10 Nm Tightening torque Screws M4: 1.5 Nm
Han® HPR enlarged , Frame, for female inserts, 4x Han® HC Modular 350, Pack contents: 4x M4 screw, 4x washer SK S4, 4x washer SK S6, 4x cheese-head screw M6 x 20, 4x cheese-head screw M6 x 25, 4x heat shrink tube 			09 11 000 9965	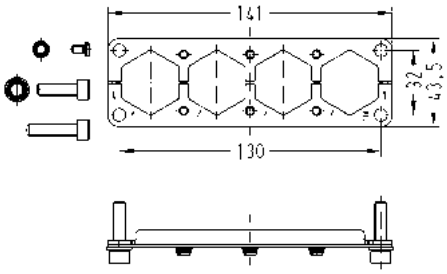 Tightening torque Fixing screws M6: 10 Nm Tightening torque Screws M4: 1.5 Nm
Hexagonal adapter, With O-ring  to reach the electrical data up to 4000 V 18 kV 3		M25	19 36 000 5134	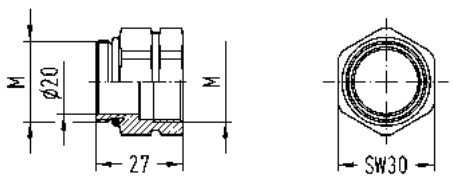

Hoods/housings for harsh outdoor environments
Screw locking

Identification	Cable entry	Part number	Drawing (dimensions in mm)
Han® HPR , Bulkhead mounted housings, Enlarged 		09 40 024 0368	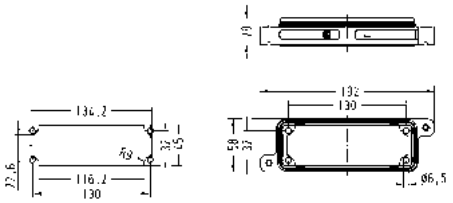
Han® HPR , Surface mounted housing, Horizontal version, Enlarged, Top entry  Bulkhead mounted housing 09 40 024 0368 not included, please order separately	4x M25	19 40 024 0978	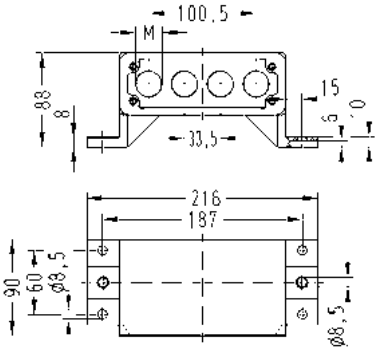
Mounting frames, Han® HPR, Thread M6 		09 40 000 9904	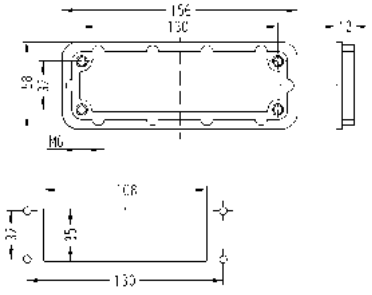 Panel cut out

Identification	Cable entry	Part number	Drawing (dimensions in mm)
Han® HPR enlarged , Frame, for male inserts, 4x Han® HC Modular 350, Pack contents: 4x M4 screw, 4x washer SK S4, 4x washer SK S6, 4x cheese-head screw M6 x 20, 4x cheese-head screw M6 x 25, 4x heat shrink tube 		09 11 000 9964	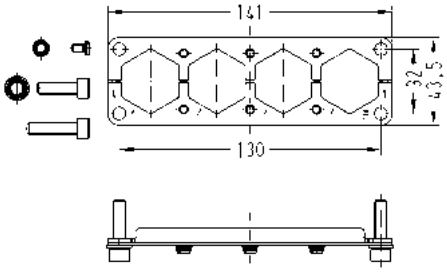 Tightening torque Fixing screws M6: 10 Nm Tightening torque Screws M4: 1.5 Nm
Han® HPR enlarged , Frame, for female inserts, 4x Han® HC Modular 350, Pack contents: 4x M4 screw, 4x washer SK S4, 4x washer SK S6, 4x cheese-head screw M6 x 20, 4x cheese-head screw M6 x 25, 4x heat shrink tube 		09 11 000 9965	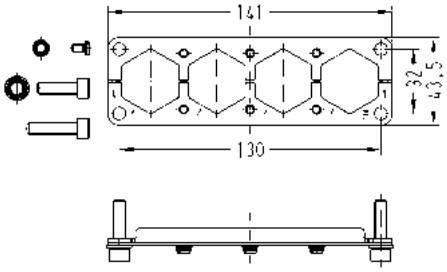 Tightening torque Fixing screws M6: 10 Nm Tightening torque Screws M4: 1.5 Nm

Han® M hoods/housings for Han® HC Modular 350

Features

- Hoods/housings for rough environments
- Metal hoods and housings with excellent corrosion resistance
- Corrosion resistance ASTM B117-09 (500 h)
- Locking lever made of high-quality stainless steel

Technical characteristics

Limiting temperature	-40 ... +125 °C
Degree of protection acc. to IEC 60529	IP65
Type rating acc. to UL 50 / UL 50E	4, 4X, 12
Material (hood/housing)	Aluminium die-cast
Surface (hood/housing)	Powder-coated
Colour (hood/housing)	RAL 9005 (jet black)
Material (seal)	FPM
Material (locking)	Stainless steel
Material (accessories)	Metal
RoHS	compliant

Specifications and approvals

UL 1977 ECBT2.E235076
CSA-C22.2 No. 182.3 ECBT8.E235076
DNV GL

Han® M hoods/housings for Han® HC Modular 350 Size 48 B

Hoods/housings for rough environments
Single locking lever

Identification	Cable entry	Part number	Drawing (dimensions in mm)
Han® M , Hoods, Top entry 	4x M25	19 37 048 0401	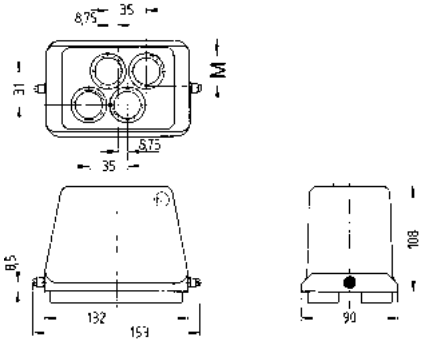
Han® M , Frame, for male inserts, for female inserts, 4x HC 350 contacts + 2x Han® Q 5/0 in a hood 		09 11 000 9954	 Tightening torque Fixing screws M3: 0.5 Nm Tightening torque Fixing screws Han® Q 5/0: 0.25 Nm Tightening torque Cross-tying screws 1.5 Nm

Han® M hoods/housings for Han® HC Modular 350 Size 48 B

Hoods/housings for rough environments
Single locking lever

Identification	Part number	Drawing (dimensions in mm)
Han® M , Bulkhead mounted housings, With thermo-plastic cover 	09 37 048 0301	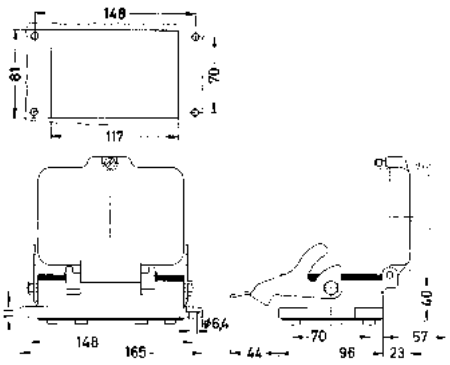
Han® M , Frame, for male inserts, for female inserts, 4x HC 350 contacts + 2x Han® Q 5/0 in a bulkhead mounted housing 	09 11 000 9955	 Tightening torque Fixing screws M3: 0.5 Nm Tightening torque Fixing screws Han® Q 5/0: 0.25 Nm Tightening torque Cross-tying screws 1.5 Nm

Features

- Contacts for fine stranded wire
- Low mating forces
- Suitable for HPR® hoods and housings
- UL approvals for axial-screw and screw termination

Technical characteristics

Electrical data acc. to IEC 61984	650 A 4.000 V 18 kV 3
Rated current	650 A
Rated voltage	4000 V
Rated impulse voltage	18 kV
Pollution degree	3
Insulation resistance	≥10^{10} Ω
Contact resistance	≤0.3 mΩ, ≤0.2 mΩ
Limiting temperature	-40 ... +125 °C
Mating cycles	≥500
Wire outer diameter	≤27 mm, ≤32 mm @ 240 mm², ≤26,5 mm
Material (insert)	Polycarbonate, Polyamide
Colour (insert)	RAL 7032 (pebble grey)
Material (contacts)	Copper alloy
Material flammability class acc. to UL 94	V-0
RoHS	compliant, compliant with exemption
RoHS exemptions	**6c:** Copper alloy containing up to 4 % lead by weight, **6a:** Lead as an alloying element in steel for machining purposes and in galvanised steel containing up to 0,35 % lead by weight

Derating

Current carrying capacity

The current carrying capacity of the connectors is limited by the thermal load capability of the contact element material including the connections and the insulating parts. The derating curve is therefore valid for currents which flow constantly (non-intermittent) through each contact element of the connector evenly, without exceeding the allowed maximum temperature.

Measuring and testing techniques acc. to IEC 60512-5-2

Crimp termination

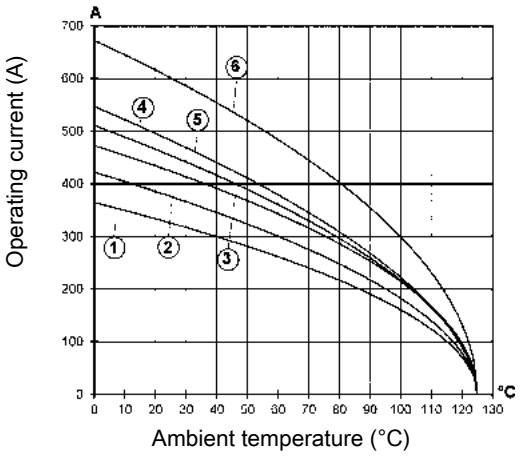

① Conductor cross-section 70 mm²
② Conductor cross-section 95 mm²
③ Conductor cross-section 120 mm²
④ Conductor cross-section 150 mm²
⑤ Conductor cross-section 185 mm²
⑥ Conductor cross-section 240 mm²

Screw termination / axial screw termination

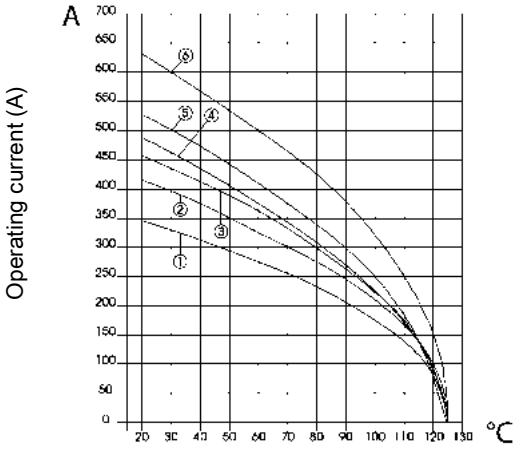

① Conductor cross-section 70 mm²
② Conductor cross-section 95 mm²
③ Conductor cross-section 120 mm²
④ Conductor cross-section 150 mm²
⑤ Conductor cross-section 185 mm²
⑥ Conductor cross-section 240 mm²

Specifications and approvals

EN 60664-1
IEC 61984
DNV GL
UL 1977 ECBT2.E235076

Details

Contact resistance crimp contact: ≤ 0.3 mOhm

Contact resistance screw contact: ≤ 0.2 mOhm

Contact resistance axial screw contact: ≤ 0.2 mOhm

Details

Remarks on the axial screw technique
The wire gauges mentioned in the catalogue refer to geometric wire gauges of cables.

Hex key (A/F 8) see chapter 90

For more technical details (i.e. number of crimping operations or crimping position) see eCatalogue

Crimping tools see chapter 90

Remarks on the crimp technique
The wire gauges mentioned in the catalogue refer to geometric wire gauges of cables.

Han® HC Modular 650

650 A 4.000 V 18 kV 3

Identification	Conductor cross-section (mm²)	Part number Male	Part number Female	Drawing (dimensions in mm)
Han® HC Modular , 650, Crimp termination  Please order crimp contacts separately.	70 ... 240	09 11 001 3012	09 11 001 3112	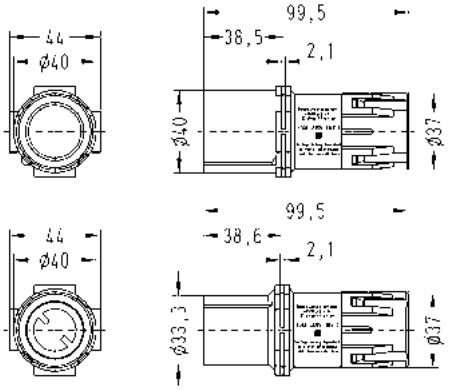 max. wire outer diameter 70...185 mm²: 27 mm max. wire outer diameter 240 mm²: 32 mm
TC 650 , Crimp contact, Contact surface: Silver plated 	70 95 120 150 185 240	09 11 000 6161 09 11 000 6162 09 11 000 6163 09 11 000 6164 09 11 000 6165 09 11 000 6168	09 11 000 6261 09 11 000 6262 09 11 000 6263 09 11 000 6264 09 11 000 6265 09 11 000 6268	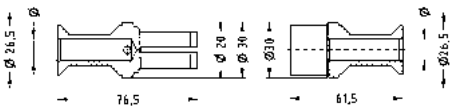

Conductor cross-section	Ø	Stripping length
70 mm²	11.5	42 mm
95 mm²	13.5	42 mm
120 mm²	15.5	42 mm
150 mm²	17	42 mm
185 mm²	19	42 mm
240 mm²	21.5	46 mm
for stranded wire according to IEC 60228 Class 5		

Crimp zone acc. to DIN 46235

650 A 4.000 V 18 kV 3

Identification	Conductor cross-section (mm²)	Part number Male	Part number Female	Drawing (dimensions in mm)
Han® HC Modular , 650, Screw termination, Contact surface: Silver plated 	≤240	09 11 001 2675	09 11 001 2775	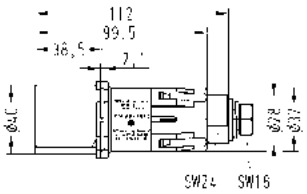 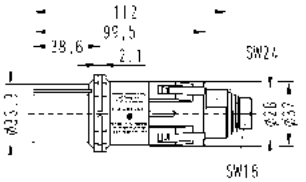 Tightening torque 16 ... 18 Nm Cable shoe ≤ 240 mm² Please ensure to hold up the contact with a wrench size 24 to apply the tightening torque
Han® HC Modular , 650, Axial screw termination, Contact surface: Silver plated 	70 ... 120 150 ... 185	09 11 001 2671 09 11 001 2672	09 11 001 2771 09 11 001 2772	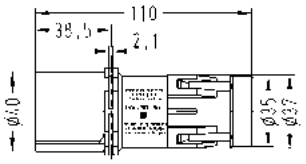 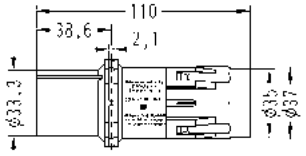 Tightening torque mm² 70 95 120 150 185 Nm 12 14 16 17 18 Stripping length 23 ... 25 mm max. wire outer diameter 26.5 mm

Features

- Hoods/housings for harsh outdoor environments
- Metal hoods and housings with excellent corrosion resistance
- Corrosion resistance ASTM B117-09 (500 h)
- Excellent EMC characteristics
- Screw locking M6
- Field of application: for external electrical interconnections in vehicles, in highly demanding environments and wet areas, as well as for sensitive interconnections that have to be shielded
- Distinguishing feature: colour-coded black, internal seal

Technical characteristics

Limiting temperature	-40 ... +125 °C
Tightening torque (screw locking)	4 Nm
Degree of protection acc. to IEC 60529	IP65, IP68, IP69 / IPX9K acc. to ISO 20653
Type rating acc. to UL 50 / UL 50E	4, 4X, 12
Material (hood/housing)	Aluminium die-cast, Corrosion resistant
Surface (hood/housing)	Powder-coated
Colour (hood/housing)	RAL 9005 (jet black)
Material (seal)	NBR
Material (locking)	Stainless steel
Material (accessories)	Metal
RoHS	compliant with exemption, compliant
RoHS exemptions	**6c:** Copper alloy containing up to 4 % lead by weight

Specifications and approvals

UL 1977 ECBT2.E235076
CSA-C22.2 No. 182.3 ECBT8.E235076
DNV GL

Hoods/housings for harsh outdoor environments
Screw locking

Identification	Cable entry	Part number	Drawing (dimensions in mm)
Han® HPR , Hoods, With adapter, Top entry 	1x M40	19 40 006 0418	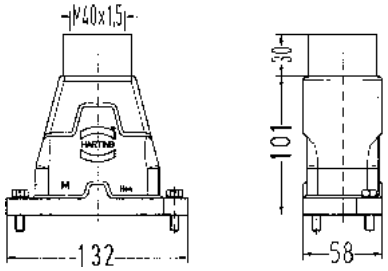
Han® HPR , Bulkhead mounted housings 		09 40 006 0314	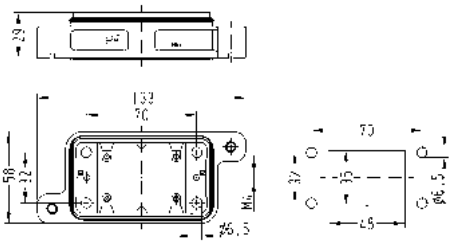
Han® HPR , Frame, for male inserts, for female inserts, 1x Han® HC Modular 650 		09 11 000 9971	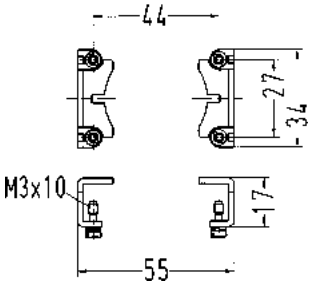 Tightening torque Fixing screws M3: 0.5 Nm

Hoods/housings for harsh outdoor environments
Screw locking

Identification	Cable entry	Part number	Drawing (dimensions in mm)
Han® HPR , Hoods, With adapter, Top entry 	2x M40	19 40 024 0438	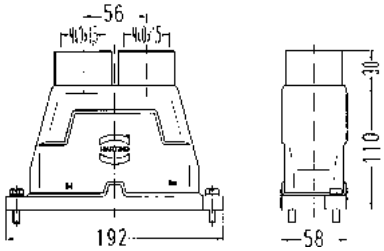
Han® HPR , Frame, for male inserts, for female inserts, 2x Han® HC Modular 650 		09 11 000 9972	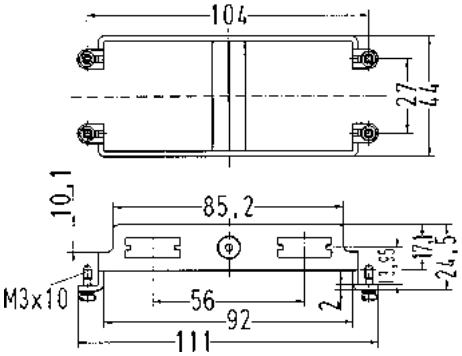 Tightening torque Fixing screws M3: 0.5 Nm Tightening torque M4: 1.5 Nm

Hoods/housings for harsh outdoor environments
Screw locking

Identification	Part number	Drawing (dimensions in mm)
Han® HPR , Bulkhead mounted housings 	09 40 024 0311	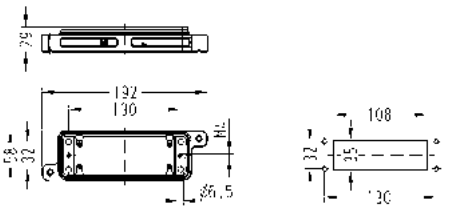
Mounting frames, Han® HPR, Thread M6 	09 40 000 9955	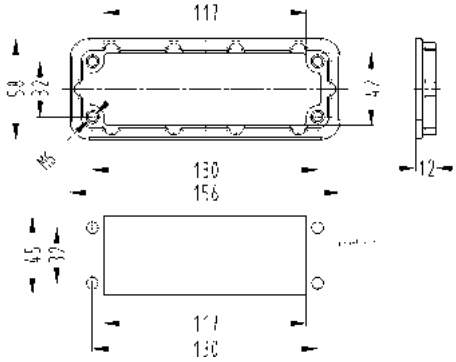
Han® HPR , Frame, for male inserts, for female inserts, 2x Han® HC Modular 650 	09 11 000 9972	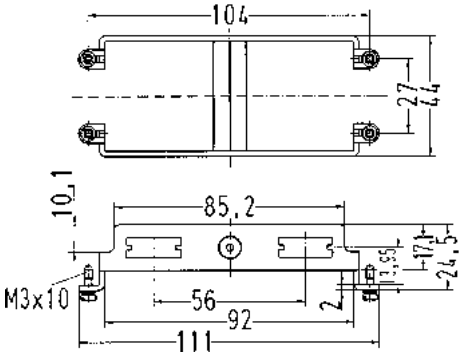 Tightening torque Fixing screws M3: 0.5 Nm Tightening torque M4: 1.5 Nm

Hoods/housings for harsh outdoor environments
Screw locking

Identification	Cable entry	Size	Part number	Drawing (dimensions in mm)
Han® HPR , Hoods, Enlarged, Top entry 	3x M32		19 40 024 0468	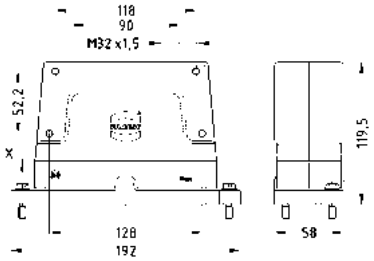
Han® HPR enlarged , Frame, for male inserts, 3x Han® HC Modular 650, Pack contents: 4x M4 screw, 4x washer SK S4, 4x washer SK S6, 4x cheese-head screw M6 x 20, 4x cheese-head screw M6 x 25 			09 11 000 9973	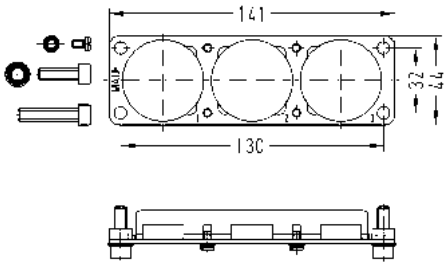 Tightening torque Fixing screws M6: 10 Nm Tightening torque Screws M4: 1.5 Nm
Han® HPR enlarged , Frame, for female inserts, 3x Han® HC Modular 650, Pack contents: 4x M4 screw, 4x washer SK S4, 4x washer SK S6, 4x cheese-head screw M6 x 20, 4x cheese-head screw M6 x 25 			09 11 000 9974	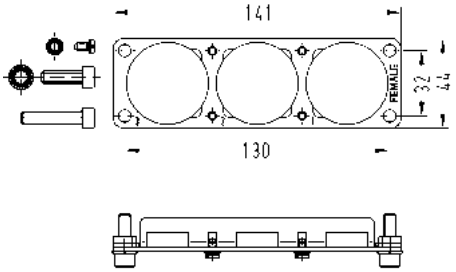 Tightening torque Fixing screws M6: 10 Nm Tightening torque Screws M4: 1.5 Nm
Hexagonal adapter, With O-ring  to reach the electrical data up to 4000 V 18 kV 3		M32	19 36 000 5135	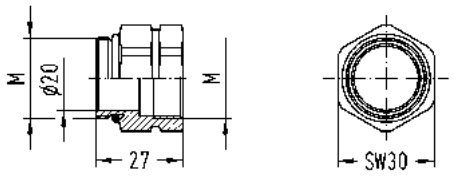

Hoods/housings for harsh outdoor environments
Screw locking

Identification	Cable entry	Size	Part number	Drawing (dimensions in mm)
Han® HPR , Bulkhead mounted housings, Enlarged 			09 40 024 0368	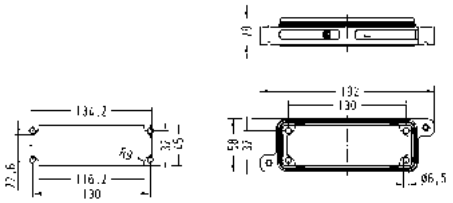
Han® HPR , Surface mounted housing, Horizontal version, Enlarged, Top entry  Bulkhead mounted housing 09 40 024 0368 not included, please order separately	3x M32		19 40 024 0968	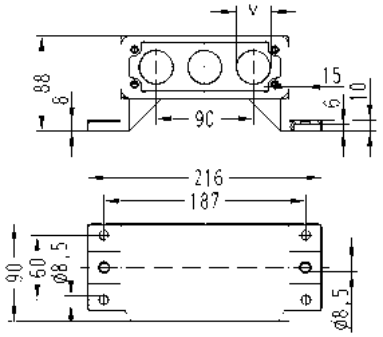
Mounting frames, Han® HPR, Thread M6 			09 40 000 9955	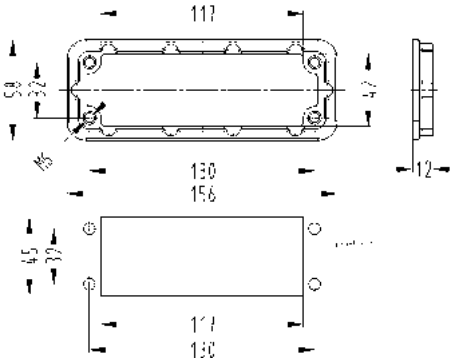
Han® HPR enlarged , Frame, for male inserts, 3x Han® HC Modular 650, Pack contents: 4x M4 screw, 4x washer SK S4, 4x washer SK S6, 4x cheese-head screw M6 x 20, 4x cheese-head screw M6 x 25 			09 11 000 9973	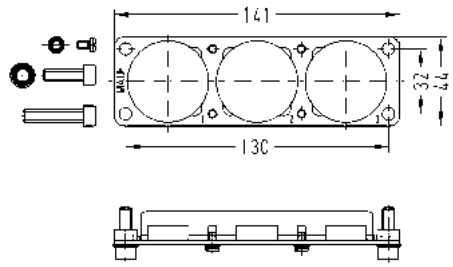 Tightening torque Fixing screws M6: 10 Nm Tightening torque Screws M4: 1.5 Nm

Identification	Cable entry	Size	Part number	Drawing (dimensions in mm)
Han® HPR enlarged , Frame, for female inserts, 3x Han® HC Modular 650, Pack contents: 4x M4 screw, 4x washer SK S4, 4x washer SK S6, 4x cheese-head screw M6 x 20, 4x cheese-head screw M6 x 25 			09 11 000 9974	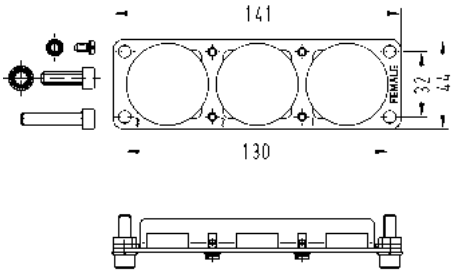 Tightening torque Fixing screws M6: 10 Nm Tightening torque Screws M4: 1.5 Nm
Hexagonal adapter, With O-ring  to reach the electrical data up to 4000 V 18 kV 3		M32	19 36 000 5135	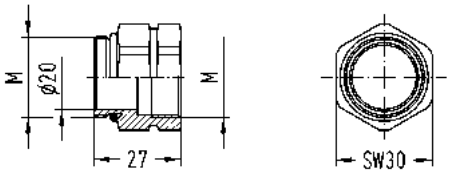

Han® 24 HPR EasyCon

Features

- Hoods/Housings for higher EMC requirements
- Easy assembly due to split hood and surface mounted housing
- Many assembly possibilities due to separate assembly panels
- External termination of PE termination on hood and surface mounted housing
- Ideal motor/drive connector for transportation sector
- Secure and a visible connection of screening braid of shielded cables

Technical characteristics

Limiting temperature	-40 ... +125 °C
Tightening torque (screw locking)	4 Nm
Degree of protection acc. to IEC 60529	IP65, IP68, IP69 / IPX9K acc. to ISO 20653
Type rating acc. to UL 50 / UL 50E	4, 4X, 12
Material (hood/housing)	Aluminium die-cast, Corrosion resistant
Surface (hood/housing)	Powder-coated
Colour (hood/housing)	RAL 9005 (jet black)
Material (seal)	NBR
Material (locking)	Stainless steel
Material (accessories)	Metal, Stainless steel
RoHS	compliant

Specifications and approvals

UL 1977 ECBT2.E235076
CSA-C22.2 No. 182.3 ECBT8.E235076
DNV GL

Details

Insertion / Removal tool 09 99 000 0334 for shielding clamps see chapter 90

Screw locking

Identification	Cable entry	Part number	Drawing (dimensions in mm)
Han® HPR EasyCon , Hoods 		09 40 024 0451	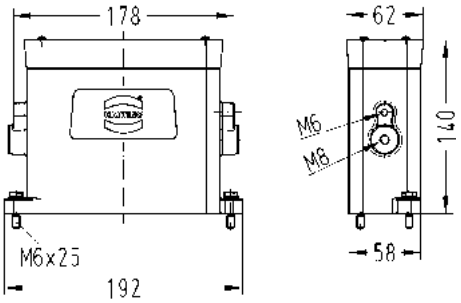 Tightening torque Cover locking 6 Nm Tightening torque External PE 15 Nm
Han® HPR EasyCon , Surface mounted housing 		09 40 024 0951	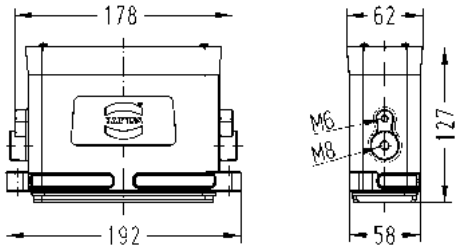 Tightening torque Cover locking 6 Nm Tightening torque External PE 15 Nm
Han® HPR EasyCon , Mounting cover, for surface mounted housings, for hoods 	3x M25 3x M32 4x M25	19 40 024 9901 19 40 024 9903 19 40 024 9902	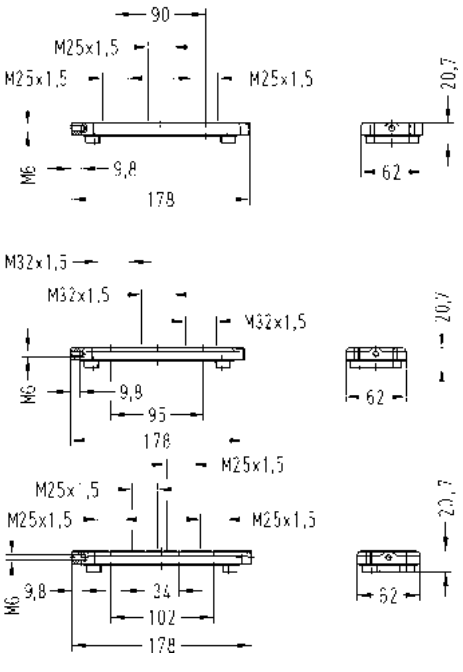

Identification	Cable entry	Part number	Drawing (dimensions in mm)
Mounting panel, Long version, Pack contents: 6x M6 screw, 6x washer SK S6 		09 40 000 9925	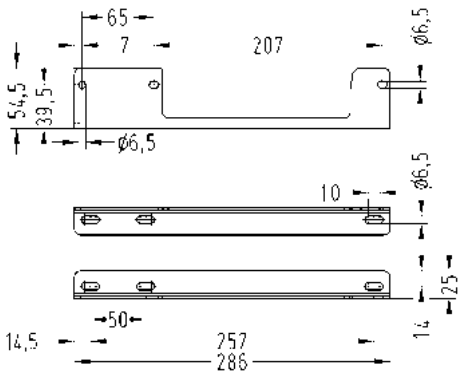 Tightening torque Fixing screws M6: 6 Nm
Mounting panel, Short version, Pack contents: 4x M6 screw, 4x washer SK S6 		09 40 000 9926	 Tightening torque Fixing screws M6: 6 Nm
Han® HPR EasyCon , Frame, for male inserts, 4x Han® HC Modular 250, Pack contents: 2x distance bolt (SW 7), 2x M4 screw, 2x washer SK S4 		09 40 024 9903	 Tightening torque Distance bolt 6 Nm Tightening torque Fixing screws M4: 1.5 Nm
Han® HPR EasyCon , Frame, for female inserts, 4x Han® HC Modular 250, Pack contents: 2x distance bolt (SW 7), 2x M4 screw, 2x washer SK S4 		09 40 024 9904	 Tightening torque Distance bolt 6 Nm Tightening torque Fixing screws M4: 1.5 Nm

Identification	Cable entry	Part number	Drawing (dimensions in mm)
Han® HPR EasyCon , Frame, for male inserts, 3x Han® HC Modular 350, Pack contents: 2x distance bolt (A/F 7), 4x M4 screw, 4x washer SK S4		09 40 024 9911	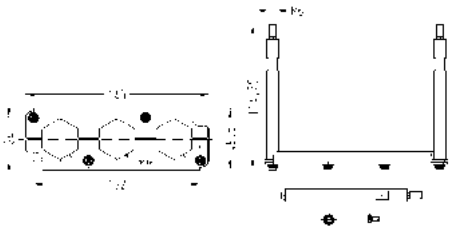 Tightening torque Distance bolt 6 Nm Tightening torque Fixing screws M4: 1.5 Nm
Han® HPR EasyCon , Frame, for female inserts, 3x Han® HC Modular 350, Pack contents: 2x distance bolt (A/F 7), 4x M4 screw, 4x washer SK S4		09 40 024 9912	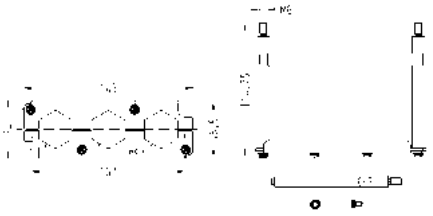 Tightening torque Distance bolt 6 Nm Tightening torque Fixing screws M4: 1.5 Nm
Han® HPR EasyCon , Frame, for male inserts, 4x Han® HC Modular 350, Pack contents: 2x distance bolt (A/F 7), 4x M4 screw, 4x washer SK S4, 4x heat shrink tube		09 40 024 9913	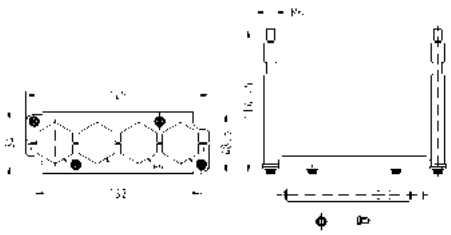 Tightening torque Distance bolt 6 Nm Tightening torque Fixing screws M4: 1.5 Nm
Han® HPR EasyCon , Frame, for female inserts, 4x Han® HC Modular 350, Pack contents: 2x distance bolt (A/F 7), 4x M4 screw, 4x washer SK S4, 4x heat shrink tube		09 40 024 9914	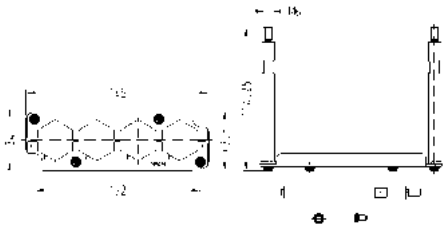 Tightening torque Distance bolt 6 Nm Tightening torque Fixing screws M4: 1.5 Nm

Identification	Cable entry	Part number	Drawing (dimensions in mm)
Han® HPR EasyCon , Frame, for male inserts, 3x Han® HC Modular 650, Pack contents: 2x distance bolt (A/F 7), 2x M4 screw, 2x washer SK S4, 2x M4 countersunk screw 		09 40 024 9921	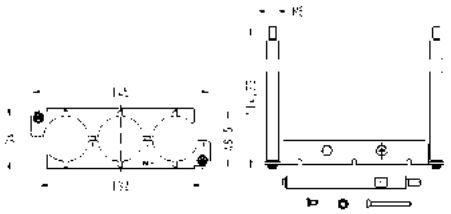 Tightening torque Distance bolt 6 Nm Tightening torque Fixing screws M4: 1.5 Nm Tightening torque M4: 1.5 Nm
Han® HPR EasyCon , Frame, for female inserts, 3x Han® HC Modular 650, Pack contents: 2x distance bolt (A/F 7), 2x M4 screw, 2x washer SK S4, 2x M4 countersunk screw 		09 40 024 9922	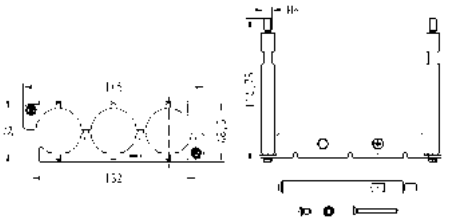 Tightening torque Distance bolt 6 Nm Tightening torque Fixing screws M4: 1.5 Nm Tightening torque M4: 1.5 Nm
Han® HPR EasyCon , Frame, for up to 8 single modules, A … H, Pack contents: 2x M4/M5 distance bolts (A/F 7), 2x M5/M6 distance bolts (A/F 7), 4x M4 screw, 4x washer SK S4 		09 40 024 9931	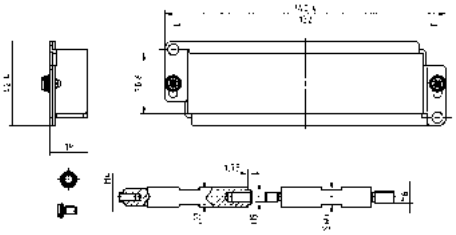 Tightening torque Distance bolt 6 Nm Tightening torque Fixing screws M4: 1.5 Nm Tightening torque M4: 1.5 Nm
Han® HPR EasyCon , Frame, for up to 8 single modules, a … h, Pack contents: 2x M4/M5 distance bolts (A/F 7), 2x M5/M6 distance bolts (A/F 7), 4x M4 screw, 4x washer SK S4 		09 40 024 9932	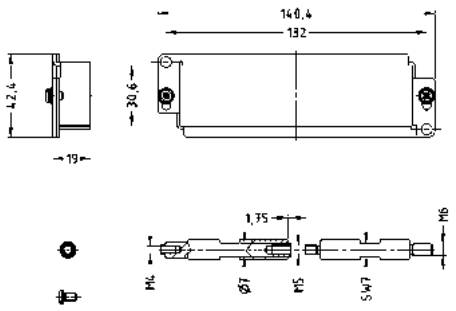 Tightening torque Distance bolt 6 Nm Tightening torque Fixing screws M4: 1.5 Nm Tightening torque M4: 1.5 Nm

Han® 24 HPR EasyCon - enlarged

Size 24 B

Hoods/housings for harsh outdoor environments
Screw locking

Identification	Part number	Drawing (dimensions in mm)
Han® HPR , Bulkhead mounted housings, Enlarged 	09 40 024 0368	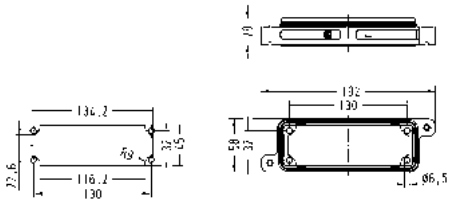
Mounting frames, Han® HPR, Thread M6 	09 40 000 9955	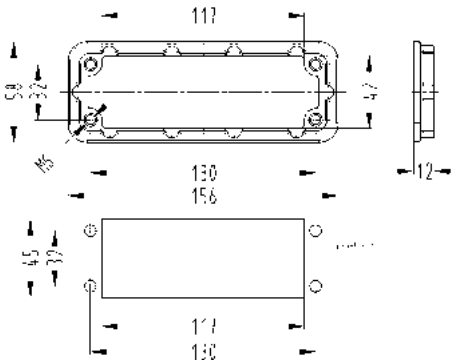
Han® HPR enlarged , Frame, for male inserts, 4x Han® HC Modular 250, Pack contents: 4x cheese-head screw M6 x 20, 4x cheese-head screw M6 x 25, 4x washer SK S6 	09 11 000 9927	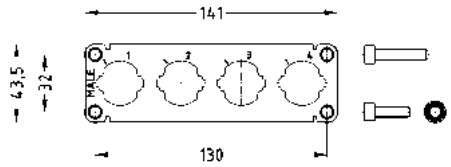 Tightening torque Fixing screws M6: 10 Nm
Han® HPR enlarged , Frame, for female inserts, 4x Han® HC Modular 250, Pack contents: 4x cheese-head screw M6 x 20, 4x cheese-head screw M6 x 25, 4x washer SK S6 	09 11 000 9928	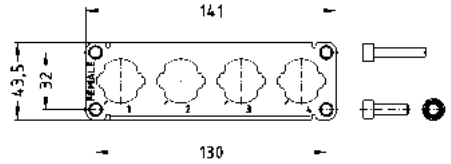 Tightening torque Fixing screws M6: 10 Nm

Han® 24 HPR EasyCon - enlarged

Size 24 B

Identification	Part number	Drawing (dimensions in mm)
Han® HPR enlarged , Frame, for male inserts, 3x Han® HC Modular 250, Pack contents: 4x cheese-head screw M6 x 20, 4x cheese-head screw M6 x 25, 4x washer SK S6	09 11 000 9931	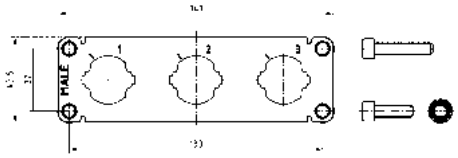 Tightening torque Fixing screw M6: 10 Nm
		
Han® HPR enlarged , Frame, for female inserts, 3x Han® HC Modular 250, Pack contents: 4x cheese-head screw M6 x 20, 4x cheese-head screw M6 x 25, 4x washer SK S6	09 11 000 9932	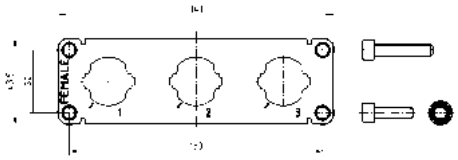 Tightening torque Fixing screw M6: 10 Nm
		
Han® HPR enlarged , Frame, for male inserts, 3x Han® HC Modular 250, Pack contents: 4x cheese-head screw M6 x 20, 4x cheese-head screw M6 x 30, 4x washer SK S6	09 11 000 9943	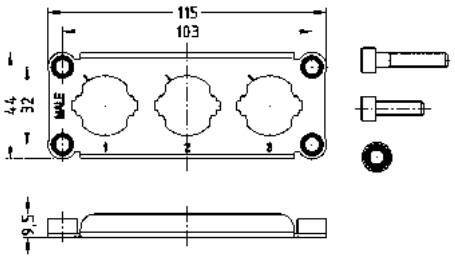
		
Han® HPR enlarged , Frame, for female inserts, 3x Han® HC Modular 250, Pack contents: 4x cheese-head screw M6 x 20, 4x cheese-head screw M6 x 30, 4x washer SK S6	09 11 000 9944	
		
Han® HPR enlarged , Frame, for male inserts, 3x Han® HC Modular 350, Pack contents: 4x M4 screw, 4x washer SK S4, 4x washer SK S6, 4x cheese-head screw M6 x 20, 4x cheese-head screw M6 x 25	09 11 000 9957	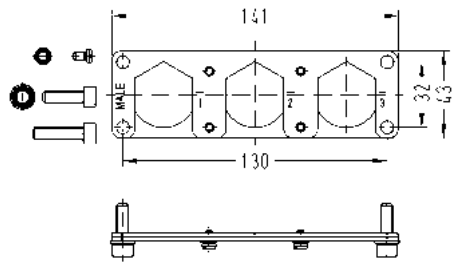 Tightening torque Fixing screws M6: 10 Nm Tightening torque Screws M4: 1.5 Nm
		

Han® 24 HPR EasyCon - enlarged

Size 24 B

Identification	Part number	Drawing (dimensions in mm)
Han® HPR enlarged , Frame, for female inserts, 3x Han® HC Modular 350, Pack contents: 4x M4 screw, 4x washer SK S4, 4x washer SK S6, 4x cheese-head screw M6 x 20, 4x cheese-head screw M6 x 25	09 11 000 9958	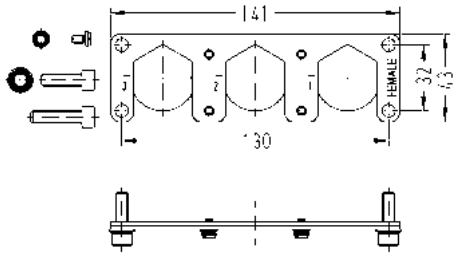 Tightening torque Fixing screws M6: 10 Nm Tightening torque Screws M4: 1.5 Nm
Han® HPR enlarged , Frame, for male inserts, 4x Han® HC Modular 350, Pack contents: 4x M4 screw, 4x washer SK S4, 4x washer SK S6, 4x cheese-head screw M6 x 20, 4x cheese-head screw M6 x 25, 4x heat shrink tube	09 11 000 9964	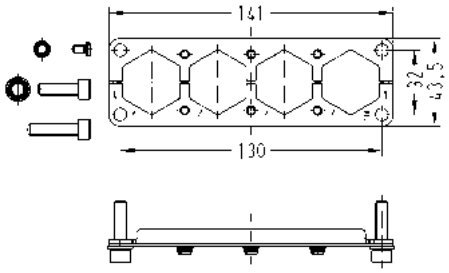 Tightening torque Fixing screws M6: 10 Nm Tightening torque Screws M4: 1.5 Nm
Han® HPR enlarged , Frame, for female inserts, 4x Han® HC Modular 350, Pack contents: 4x M4 screw, 4x washer SK S4, 4x washer SK S6, 4x cheese-head screw M6 x 20, 4x cheese-head screw M6 x 25, 4x heat shrink tube	09 11 000 9965	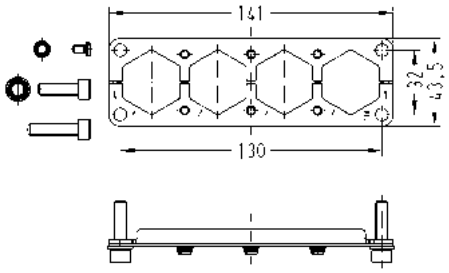 Tightening torque Fixing screws M6: 10 Nm Tightening torque Screws M4: 1.5 Nm
Han® HPR enlarged , Frame, for male inserts, 3x Han® HC Modular 650, Pack contents: 4x M4 screw, 4x washer SK S4, 4x washer SK S6, 4x cheese-head screw M6 x 20, 4x cheese-head screw M6 x 25	09 11 000 9973	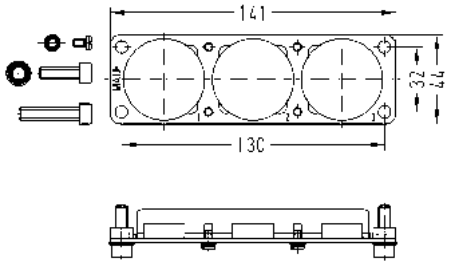 Tightening torque Fixing screws M6: 10 Nm Tightening torque Screws M4: 1.5 Nm

Han® 24 HPR EasyCon - enlarged

Size 24 B

Identification	Part number	Drawing (dimensions in mm)
Han® HPR enlarged , Frame, for female inserts, 3x Han® HC Modular 650, Pack contents: 4x M4 screw, 4x washer SK S4, 4x washer SK S6, 4x cheese-head screw M6 x 20, 4x cheese-head screw M6 x 25 	09 11 000 9974	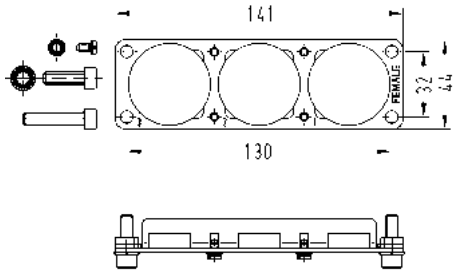 Tightening torque Fixing screws M6: 10 Nm Tightening torque Screws M4: 1.5 Nm
Han® HPR , Frame, for up to 8 single modules, A … H, Pack contents: 2x M4 screw, 2x washer SK S4, 4x cheese-head screw M6 x 20, 4x cheese-head screw M6 x 30, 4x washer SK S6 	09 11 000 9935	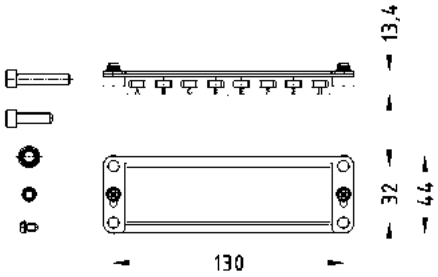 Tightening torque Fixing screws M6: 10 Nm Tightening torque Screws M4: 1.5 Nm
Han® HPR , Frame, for up to 8 single modules, a … h, Pack contents: 2x M4 screw, 2x washer SK S4, 4x cheese-head screw M6 x 20, 4x cheese-head screw M6 x 30, 4x washer SK S6 	09 11 000 9936	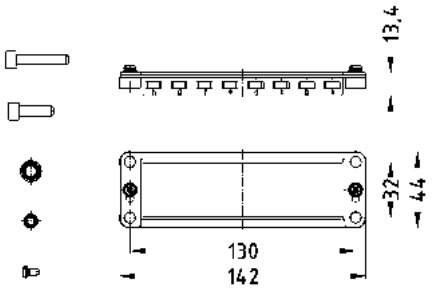 Tightening torque Fixing screws M6: 10 Nm Tightening torque Screws M4: 1.5 Nm

Features

- Secure and a visible connection of screening braid of shielded cables

Technical characteristics

Material (seal)	EPDM
Material (cable glands)	Brass, nickel plated
Material (clamping ring)	Polyamide
RoHS	compliant with exemption, compliant
RoHS exemptions	**6c:** Copper alloy containing up to 4 % lead by weight

Identification	Size	Clamping range (mm)	Part number	Drawing (dimensions in mm)
Han® HPR EasyCon , Cable gland, EMC version, 10 Nm 	M25 M25	9 ... 17 13 ... 21	19 00 000 5013 19 00 000 5019	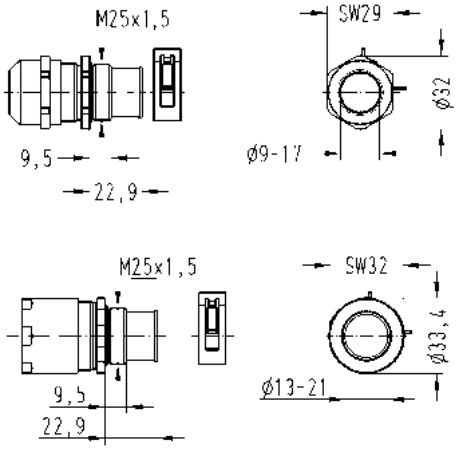
Han® HPR EasyCon , Cable gland, EMC version, 20 Nm 	M32 M32 M32	13 ... 21 16 ... 28 17 ... 22,5	19 00 000 5014 19 00 000 5022 19 00 000 5015	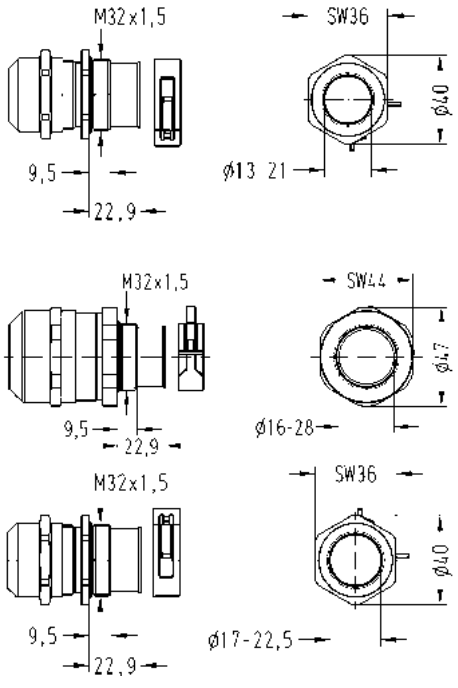

Han® 48 HPR

Features

- Hoods/housings for harsh outdoor environments
- Metal hoods and housings with excellent corrosion resistance
- Corrosion resistance ASTM B117-09 (500 h)
- Excellent EMC characteristics
- Vibration resistant acc. to IEC 61373 category 1B (Category 2 possible with usage of M6 distance bolts)

Technical characteristics

Limiting temperature	-40 ... +125 °C
Tightening torque (screw locking)	4 Nm
Degree of protection acc. to IEC 60529	IP65, IP68, IP69 / IPX9K acc. to ISO 20653
Material (hood/housing)	Aluminium die-cast, Corrosion resistant
Surface (hood/housing)	Powder-coated
Colour (hood/housing)	RAL 9005 (jet black)
Material (seal)	NBR
Material (locking)	Stainless steel
Material (accessories)	Metal
RoHS	compliant

Specifications and approvals

DNV GL

Hoods/housings for harsh outdoor environments
Screw locking

Identification	Cable entry	Part number	Drawing (dimensions in mm)
Han® HPR , Hoods, Top entry 		09 40 048 0451	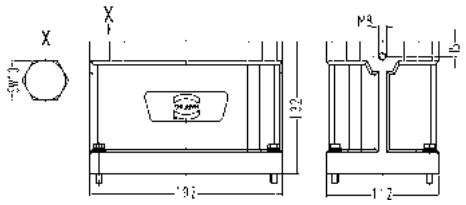
Han® HPR , Bulkhead mounted housings 		09 40 048 0311	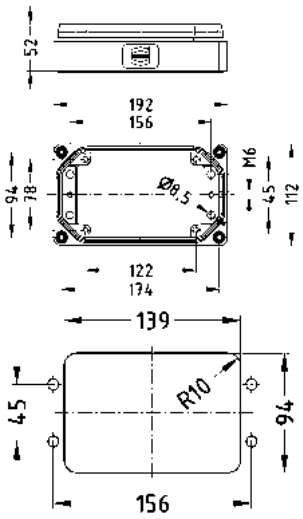 Panel cut out
Han® HPR , Bulkhead mounted housings, for 4 standard inserts - size 16 B 		09 40 048 0331	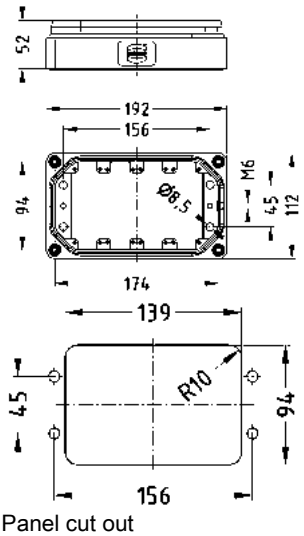 Panel cut out

Identification	Cable entry	Part number	Drawing (dimensions in mm)
Han® HPR , Surface mounted housing, Horizontal version, Top entry 		09 40 048 0951	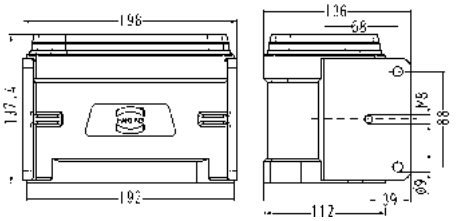
Han® HPR , Protection cover, for bulkhead mounted housings, for surface mounted housings 		09 40 048 5401	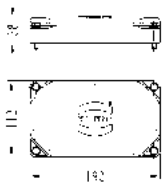
Han® HPR , Mounting cover, Distance bolt M5, Pack contents: 4 distance pieces, 4x M6 screw, 4 washers 		09 40 048 9803	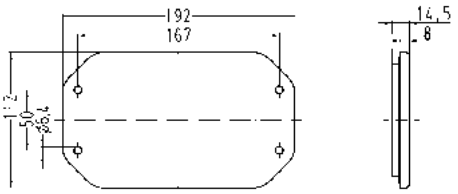 Basic size for above mentioned covers
Han® HPR , Mounting cover, Distance bolt M5, for male inserts, Pack contents: 4 distance pieces, 4x M6 screw, 4 washers 	4x M40	19 40 048 9801	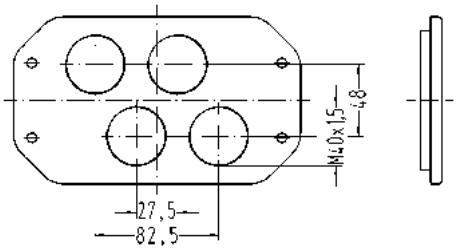
Han® HPR , Mounting cover, Distance bolt M5, for female inserts, Pack contents: 4 distance pieces, 4x M6 screw, 4 washers 	4x M40	19 40 048 9901	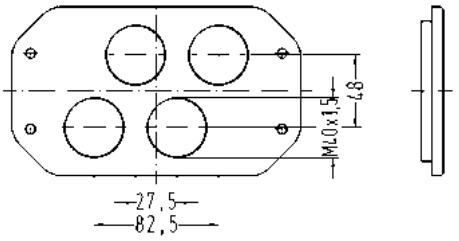
Han® HPR , Mounting cover, Distance bolt M6, Without cable entry, Pack contents: 4 distance pieces, 4x M6 screw, 4 washers		09 40 048 9801	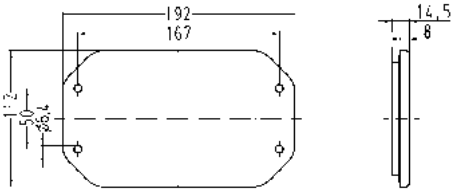

Identification	Cable entry	Part number	Drawing (dimensions in mm)
Han® HPR , Mounting cover, Distance bolt M6, 5 cable entries, Pack contents: 4 distance pieces, 4x M6 screw, 4 washers 	5x M32	19 40 048 9812	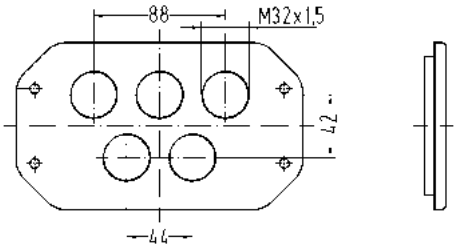
Han® HPR , Mounting cover, Distance bolt M6, 6 cable entries, Pack contents: 4 distance pieces, 4x M6 screw, 4 washers 	6x M25 6x M32	19 40 048 9820 19 40 048 9822	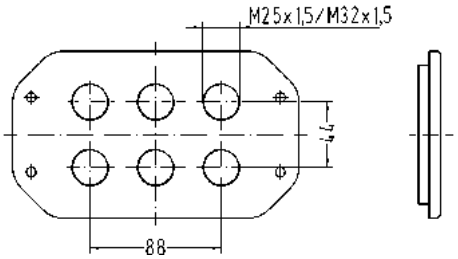 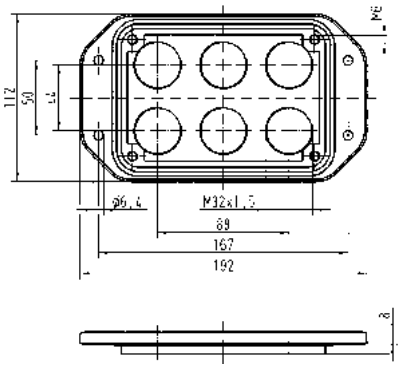
Han® HPR , Mounting cover, Distance bolt M6, 10 cable entries, Pack contents: 4 distance pieces, 4x M6 screw, 4 washers 	10x M25	19 40 048 9860	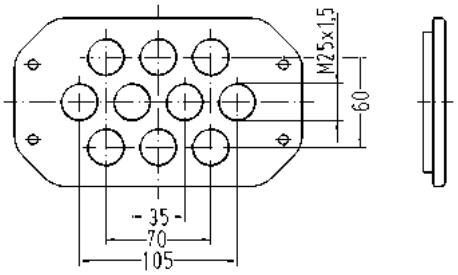

Identification	Cable entry	Part number	Drawing (dimensions in mm)
Mounting frames, Han® HPR 		09 40 000 9965	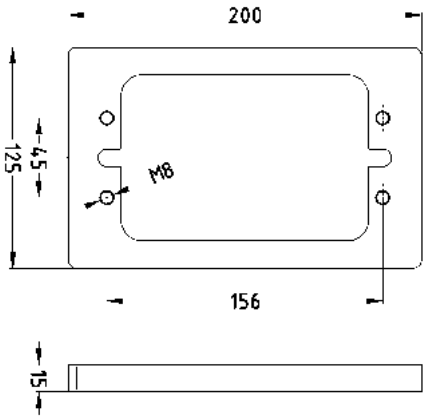

Identification	Part number Male	Part number Female	Drawing (dimensions in mm)
Han® HPR , Frame, for male inserts, 6x Han® HC Modular 350 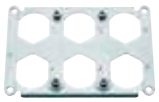	09 40 048 9806		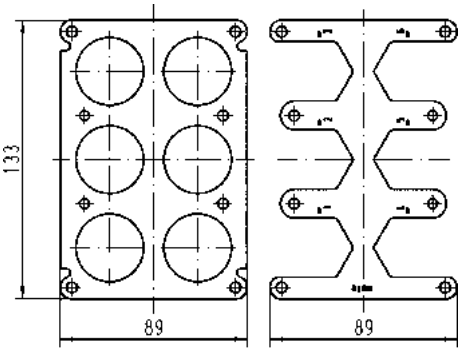
Han® HPR , Frame, for male inserts, 5x Han® HC Modular 350 + 1x Han® HC Modular 350 PE 	09 40 048 9809		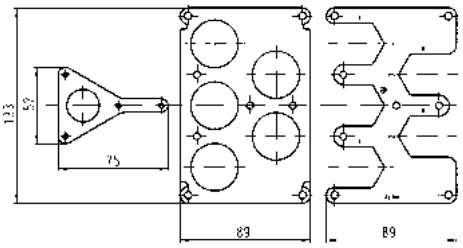
Han® HPR , Frame, for male inserts, 4x HC 350 contacts + 2x Han® Q 5/0 	09 40 048 9810		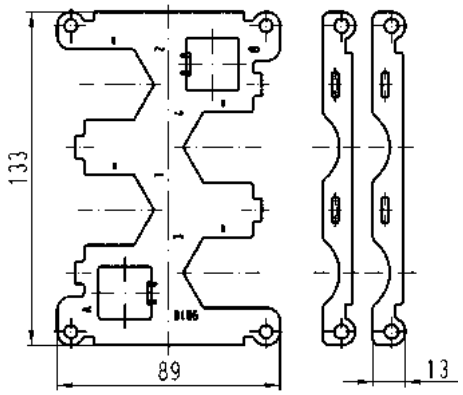
Han® HPR , Frame, for male inserts, 10x Han® HC Modular 350 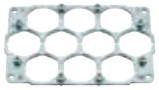	09 40 048 9860		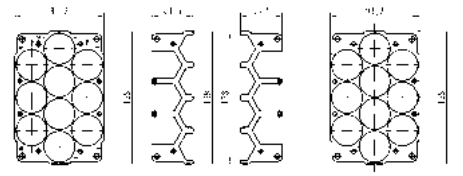

Identification	Part number Male	Part number Female	Drawing (dimensions in mm)
Han® HPR , Frame, for female inserts, 6x Han® HC Modular 350 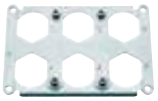		09 40 048 9906	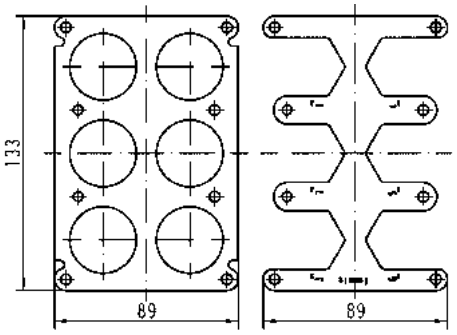
Han® HPR , Frame, for female inserts, 5x Han® HC Modular 350 + 1x Han® HC Modular 350 PE 		09 40 048 9909	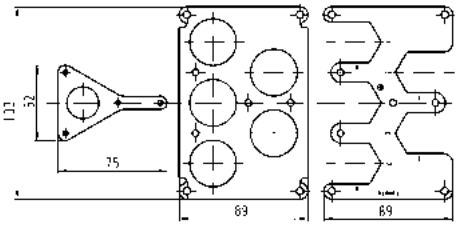
Han® HPR , Frame, for female inserts, 4x HC 350 contacts + 2x Han® Q 5/0 		09 40 048 9910	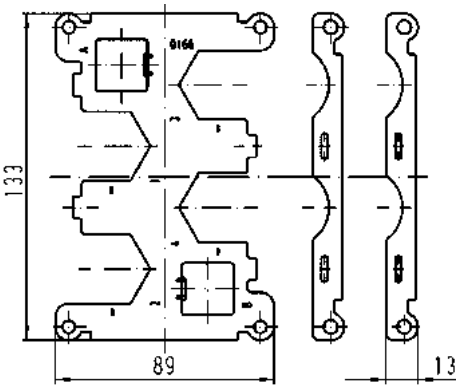
Han® HPR , Frame, for female inserts, 10x Han® HC Modular 350 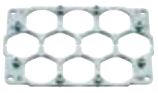		09 40 048 9960	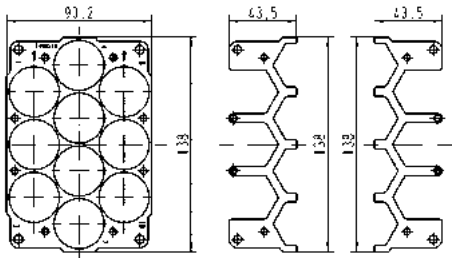

Identification	Part number Male	Part number Female	Drawing (dimensions in mm)
Han® HPR , Frame, for male inserts, 4x HC 650 contacts + 2x Han® Q 5/0 	09 40 048 9811		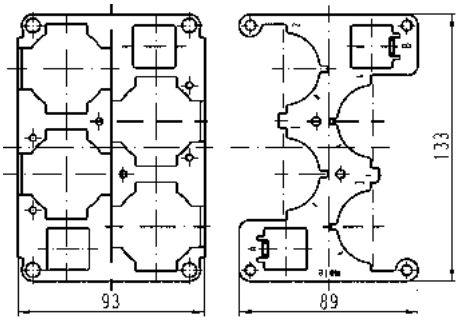
Han® HPR , Frame, for female inserts, 4x HC 650 contacts + 2x Han® Q 5/0 		09 40 048 9911	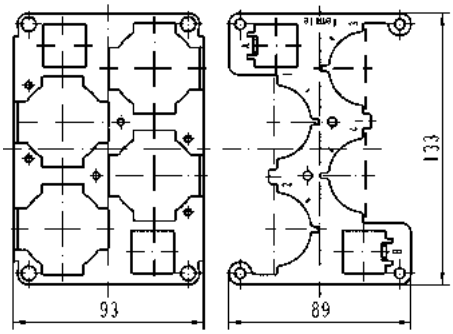
Han® HPR , Frame, for 4 standard inserts - size 16 B  Suitable for hoods and surface mounted housings in conjunction with cover 09 40 048 9803/19 40 048 9801/19 40 048 9901 only	09 40 048 9912	09 40 048 9912	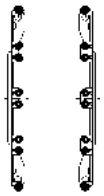

Innovative High Current Connectors for Power Transmission on Trains



Photo courtesy: Stadtwerke München, Munich

The Split hood and housing “open system” of the Han® 24HPR EasyCon with the innovative concept for shielded cables is an excellent solution for the versatile power requirements and the rapid moving operational cycle on Trains.
In use are the approved Han® HC Modular 350A and 650A Crimp-Contacts.

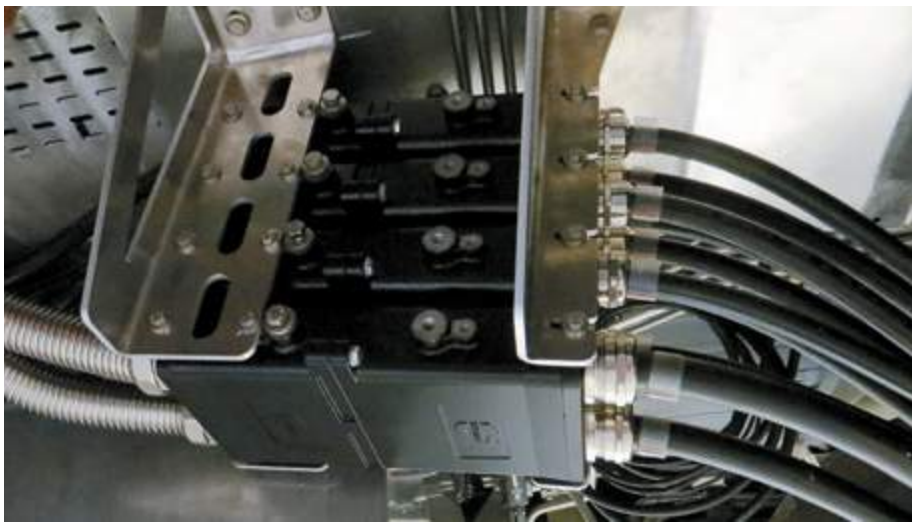

Contents	Page
Han-Power® S with 1x Han® Q 4/2	**15.2**
Han-Power® S with 2x Han® Q 4/2	**15.4**
Han-Power® S with 1x Han® Q 4/2 with maintenance switch	**15.6**
Han-Power® S with 1x Han® Q 4/2 and on/off Switch	**15.8**
Han-Power® S with 1x Han® Q 4/2, metal	**15.10**
Han-Power® S with 1x Han® Q 8/0	**15.12**
Han-Power® S with 2x Han® Q 8/0	**15.14**
Han-Power® T with 3x HARTING PushPull Power	**15.16**
Han-Power® T with 3x Han® Q 2/0	**15.18**
Han-Power® T with 3x Han® Q 4/0	**15.20**
Han-Power® T with 3x Han® Q 5/0	**15.22**
Han-Power® T with 3x Han® Q 7/0	**15.24**
Han-Power® T with 3x Han® Q 4/2	**15.26**
Han-Power® T with 3x Han-Modular® Twin	**15.28**
Accessories	**15.30**

Han-Power® S with 1x Han® Q 4/2

Features

- Compact design saves space
- No interruption of the energy supply
- Leading PE contact within the insert
- Assembly with standard tools
- Black plastic hood, top entry
- Cable to cable housings with male insert and hood with female insert

Technical characteristics

Number of contacts	4
Additional contacts	+ 2 additional signal contacts
Termination method	IDC insulation displacement termination
Electrical data acc. to IEC 61984	40 A 400/690 V 6 kV 3
Rated current	40 A
Rated voltage conductor-earth	400 V
Rated voltage conductor-conductor	690 V
Rated impulse voltage	6 kV
Pollution degree	3
Electrical data, signal	10 A 250 V 4 kV 3
Rated current (signal)	10 A
Rated voltage (signal)	250 V
Rated impulse voltage (signal)	4 kV
Pollution degree (signal)	3
Rated voltage acc. to UL	600 V
Rated voltage acc. to UL (signal)	250 V
Insulation resistance	≥10^{10} Ω
Contact resistance	≤0.3 mΩ
Limiting temperature	-40 ... +125 °C
Mating cycles	≥500
Degree of protection acc. to IEC 60529	IP65
Material (hood/housing)	Polycarbonate
Colour (hood/housing)	RAL 9005 (jet black)
Material (seal)	NBR
Material (locking)	Polyamide
Material (contacts)	Copper alloy
Material flammability class acc. to UL 94	V-0
RoHS	compliant with exemption
RoHS exemptions	**6c:** Copper alloy containing up to 4 % lead by weight

Derating

Current carrying capacity

The current carrying capacity of the connectors is limited by the thermal load capability of the contact element material including the connections and the insulating parts. The derating curve is therefore valid for currents which flow constantly (non-intermittent) through each contact element of the connector evenly, without exceeding the allowed maximum temperature.

Measuring and testing techniques acc. to IEC 60512-5-2

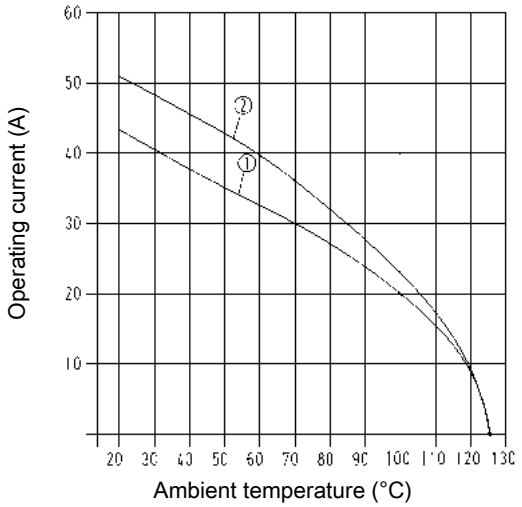

① Han® Q 4/2 Conductor cross-section 4 mm²
② Han® Q 4/2 Conductor cross-section 6 mm²

Specifications and approvals

EN 60664-1
IEC 61984

CE

Details

The Han-Power® S connector is suitable for the assembly of serial power bus.

Having assembled the energy supply Han-Power® S can be inserted at any place of the power cable.The cable jacket has to be removed, the conductor is placed without interruption in the IDC.

Han-Power® S is suitable for cables with single strands manufactured acc. to DIN VDE 0281/ EN 60228. For the distribution of the device Han-Compact® hoods or cable to cable housings are used.

This power supply has to be realized with one Han-Compact® cable to cable hood.

Han-Power® S with 1x Han® Q 4/2

Number of contacts

4+ ⏚

40 A 400/690 V 6 kV 3
+ 2 additional signal contacts
10 A 250 V 4 kV 3

Identification	Conductor cross-section (mm²)	Part number	Drawing (dimensions in mm)
Han-Power® S , Energy distributor, With 1x Han® Q 4/2, Female insert, in Han-Compact® Hoods 	2,5 ... 4 4 ... 6	09 12 008 4804 09 12 008 4806	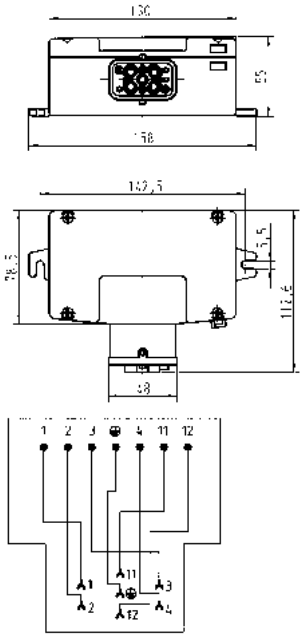 Wiring diagram

Han-Power® S with 2x Han® Q 4/2

Features

- Compact design saves space
- No interruption of the energy supply
- Leading PE contact within the insert
- Assembly with standard tools
- Black plastic hood, top entry
- Cable to cable housings with male insert and hood with female insert

Technical characteristics

Number of contacts	4
Additional contacts	+ 2 additional signal contacts
Termination method	IDC insulation displacement termination
Electrical data acc. to IEC 61984	40 A 400/690 V 6 kV 3
Rated current	40 A
Rated voltage conductor-earth	400 V
Rated voltage conductor-conductor	690 V
Rated impulse voltage	6 kV
Pollution degree	3
Electrical data, signal	10 A 250 V 4 kV 3
Rated current (signal)	10 A
Rated voltage (signal)	250 V
Rated impulse voltage (signal)	4 kV
Pollution degree (signal)	3
Rated voltage acc. to UL	600 V
Rated voltage acc. to UL (signal)	250 V
Insulation resistance	≥10^{10} Ω
Contact resistance	≤0.3 mΩ
Limiting temperature	-40 ... +125 °C
Mating cycles	≥500
Degree of protection acc. to IEC 60529	IP65
Material (hood/housing)	Polycarbonate
Colour (hood/housing)	RAL 9005 (jet black)
Material (seal)	NBR
Material (locking)	Polyamide
Material (contacts)	Copper alloy
Material flammability class acc. to UL 94	V-0
RoHS	compliant with exemption
RoHS exemptions	**6c:** Copper alloy containing up to 4 % lead by weight

Derating

Current carrying capacity

The current carrying capacity of the connectors is limited by the thermal load capability of the contact element material including the connections and the insulating parts. The derating curve is therefore valid for currents which flow constantly (non-intermittent) through each contact element of the connector evenly, without exceeding the allowed maximum temperature.

Measuring and testing techniques acc. to IEC 60512-5-2

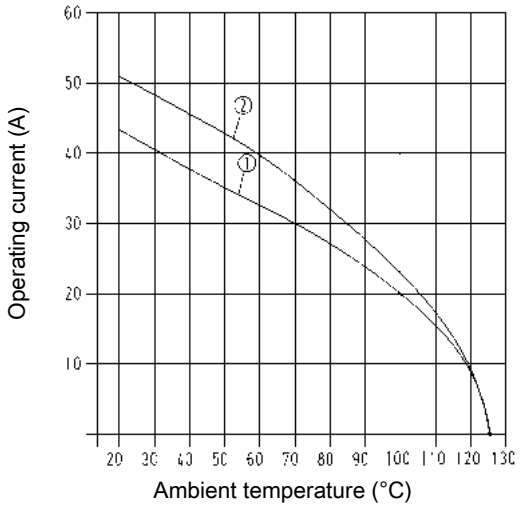

① Han® Q 4/2 Conductor cross-section 4 mm²
② Han® Q 4/2 Conductor cross-section 6 mm²

Specifications and approvals

EN 60664-1
IEC 61984

CE

Details

The Han-Power® S connector is suitable for the assembly of serial power bus.

Having assembled the energy supply Han-Power® S can be inserted at any place of the power cable.The cable jacket has to be removed, the conductor is placed without interruption in the IDC.

Han-Power® S is suitable for cables with single strands manufactured acc. to DIN VDE 0281/ EN 60228. For the distribution of the device Han-Compact® hoods or cable to cable housings are used.

This power supply has to be realized with one Han-Compact® cable to cable hood.

Han-Power® S with 2x Han® Q 4/2

Number of contacts

4+ ⏚

40 A 400/690 V 6 kV 3
+ 2 additional signal contacts
10 A 250 V 4 kV 3

Identification	Conductor cross-section (mm²)	Part number	Drawing (dimensions in mm)
Han-Power® S , Energy distributor, With 2x Han® Q 4/2, Female insert, in Han-Compact® Housings, bulkhead mounting 	4 ... 6	09 12 008 4807	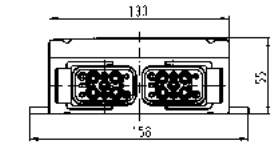 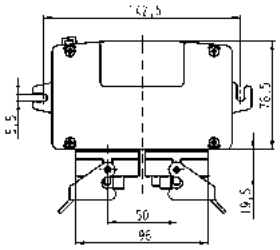 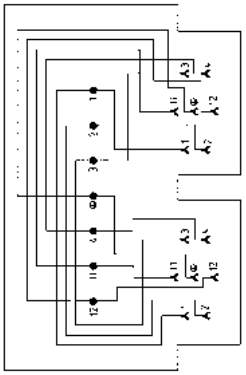 Wiring diagram

Han-Power® S with 1x Han® Q 4/2 with maintenance switch

Features

- Compact design saves space
- No interruption of the energy supply
- Leading PE contact within the insert
- Assembly with standard tools

Technical characteristics

Number of contacts	4
Additional contacts	+ 2 additional signal contacts
Termination method	IDC insulation displacement termination
Electrical data acc. to IEC 61984	5 A 230/400 V 4 kV 2
Rated current	5 A
Rated voltage conductor-earth	230 V
Rated voltage conductor-conductor	400 V
Rated impulse voltage	4 kV
Pollution degree	2
Electrical data, signal	10 A 250 V 4 kV 2
Rated current (signal)	10 A
Rated voltage (signal)	250 V
Rated impulse voltage (signal)	4 kV
Pollution degree (signal)	2
Rated voltage acc. to UL	600 V
Rated voltage acc. to CSA	250 V
Insulation resistance	≥10^{10} Ω
Limiting temperature	-25 ... +55 °C
Mating cycles	≥500
Degree of protection acc. to IEC 60529	IP65
Material (hood/housing)	Polycarbonate
Colour (hood/housing)	RAL 9005 (jet black)
Material (seal)	NBR
Material (contacts)	Copper alloy
Material flammability class acc. to UL 94	V-0
RoHS	compliant with exemption
RoHS exemptions	**6c:** Copper alloy containing up to 4 % lead by weight

Derating

Current carrying capacity

The current carrying capacity of the connectors is limited by the thermal load capability of the contact element material including the connections and the insulating parts. The derating curve is therefore valid for currents which flow constantly (non-intermittent) through each contact element of the connector evenly, without exceeding the allowed maximum temperature.

Measuring and testing techniques acc. to IEC 60512-5-2

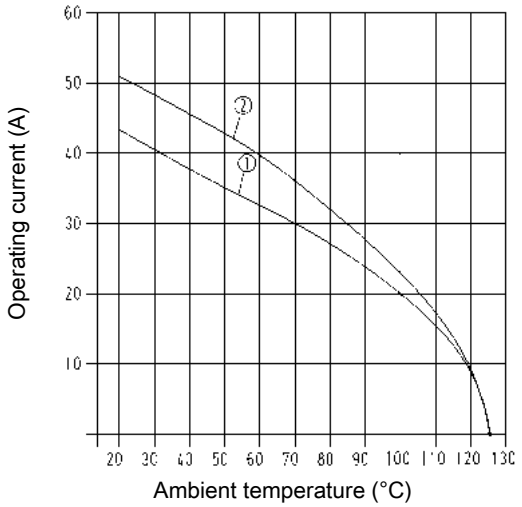

① Han® Q 4/2 Conductor cross-section 4 mm²
② Han® Q 4/2 Conductor cross-section 6 mm²

Specifications and approvals

EN 60664-1
IEC 61984

CE

Details

The Han-Power® S connector is suitable for the assembly of serial power bus.

Having assembled the energy supply Han-Power® S can be inserted at any place of the power cable.The cable jacket has to be removed, the conductor is placed without interruption in the IDC.

Han-Power® S is suitable for cables with single strands manufactured acc. to DIN VDE 0281/ EN 60228. For the distribution of the device Han-Compact® hoods or cable to cable housings are used.

This power supply has to be realized with one Han-Compact® cable to cable hood.

Technical data of switches

Electrical data acc. to IEC 61058-1 (VDE 0630 sect. 1)

for switch-disconnectors

Rated voltage 250 V~ / 400 V~

Rated current 16 (10) A / 10 (5) A

Han-Power® S with 1x Han® Q 4/2 with maintenance switch

Number of contacts

4+ ⏚

5 A 230/400 V 4 kV 2
+ 2 additional signal contacts
10 A 250 V 4 kV 2

Identification	Conductor cross-section (mm²)	Part number	Drawing (dimensions in mm)
Han-Power® S , Energy distributor, With 1x Han® Q 4/2, Female insert, in Han-Compact® Hoods, With maintenance switch 	4 ... 6	09 12 008 4620	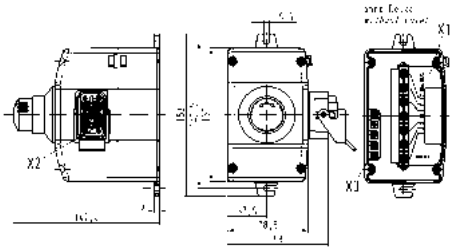 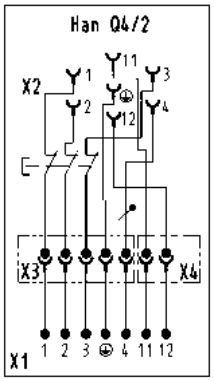 Wiring diagram

Han-Power® S with 1x Han® Q 4/2 and on/off Switch

Features

- Compact design saves space
- No interruption of the energy supply
- Leading PE contact within the insert
- Assembly with standard tools

Technical characteristics

Number of contacts	4
Termination method	IDC insulation displacement termination
Electrical data acc. to IEC 61984	10 A 230/400 V 4 kV 3
Rated current	10 A
Rated voltage conductor-earth	230 V
Rated voltage conductor-conductor	400 V
Rated impulse voltage	4 kV
Pollution degree	3
Insulation resistance	≥10^{10} Ω
Limiting temperature	-40 ... +125 °C
Mating cycles	≥500
Degree of protection acc. to IEC 60529	IP65
Material (hood/housing)	Polycarbonate
Colour (hood/housing)	RAL 9005 (jet black)
Material (seal)	NBR
Material (contacts)	Copper alloy
Material flammability class acc. to UL 94	V-0

Derating

Current carrying capacity

The current carrying capacity of the connectors is limited by the thermal load capability of the contact element material including the connections and the insulating parts. The derating curve is therefore valid for currents which flow constantly (non-intermittent) through each contact element of the connector evenly, without exceeding the allowed maximum temperature.

Measuring and testing techniques acc. to IEC 60512-5-2

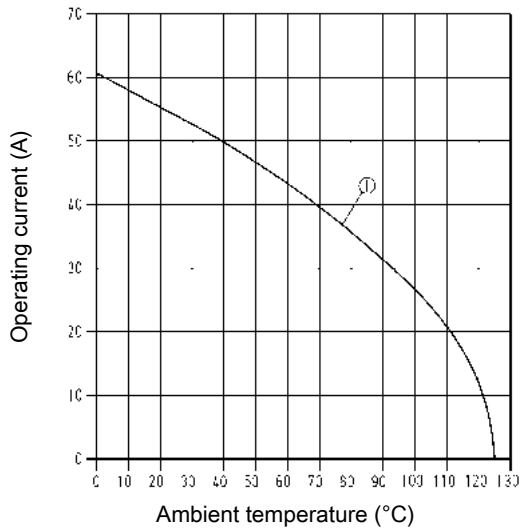

Energy supply Conductor cross-section 10 mm²

Specifications and approvals

EN 60664-1
IEC 61984

CE

Details

The Han-Power® S connector is suitable for the assembly of serial power bus.

Having assembled the energy supply Han-Power® S can be inserted at any place of the power cable.The cable jacket has to be removed, the conductor is placed without interruption in the IDC.

Han-Power® S is suitable for cables with single strands manufactured acc. to DIN VDE 0281/ EN 60228. For the distribution of the device Han-Compact® hoods or cable to cable housings are used.

This power supply has to be realized with one Han-Compact® cable to cable hood.

Power side

Electrical data acc. to EN 61984

Interface to connector

10 A 230/400 V 4 kV 3

Frequency 50 Hz

Energy bus

50 A 230/400 V 4 kV 3

Max. operating temperature -5°C … 60°C

Degree of protection

acc. to DIN EN 60529 IP65

Mechanical working life ≥ 500 mating cycles

Security fixing

nach IEC 60127-1;

nach UL 4248-1 / UL 512

nach CSA C22.2 no. 39

Rated current 10 A

Rated voltage 250 V

Technical data of switches

Electrical data acc. to IEC 60947

16 A 750 V 0.5 kA

Rated current 16 A

Rated voltage 750 V

Rated short-circuit current 0.5 kA

Mechanical working life 10 000 operations

Han-Power® S with 1x Han® Q 4/2 and on/off Switch

Number of contacts

4+ ⏚

10 A 230/400 V 4 kV 3

Identification	Conductor cross-section (mm²)	Part number	Drawing (dimensions in mm)
Han-Power® S , Energy distributor, With 1x Han® Q 4/2, Female insert, in Han-Compact® Hoods, On/off Switch 	10	09 12 008 4650	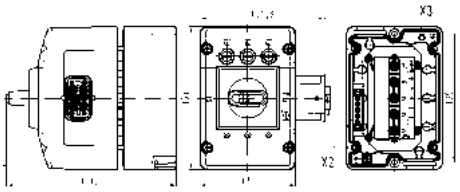 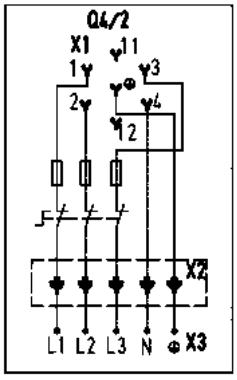 Wiring diagram

Han-Power® S with 1x Han® Q 4/2, metal

Features

- Compact design saves space
- No interruption of the energy supply
- Leading PE contact within the insert
- Assembly with standard tools

Technical characteristics

Number of contacts	4
Additional contacts	+ 2 additional signal contacts
Termination method	IDC insulation displacement termination
Electrical data acc. to IEC 61984	40 A 400/690 V 6 kV 3
Rated current	40 A
Rated voltage conductor-earth	400 V
Rated voltage conductor-conductor	690 V
Rated impulse voltage	6 kV
Pollution degree	3
Electrical data, signal	10 A 250 V 4 kV 3
Rated current (signal)	10 A
Rated voltage (signal)	250 V
Rated impulse voltage (signal)	4 kV
Pollution degree (signal)	3
Rated voltage acc. to UL	600 V
Rated voltage acc. to UL (signal)	250 V
Rated voltage acc. to CSA	250 V
Insulation resistance	≥10^{10} Ω
Contact resistance	≤0.3 mΩ
Limiting temperature	-40 ... +125 °C
Mating cycles	≥500
Degree of protection acc. to IEC 60529	IP65
Material (hood/housing)	Aluminium die-cast
Surface (hood/housing)	Powder-coated
Colour (hood/housing)	RAL 9005 (jet black)
Material (seal)	NBR
Material (contacts)	Copper alloy
Material flammability class acc. to UL 94	V-0
RoHS	compliant with exemption
RoHS exemptions	**6c:** Copper alloy containing up to 4 % lead by weight

Derating

Current carrying capacity

The current carrying capacity of the connectors is limited by the thermal load capability of the contact element material including the connections and the insulating parts. The derating curve is therefore valid for currents which flow constantly (non-intermittent) through each contact element of the connector evenly, without exceeding the allowed maximum temperature.

Measuring and testing techniques acc. to IEC 60512-5-2

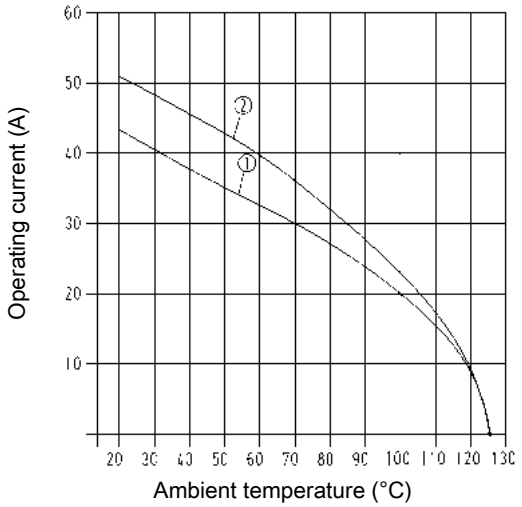

① Han® Q 4/2 Conductor cross-section 4 mm²
② Han® Q 4/2 Conductor cross-section 6 mm²

Specifications and approvals

EN 60664-1
IEC 61984

CE

Details

The Han-Power® S connector is suitable for the assembly of serial power bus.

Having assembled the energy supply Han-Power® S can be inserted at any place of the power cable.The cable jacket has to be removed, the conductor is placed without interruption in the IDC.

Han-Power® S is suitable for cables with single strands manufactured acc. to DIN VDE 0281/ EN 60228. For the distribution of the device Han-Compact® hoods or cable to cable housings are used.

This power supply has to be realized with one Han-Compact® cable to cable hood.

Han-Power® S with 1x Han® Q 4/2, metal

Number of contacts

4+ ⏚

40 A 400/690 V 6 kV 3
+ 2 additional signal contacts
10 A 250 V 4 kV 3

Identification	Conductor cross-section (mm²)	Part number	Drawing (dimensions in mm)
Han-Power® S , Energy distributor, With 1x Han® Q 4/2, Female insert, in Han-Compact® Housings, bulkhead mounting 	4 ... 6	09 12 008 4901	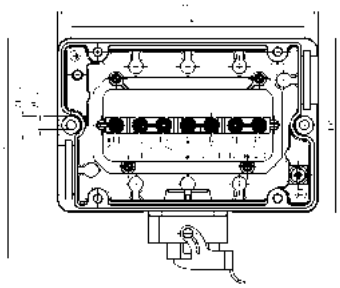 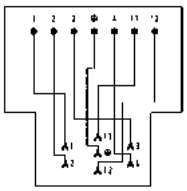 Wiring diagram
Han-Power® S , Energy distributor, With 1x Han® Q 4/2, Female insert, in Han-Compact® Housings, bulkhead mounting, Without signal contacts 	10	09 12 008 4951	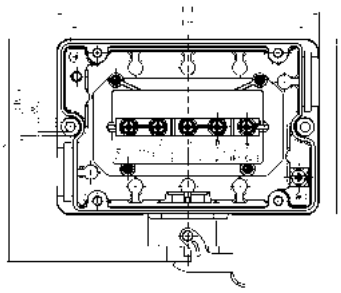 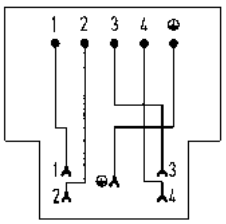 Wiring diagram

Han-Power® S with 1x Han® Q 8/0

Features

- Compact design saves space
- No interruption of the energy supply
- Leading PE contact within the insert
- Assembly with standard tools
- Black plastic hood, top entry

Technical characteristics

Number of contacts	8
Termination method	IDC insulation displacement termination
Electrical data acc. to IEC 61984	25 A 500 V 6 kV 3
Rated current	25 A
Rated voltage	500 V
Rated impulse voltage	6 kV
Pollution degree	3
Rated voltage acc. to UL	600 V
Rated voltage acc. to CSA	600 V
Insulation resistance	≥10^{10} Ω
Contact resistance	≤1 mΩ
Limiting temperature	-40 ... +125 °C
Mating cycles	≥500
Degree of protection acc. to IEC 60529	IP65
Material (hood/housing)	Polycarbonate
Colour (hood/housing)	RAL 9005 (jet black)
Material (seal)	NBR
Material (locking)	Polyamide, Fibre-glass reinforced
Material (contacts)	Copper alloy
Material flammability class acc. to UL 94	V-0
RoHS	compliant with exemption
RoHS exemptions	**6c:** Copper alloy containing up to 4 % lead by weight

Derating

Current carrying capacity

The current carrying capacity of the connectors is limited by the thermal load capability of the contact element material including the connections and the insulating parts. The derating curve is therefore valid for currents which flow constantly (non-intermittent) through each contact element of the connector evenly, without exceeding the allowed maximum temperature.

Measuring and testing techniques acc. to IEC 60512-5-2

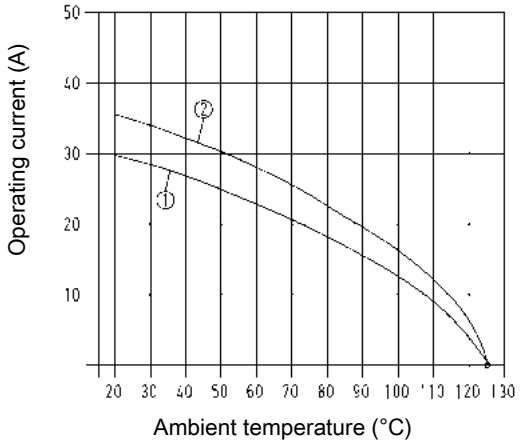

① Han® Q 8/0 Conductor cross-section 2.5 mm²
② Han® Q 8/0 Conductor cross-section 4 mm²
③ Han® Q 8/0 Conductor cross-section 6 mm²

Specifications and approvals

EN 60664-1
IEC 61984

CE

Details

The Han-Power® S connector is suitable for the assembly of serial power bus.

Having assembled the energy supply Han-Power® S can be inserted at any place of the power cable.The cable jacket has to be removed, the conductor is placed without interruption in the IDC.

Han-Power® S is suitable for cables with single strands manufactured acc. to DIN VDE 0281/ EN 60228. For the distribution of the device Han-Compact® hoods or cable to cable housings are used.

This power supply has to be realized with one Han-Compact® cable to cable hood.

Han-Power® S with 1x Han® Q 8/0

Number of contacts

8+ ⏚

25 A 500 V 6 kV 3

Identification	Conductor cross-section (mm²)	Part number	Drawing (dimensions in mm)
Han-Power® S , Energy distributor, With 1x Han® Q 8/0, Female insert, in Han-Compact® Hoods 	2,5 ... 4 4 ... 6	09 12 008 4801 09 12 008 4811	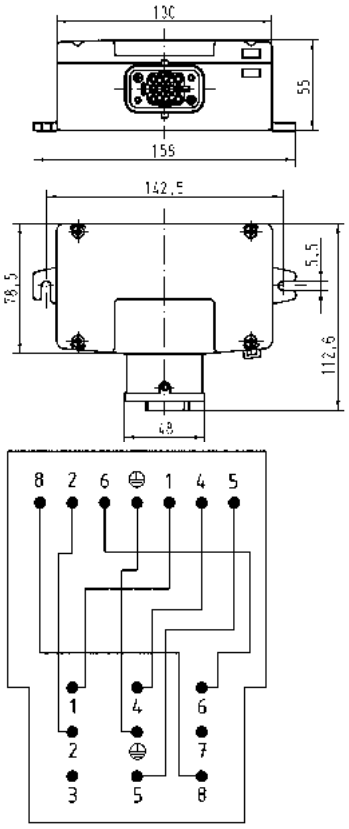 Wiring diagram

Han-Power® S with 2x Han® Q 8/0

Features

- Compact design saves space
- No interruption of the energy supply
- Leading PE contact within the insert
- Assembly with standard tools
- Black plastic hood, top entry

Technical characteristics

Number of contacts	6
Termination method	IDC insulation displacement termination
Electrical data acc. to IEC 61984	25 A 500 V 6 kV 3
Rated current	25 A
Rated voltage	500 V
Rated impulse voltage	6 kV
Pollution degree	3
Rated voltage acc. to UL	600 V
Insulation resistance	≥10^{10} Ω
Contact resistance	≤1 mΩ
Limiting temperature	-40 ... +125 °C
Mating cycles	≥500
Degree of protection acc. to IEC 60529	IP65
Material (hood/housing)	Polycarbonate
Colour (hood/housing)	RAL 9005 (jet black)
Material (seal)	NBR
Material (locking)	Polyamide
Material (contacts)	Copper alloy
Material flammability class acc. to UL 94	V-0
RoHS	compliant with exemption
RoHS exemptions	**6c:** Copper alloy containing up to 4 % lead by weight

Derating

Current carrying capacity

The current carrying capacity of the connectors is limited by the thermal load capability of the contact element material including the connections and the insulating parts. The derating curve is therefore valid for currents which flow constantly (non-intermittent) through each contact element of the connector evenly, without exceeding the allowed maximum temperature.

Measuring and testing techniques acc. to IEC 60512-5-2

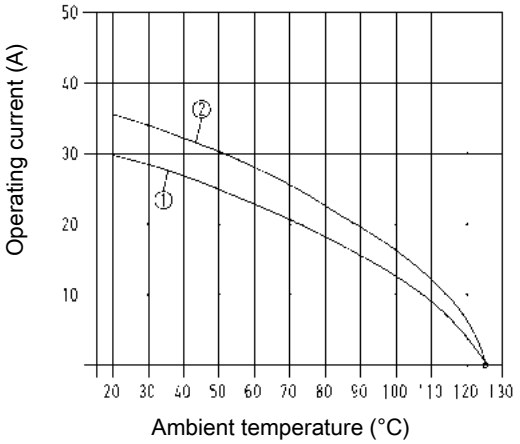

① Han® Q 8/0 Conductor cross-section 2.5 mm²
② Han® Q 8/0 Conductor cross-section 4 mm²

Specifications and approvals

EN 60664-1
IEC 61984

CE

Details

The Han-Power® S connector is suitable for the assembly of serial power bus.

Having assembled the energy supply Han-Power® S can be inserted at any place of the power cable.The cable jacket has to be removed, the conductor is placed without interruption in the IDC.

Han-Power® S is suitable for cables with single strands manufactured acc. to DIN VDE 0281/ EN 60228. For the distribution of the device Han-Compact® hoods or cable to cable housings are used.

This power supply has to be realized with one Han-Compact® cable to cable hood.

Han-Power® S with 2x Han® Q 8/0

Number of contacts

6+ ⏚

25 A 500 V 6 kV 3

Identification	Conductor cross-section (mm²)	Part number	Drawing (dimensions in mm)
Han-Power® S , Energy distributor, With 2x Han® Q 8/0, Female insert, in Han-Compact® Housings, bulkhead mounting 	2,5 ... 4	09 12 008 4802	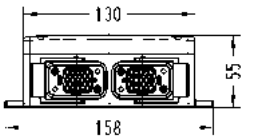 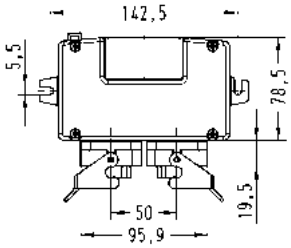 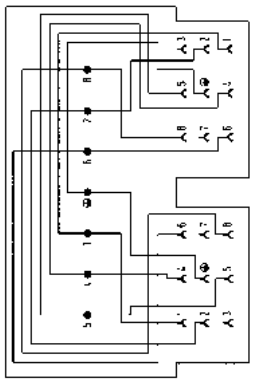 Wiring diagram

Technical characteristics

Number of contacts	4
Electrical data acc. to IEC 61984	12 A 48 V 1,5 kV 3
Rated current	12 A
Rated voltage	48 V
Rated impulse voltage	1.5 kV
Pollution degree	3
Insulation resistance	≥10^{10} Ω
Mating cycles	≥750
Degree of protection acc. to IEC 60529	IP65, IP67
Material (hood/housing)	Polyamide
Colour (hood/housing)	RAL 9005 (jet black)
Material flammability class acc. to UL 94	V-0

Derating

Current carrying capacity

The current carrying capacity of the connectors is limited by the thermal load capability of the contact element material including the connections and the insulating parts. The derating curve is therefore valid for currents which flow constantly (non-intermittent) through each contact element of the connector evenly, without exceeding the allowed maximum temperature.

Measuring and testing techniques acc. to IEC 60512-5-2

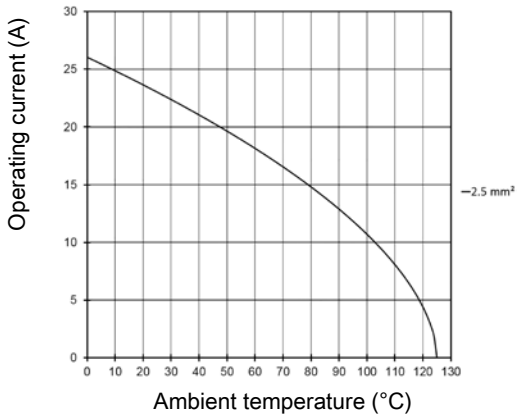

Specifications and approvals

EN 60664-1
IEC 61984

CE

Han-Power® T with 3x HARTING PushPull Power

Number of contacts

4

12 A 48 V 1,5 kV 3

Identification	Part number	Drawing (dimensions in mm)
Han-Power® T , Energy distributor, With 3x HARTING PushPull Power, Bulkhead mounted housings 	09 12 008 4770	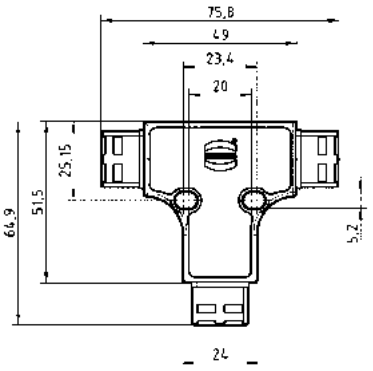

Han-Power® T with 3x Han® Q 2/0

Features

- One connection for the power input, the power output and to connect with the device
- 2 power contacts
- Plastic housings are integrated in the moulding

Technical characteristics

Number of contacts	2
Electrical data acc. to IEC 61984	40 A 400 V 6 kV 3
Rated current	40 A
Rated voltage	400 V
Rated impulse voltage	6 kV
Pollution degree	3
Rated voltage acc. to UL	600 V
Rated voltage acc. to CSA	600 V
Insulation resistance	≥10^{10} Ω
Contact resistance	≤1 mΩ
Mating cycles	≥500
Material (hood/housing)	Polyamide
Colour (hood/housing)	RAL 9005 (jet black)
Material (seal)	NBR
Material (locking)	Polyamide
Material (contacts)	Copper alloy
Material flammability class acc. to UL 94	V-0
RoHS	compliant with exemption
RoHS exemptions	**6c:** Copper alloy containing up to 4 % lead by weight

Derating

Current carrying capacity

The current carrying capacity of the connectors is limited by the thermal load capability of the contact element material including the connections and the insulating parts. The derating curve is therefore valid for currents which flow constantly (non-intermittent) through each contact element of the connector evenly, without exceeding the allowed maximum temperature.

Measuring and testing techniques acc. to IEC 60512-5-2

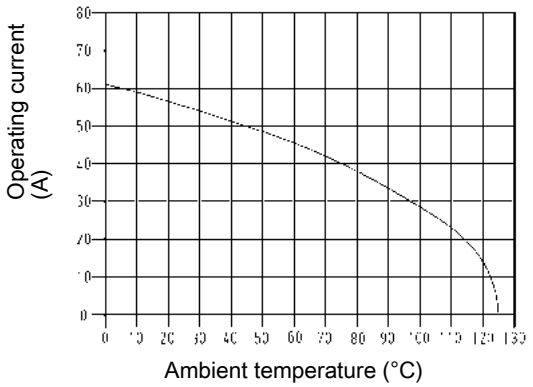

Conductor cross-section 6 mm²

Specifications and approvals

EN 60664-1
IEC 61984
UL 2237 PVVA.E318390
CSA-C22.2 No. 182.3 PVVA7.E318390

CE

Han-Power® T with 3x Han® Q 2/0

Number of contacts

2+ ⏚

40 A 400 V 6 kV 3

Identification	Part number	Drawing (dimensions in mm)
Han-Power® T , Energy distributor, With 3x Han® Q 2/0, In Han® 3 A Housings, bulkhead mounting 	09 12 008 4752	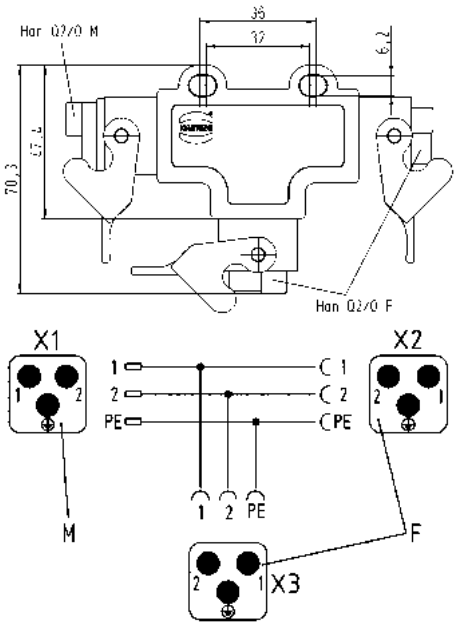 Wiring diagram

Technical characteristics

Number of contacts	4
Electrical data acc. to IEC 61984	40 A 830 V 8 kV 3
Rated current	40 A
Rated voltage	830 V
Rated impulse voltage	8 kV
Pollution degree	3
Insulation resistance	≥10^{10} Ω
Contact resistance	≤1 mΩ
Mating cycles	≥500
Material (hood/housing)	Polyamide
Colour (hood/housing)	RAL 9005 (jet black)
Material (seal)	NBR
Material (locking)	Polyamide
Material (contacts)	Copper alloy
Material flammability class acc. to UL 94	V-0
RoHS	compliant with exemption
RoHS exemptions	**6c:** Copper alloy containing up to 4 % lead by weight

Derating

Current carrying capacity

The current carrying capacity of the connectors is limited by the thermal load capability of the contact element material including the connections and the insulating parts. The derating curve is therefore valid for currents which flow constantly (non-intermittent) through each contact element of the connector evenly, without exceeding the allowed maximum temperature.

Measuring and testing techniques acc. to IEC 60512-5-2

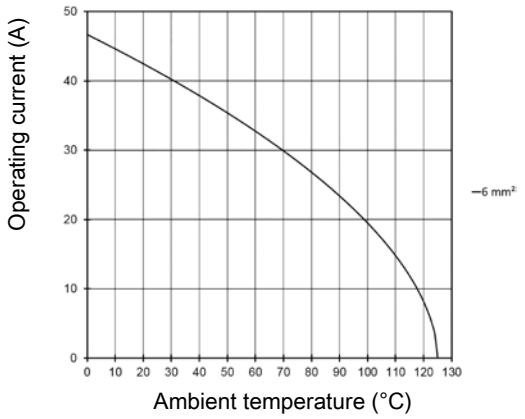

Specifications and approvals

EN 60664-1
IEC 61984

CE

Han-Power® T with 3x Han® Q 4/0

Number of contacts

4+ ⏚

40 A 830 V 8 kV 3

Identification	Part number	Drawing (dimensions in mm)
Han-Power® T , Energy distributor, With 3x Han® Q 4/0, In Han® 3 A Housings, bulkhead mounting 	09 12 008 4756	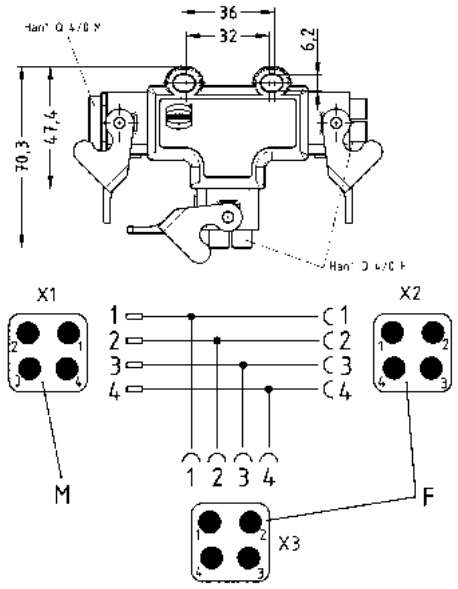 Wiring diagram

Features

- One connection for the power input, the power output and to connect with the device
- Plastic housings are integrated in the moulding

Technical characteristics

Number of contacts	5, 4
Electrical data acc. to IEC 61984	16 A 230/400 V 4 kV 3
Rated current	16 A
Rated voltage conductor-earth	230 V
Rated voltage conductor-conductor	400 V
Rated impulse voltage	4 kV
Pollution degree	3
Rated voltage acc. to UL	600 V
Insulation resistance	≥10^{10} Ω
Contact resistance	≤1 mΩ
Mating cycles	≥500
Material (hood/housing)	Polyamide
Colour (hood/housing)	RAL 9005 (jet black)
Material (seal)	NBR
Material (locking)	Polyamide
Material (contacts)	Copper alloy
Material flammability class acc. to UL 94	V-0
RoHS	compliant with exemption
RoHS exemptions	**6c:** Copper alloy containing up to 4 % lead by weight

Derating

Current carrying capacity

The current carrying capacity of the connectors is limited by the thermal load capability of the contact element material including the connections and the insulating parts. The derating curve is therefore valid for currents which flow constantly (non-intermittent) through each contact element of the connector evenly, without exceeding the allowed maximum temperature.

Measuring and testing techniques acc. to IEC 60512-5-2

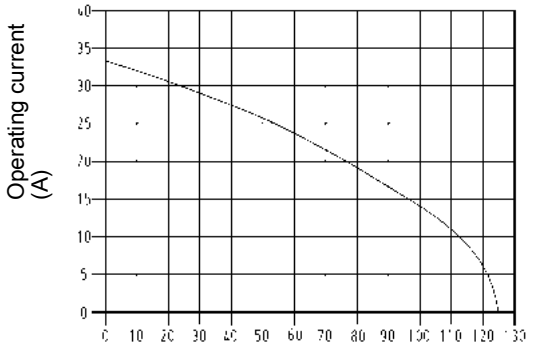

Conductor cross-section 2.5 mm²

Specifications and approvals

EN 60664-1
IEC 61984
UL 2237 PVVA.E318390
CSA-C22.2 No. 182.3 PVVA7.E318390

CE

Han-Power® T with 3x Han® Q 5/0

Number of contacts

5+ ⏚

16 A 230/400 V 4 kV 3

Identification	Part number	Drawing (dimensions in mm)
Han-Power® T , Energy distributor, With 3x Han® Q 5/0, In Han® 3 A Housings, bulkhead mounting, 5-pin 	09 12 008 4753	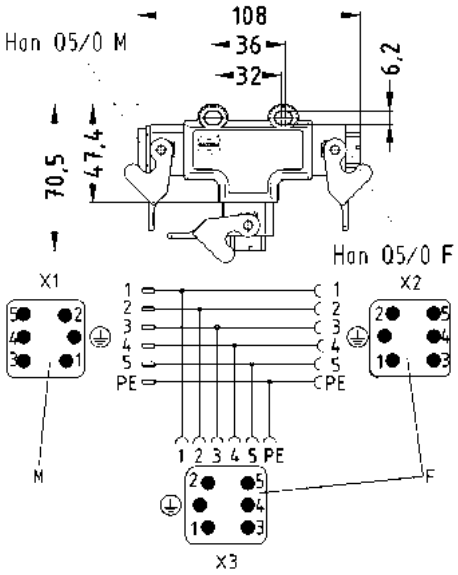 Wiring diagram
Han-Power® T , Energy distributor, With 3x Han® Q 5/0, In Han® 3 A Housings, bulkhead mounting, 4-pin 	09 12 008 4751	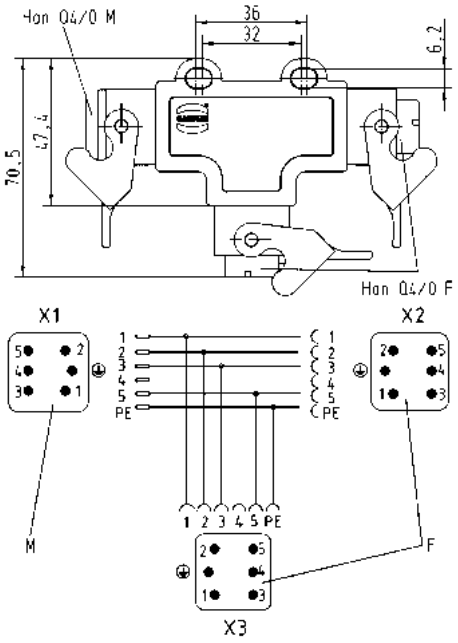 Wiring diagram

Technical characteristics

Number of contacts	7
Electrical data acc. to IEC 61984	10 A 400 V 6 kV 3
Rated current	10 A
Rated voltage	400 V
Rated impulse voltage	6 kV
Pollution degree	3
Insulation resistance	≥10^{10} Ω
Contact resistance	≤1 mΩ
Mating cycles	≥500
Material (hood/housing)	Polyamide
Colour (hood/housing)	RAL 9005 (jet black)
Material (seal)	NBR
Material (locking)	Polyamide
Material (contacts)	Copper alloy
RoHS	compliant with exemption
RoHS exemptions	**6c:** Copper alloy containing up to 4 % lead by weight

Derating

Current carrying capacity

The current carrying capacity of the connectors is limited by the thermal load capability of the contact element material including the connections and the insulating parts. The derating curve is therefore valid for currents which flow constantly (non-intermittent) through each contact element of the connector evenly, without exceeding the allowed maximum temperature.

Measuring and testing techniques acc. to IEC 60512-5-2

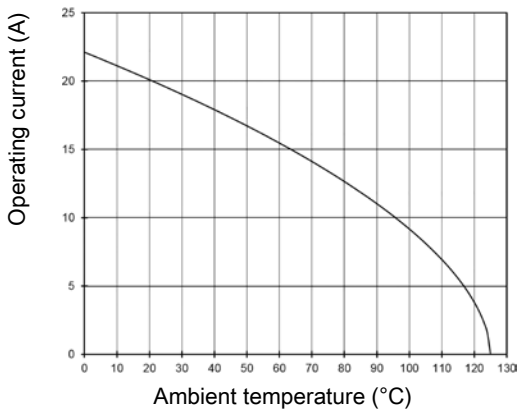

Conductor cross-section 2.5 mm²

Specifications and approvals

EN 60664-1
IEC 61984

CE

Han-Power® T with 3x Han® Q 7/0

Number of contacts

7+ ⏚

10 A 400 V 6 kV 3

Identification	Part number	Drawing (dimensions in mm)
Han-Power® T , Energy distributor, With 3x Han® Q 7/0, In Han® 3 A Housings, bulkhead mounting 	09 12 008 4757	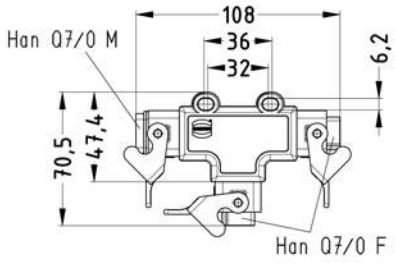 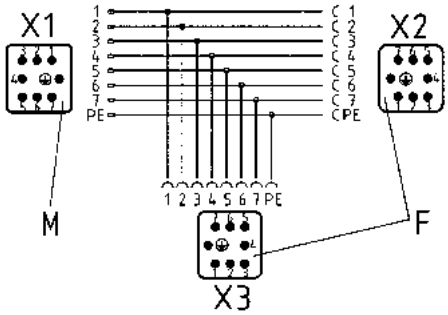 Wiring diagram

Features

- One connection for the power input, the power output and to connect with the device
- Finger safe male and female contacts
- 4 power contacts
- 2 signal contacts
- Metal hoods / housings

Technical characteristics

Number of contacts	4
Additional contacts	+ 2 additional signal contacts
Electrical data acc. to IEC 61984	40 A 400/690 V 6 kV 3
Rated current	40 A
Rated voltage conductor-earth	400 V
Rated voltage conductor-conductor	690 V
Rated impulse voltage	6 kV
Pollution degree	3
Electrical data, signal	10 A 250 V 4 kV 3
Rated current (signal)	10 A
Rated voltage (signal)	250 V
Rated impulse voltage (signal)	4 kV
Pollution degree (signal)	3
Rated voltage acc. to UL	600 V
Rated voltage acc. to UL (signal)	250 V
Rated voltage acc. to CSA	250 V
Insulation resistance	≥10^{10} Ω
Contact resistance	≤0.3 mΩ
Mating cycles	≥500
Material (hood/housing)	Zinc die-cast
Surface (hood/housing)	Powder-coated
Colour (hood/housing)	RAL 9005 (jet black)
Material (seal)	NBR
Material (locking)	Stainless steel
Material (contacts)	Copper alloy
Material flammability class acc. to UL 94	V-0
RoHS	compliant with exemption
RoHS exemptions	**6c:** Copper alloy containing up to 4 % lead by weight

Derating

Current carrying capacity

The current carrying capacity of the connectors is limited by the thermal load capability of the contact element material including the connections and the insulating parts. The derating curve is therefore valid for currents which flow constantly (non-intermittent) through each contact element of the connector evenly, without exceeding the allowed maximum temperature.

Measuring and testing techniques acc. to IEC 60512-5-2

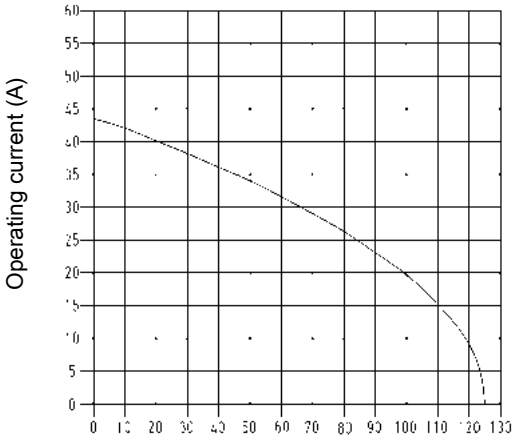

Conductor cross-section 4 mm²

Specifications and approvals

EN 60664-1
IEC 61984
UL 2237 PVVA.E318390
CSA-C22.2 No. 182.3 PVVA7.E318390

CE

Han-Power® T with 3x Han® Q 4/2

Number of contacts

4+ ⏚

40 A 400/690 V 6 kV 3
+ 2 additional signal contacts
10 A 250 V 4 kV 3

Identification	Part number	Drawing (dimensions in mm)
Han-Power® T , Energy distributor, With 3x Han® Q 2/0, in Han-Compact® Housings, bulkhead mounting 	09 12 008 4720	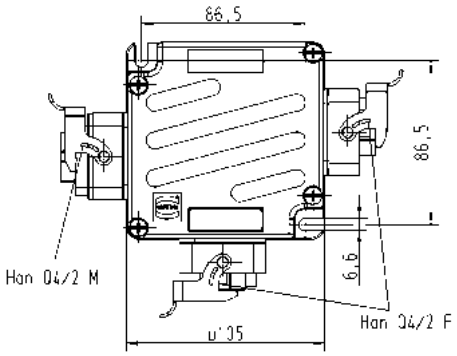 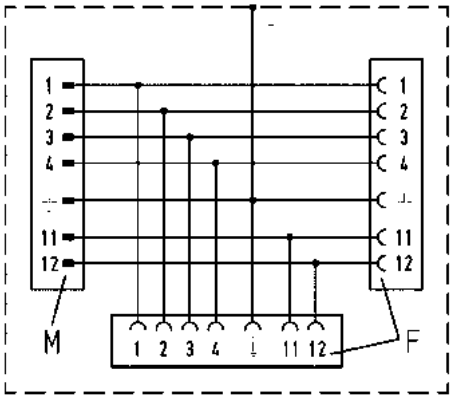 Wiring diagram

Han-Power® T with 3x Han-Modular® Twin

Features

- One connection for the power input and the power output
- 1 T-connection to device
- 3 power contacts
- 4 signal contacts
- Metal hoods / housings
- Locking levers: Han-Easy Lock®

Technical characteristics

Number of contacts	3
Additional contacts	+ 4 additional signal contacts
Electrical data acc. to IEC 61984	40 A 400/690 V 6 kV 3
Rated current	40 A
Rated voltage conductor-earth	400 V
Rated voltage conductor-conductor	690 V
Rated impulse voltage	6 kV
Pollution degree	3
Electrical data, signal	16 A 400 V 6 kV 3
Rated current (signal)	16 A
Rated voltage (signal)	400 V
Rated impulse voltage (signal)	6 kV
Pollution degree (signal)	3
Rated voltage acc. to UL	600 V
Insulation resistance	≥10^{10} Ω
Mating cycles	≥500
Degree of protection acc. to IEC 60529	IP65
Material (hood/housing)	Zinc die-cast
Surface (hood/housing)	Powder-coated
Colour (hood/housing)	RAL 7037 (dust grey)
Material (seal)	NBR
Material (locking)	Polycarbonate, Stainless steel
Material (contacts)	Copper alloy
Material flammability class acc. to UL 94	V-0
RoHS	compliant with exemption
RoHS exemptions	**6c:** Copper alloy containing up to 4 % lead by weight

Derating

Current carrying capacity

The current carrying capacity of the connectors is limited by the thermal load capability of the contact element material including the connections and the insulating parts. The derating curve is therefore valid for currents which flow constantly (non-intermittent) through each contact element of the connector evenly, without exceeding the allowed maximum temperature.

Measuring and testing techniques acc. to IEC 60512-5-2

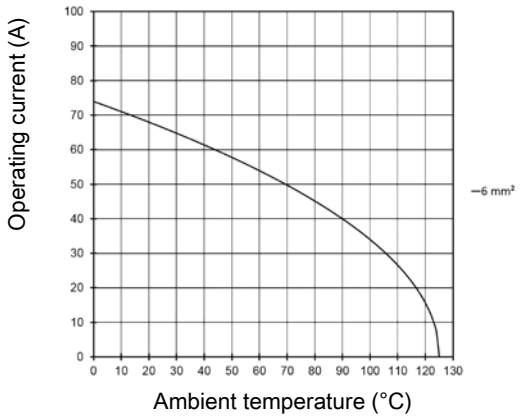

Conductor cross-section 10 mm²

Specifications and approvals

EN 60664-1
IEC 61984

CE

Han-Power® T with 3x Han-Modular® Twin

Number of contacts

3

40 A 400/690 V 6 kV 3
+ 4 additional signal contacts
16 A 400 V 6 kV 3

Identification	Part number	Drawing (dimensions in mm)
Han-Power® T , Energy distributor, With 3x Han-Modular® Twin, Bulkhead mounted housings 	09 12 008 4760	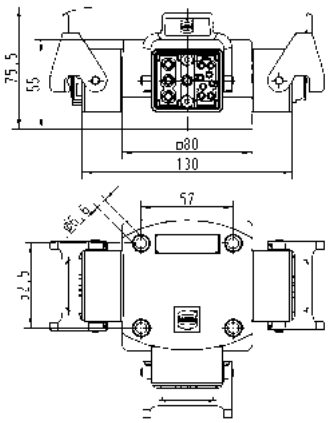 Wiring diagram

Technical characteristics

Material (seal)	NBR
Colour (seal)	Black

Technical characteristics

Material (accessories)	NBR
Colour (accessories)	Black
RoHS	compliant

Identification	Cable diameter (mm)	Part number	Drawing (dimensions in mm)
Grommet, Han-Power® T 	7 ... 10 10 ... 13 13 ... 16 16 ... 19 19 ... 22	09 12 000 9969 09 12 000 9970 09 12 000 9971 09 12 000 9972 09 12 000 9973	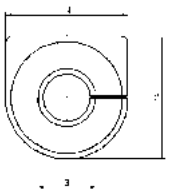
Dummy plugs 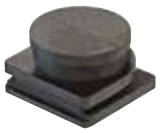		09 12 000 9974	

Han® HMC

Contents	Page
Module overview for applications with Han® HMC	**16.3**
Han D® HMC	**16.5**
Han DD® HMC	**16.8**
Han E® HMC	**16.13**
Han® ES Press HMC	**16.18**
Han® EEE HMC	**16.23**
Contacts	**16.26**
Han® HMC hoods/housings	**16.30**
Docking frame	**16.39**

Features

This series Han® HMC (High Mating Cycles) is a connector series specifically aiming at industrial applications for 10,000 mating cycles.

Benefits:

- High mechanical robustness
- Simple and easy understandable design
- Optimized concept for signal and power transmission
- Low mating and unmating forces
- High contact density

General Description

Han® B HMC hoods with high performance locking pin





Han D® and Han E® crimp contacts with specific HMC gold coating and a constant contact force

Ground contacts of crimp inserts with long lasting HMC contact spring





Han® B housings with Han-Easy Lock® HMC locking lever

Module overview for applications with Han® HMC

Series	Han E® module	Han® EE module	Han E® Protected module	Han® EEE module
Number of contacts	6	8	6	20
Modules	Crimp terminal	Crimp terminal	Crimp terminal	Crimp terminal
		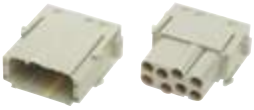		
Rated current	16 A	16 A	16 A	16 A
Rated voltage	500 V	400 V	830 V	500 V
Wire gauge	0.14 ... 4 mm²	0.14 ... 4 mm²	0.14 ... 4 mm²	0.14 ... 4 mm²
Male insert (M)	09 14 006 3001	09 14 008 3001	09 14 006 3041	09 14 020 3001
Female insert (F)	09 14 006 3101	09 14 008 3101	09 14 006 3141	09 14 020 3101

Series	Han DD® module	Han® DDD module	Han® High Density module	
Number of contacts	12	17	25	
Modules	Crimp terminal	Crimp terminal	Crimp terminal	
		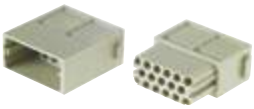		
Rated current	10 A	10 A	4 A	
Rated voltage	250 V	160 V	50 V	
Wire gauge	0.14 ... 2.5 mm²	0.14 ... 2.5 mm²	0.08 ... 0.52 mm²	
Male insert (M)	09 14 012 3001	09 14 017 3001	09 14 025 3001	
Female insert (F)	09 14 012 3101	09 14 017 3101	09 14 025 3101	

Series	Han® 40 A Crimp module	Han® C module	Han® CC Protected module	Han® CD module
Number of contacts	2	3	4	3 / 4
Modules	Crimp terminal	Crimp terminal	Crimp terminal	Crimp terminal
				
Rated current	40 A	40 A	40 A	40 A / 10 A
Rated voltage	1000 V	690 V	830 V	830 V / 830 V
Wire gauge	1.5 ... 10 mm²	1.5 ... 10 mm²	1.5 ... 6 mm²	0.15 ... 6 mm² / 0.14 ... 2.5 mm²
Male insert (M)	09 14 002 3002	09 14 003 3001	09 14 004 3041	09 14 007 3001
Female insert (F)	09 14 002 3102	09 14 003 3101	09 14 004 3141	09 14 007 3101

For more technical details see chapter 06

Module overview for applications with Han® HMC

Series	Han® GigaBit HMC module	Han® MegaBit HMC module	Han® MegaBit HMC module	Han® Shielded HMC module
Numbers of contacts	8	2 x 4	2 x 4	20
Termination	Crimp termination	Crimp termination	Crimp termination	Crimp termination
				
Wire gauge	Ethernet Cat. 6_A 0.08 ... 0.52 mm²	Ethernet Cat. 5e 0.14 ... 2.5 mm²	Ethernet Cat. 5e 0.14 ... 2.5 mm²	0.08 ... 0.52 mm²
Male insert (M)	09 14 208 3011	09 14 208 3016	09 14 208 3017	09 14 220 3013
Female insert (F)	09 14 208 3111	09 14 208 3116	09 14 208 3117	09 14 220 3113

Series	Hinged frame HMC 6 B	Hinged frame HMC 10 B	Hinged frame HMC 16 B	Hinged frame HMC 24 B
Number of modules	2	3	4	6
		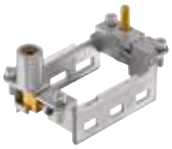		
Marking (A...F)	09 14 206 0303	09 14 210 0303	09 14 216 0303	09 14 224 0303
Marking (a...f)	09 14 206 0313	09 14 210 0313	09 14 216 0313	09 14 224 0313

Series	Docking frame 6 B	Docking frame 10 B	Docking frame 16 B	Docking frame 24 B
Number of modules	2	3	4	6
				
Marking (A...F)	09 14 006 1701	09 14 010 1701	09 14 016 1701	09 14 024 1701
Marking (a...f)	09 14 006 1711	09 14 010 1711	09 14 016 1711	09 14 024 1711

For more technical details see chapter 06

Features

- High density of contacts
- Time saving rapid termination by use of crimping contacts
- for requirements up to 250 V / 10 A
- for hoods/housings in the Han® B HMC series
- Han D® HMC contacts available with special HMC gold plating for 10,000 mating cycles

Technical characteristics

Number of contacts	40, 64
Electrical data acc. to IEC 61984	10 A 250 V 4 kV 3
Rated current	10 A
Rated voltage	250 V
Rated impulse voltage	4 kV
Pollution degree	3
Rated voltage acc. to UL	600 V
Rated voltage acc. to CSA	600 V
Insulation resistance	≥10^{10} Ω
Limiting temperature	-40 ... +125 °C
Mating cycles with other HMC components	≥10000
Material (insert)	Polycarbonate
Colour (insert)	RAL 7032 (pebble grey)
Material flammability class acc. to UL 94	V-0
RoHS	compliant

Derating

Current carrying capacity

The current carrying capacity of the connectors is limited by the thermal load capability of the contact element material including the connections and the insulating parts. The derating curve is therefore valid for currents which flow constantly (non-intermittent) through each contact element of the connector evenly, without exceeding the allowed maximum temperature.

Measuring and testing techniques acc. to IEC 60512-5-2

Han® 40 D HMC

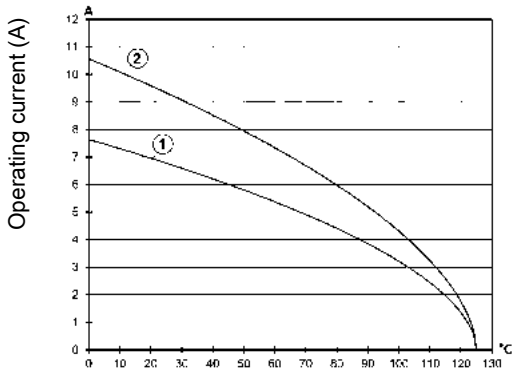

Ambient temperature (°C)

① 0.75 mm²
② 1.5 mm²

Han® 64 D HMC

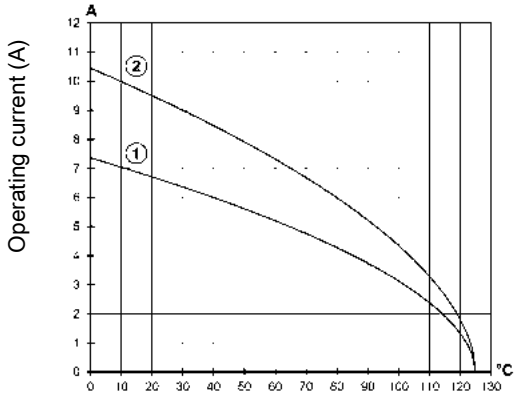

Ambient temperature (°C)

① 0.75 mm²
② 1.5 mm²

Specifications and approvals

EN 60664-1
IEC 61984
EN 175301-801
UL 1977 ECBT2.E235076
CSA-C22.2 No. 182.3 ECBT8.E235076
DNV GL

Number of contacts

40+ ⏚

10 A 250 V 4 kV 3

Identification	Conductor cross-section (mm²)	Part number Male	Part number Female	Drawing (dimensions in mm)
Han D® HMC, Crimp termination  Please order crimp contacts separately.	0,14 ... 2,5	09 21 240 3001	09 21 240 3101	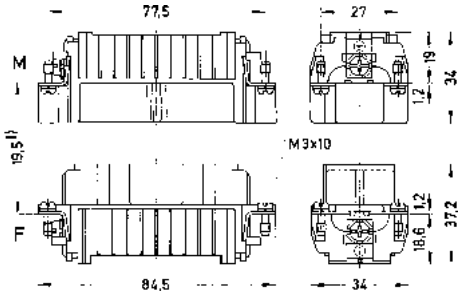 1) distance for contact max. 21 mm 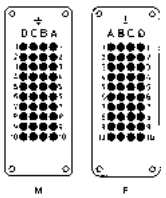 Contact arrangement (view from termination side) 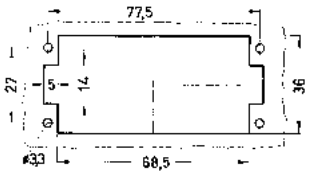 Panel cut out for use without Hoods/Housings

Number of contacts

64+ ⏚

10 A 250 V 4 kV 3

Identification	Conductor cross-section (mm²)	Part number Male	Part number Female	Drawing (dimensions in mm)
Han D® HMC, Crimp termination  Please order crimp contacts separately.	0,14 ... 2,5	09 21 264 3001	09 21 264 3101	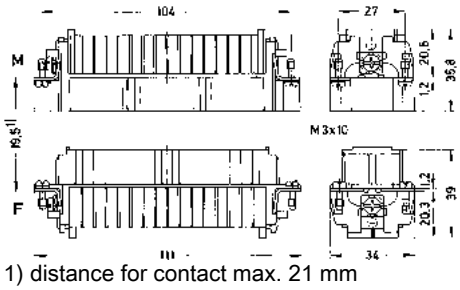 1) distance for contact max. 21 mm 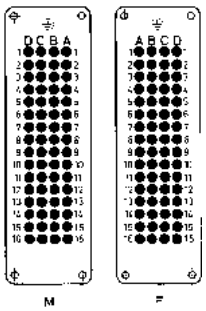 Contact arrangement (view from termination side) 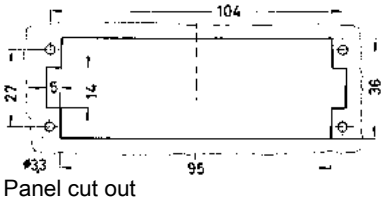 Panel cut out for use without Hoods/Housings

Features

- High density of contacts
- Time saving rapid termination by use of crimping contacts
- for requirements up to 250 V / 10 A
- for hoods/housings in the Han® B HMC series
- Han D® HMC contacts available with special HMC gold plating for 10,000 mating cycles

Technical characteristics

Number of contacts	24, 42, 72, 108
Electrical data acc. to IEC 61984	10 A 250 V 4 kV 3
Rated current	10 A
Rated voltage	250 V
Rated impulse voltage	4 kV
Pollution degree	3
Rated voltage acc. to UL	600 V
Rated voltage acc. to CSA	600 V
Insulation resistance	≥10^{10} Ω
Limiting temperature	-40 ... +125 °C
Mating cycles with other HMC components	≥10000
Material (insert)	Polycarbonate
Colour (insert)	RAL 7032 (pebble grey)
Material flammability class acc. to UL 94	V-0
RoHS	compliant

Derating

Current carrying capacity

The current carrying capacity of the connectors is limited by the thermal load capability of the contact element material including the connections and the insulating parts. The derating curve is therefore valid for currents which flow constantly (non-intermittent) through each contact element of the connector evenly, without exceeding the allowed maximum temperature.

Measuring and testing techniques acc. to IEC 60512-5-2

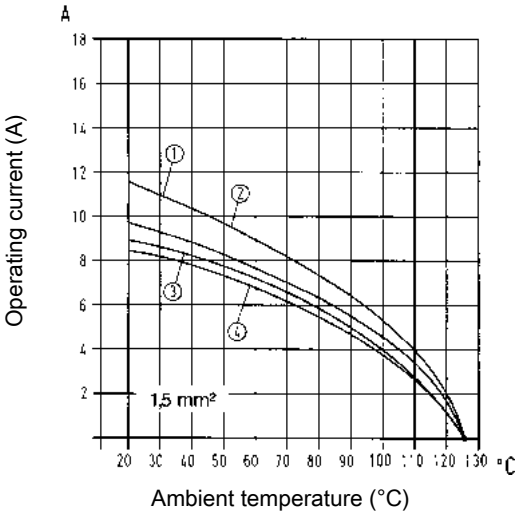

① Han® 24 DD HMC
② Han® 42 DD HMC
③ Han® 72 DD HMC
④ Han® 108 DD HMC

Derating

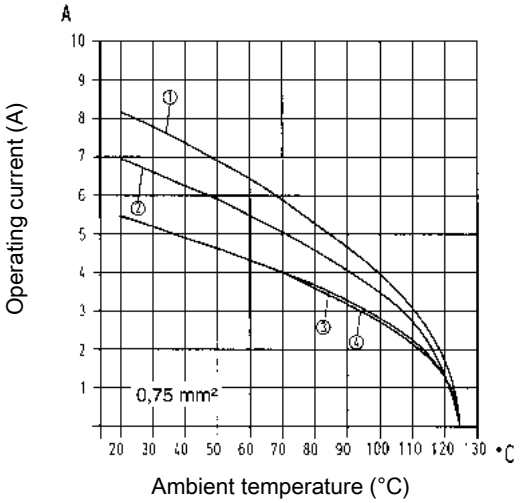

① Han® 24 DD HMC
② Han® 42 DD HMC
③ Han® 72 DD HMC
④ Han® 108 DD HMC

Specifications and approvals

EN 60664-1
IEC 61984
UL 1977 ECBT2.E235076
CSA-C22.2 No. 182.3 ECBT8.E235076
DNV GL

Number of contacts

24+ ⏚

10 A 250 V 4 kV 3

Identification	Conductor cross-section (mm²)	Part number Male	Part number Female	Drawing (dimensions in mm)
Han DD® HMC, Crimp termination  Please order crimp contacts separately.	0,14 ... 2,5	09 16 224 3001	09 16 224 3101	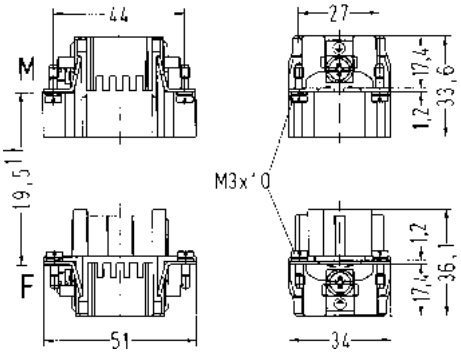 1) distance for contact max. 21 mm 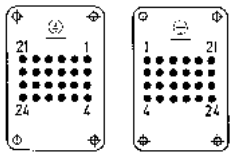 Contact arrangement (view from termination side) 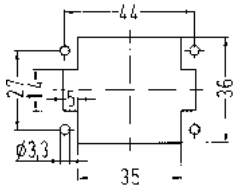 Panel cut out for use without Hoods/Housings

Number of contacts

42+ ⏚

10 A 250 V 4 kV 3

Identification	Conductor cross-section (mm²)	Part number Male	Part number Female	Drawing (dimensions in mm)
Han DD® HMC, Crimp termination  Please order crimp contacts separately.	0,14 ... 2,5	09 16 242 3001	09 16 242 3101	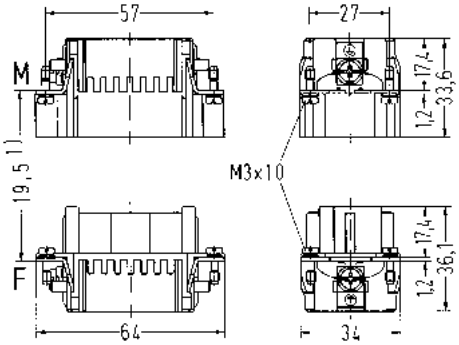 1) distance for contact max. 21 mm 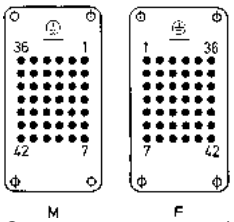 Contact arrangement (view from termination side) 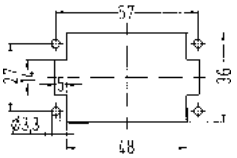 Panel cut out for use without Hoods/Housings

Number of contacts

72+ ⏚

10 A 250 V 4 kV 3

Identification	Conductor cross-section (mm²)	Part number Male	Part number Female	Drawing (dimensions in mm)
Han DD® HMC, Crimp termination  Please order crimp contacts separately.	0,14 ... 2,5	09 16 272 3001	09 16 272 3101	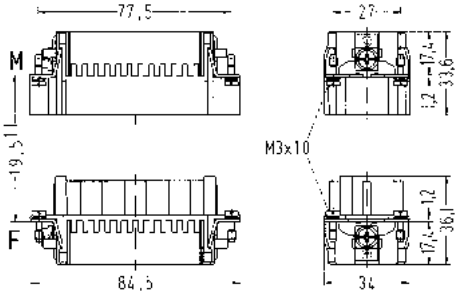 1) distance for contact max. 21 mm 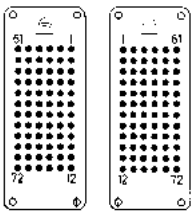 Contact arrangement (view from termination side) 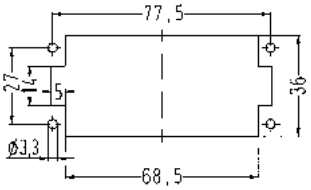 Panel cut out for use without Hoods/Housings

Number of contacts

108+ ⏚

10 A 250 V 4 kV 3

Identification	Conductor cross-section (mm²)	Part number Male	Part number Female	Drawing (dimensions in mm)
Han DD® HMC, Crimp termination  Please order crimp contacts separately.	0,14 ... 2,5	09 16 208 3001	09 16 208 3101	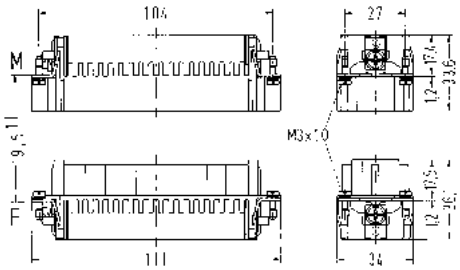 1) distance for contact max. 21 mm 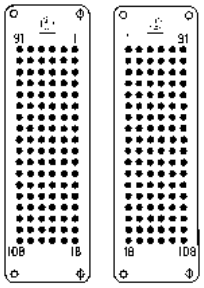 Contact arrangement (view from termination side) 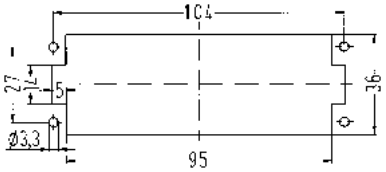 Panel cut out for use without Hoods/Housings

Features

- Time saving rapid termination by use of crimping contacts
- for hoods/housings in the Han® B HMC series
- Han E® HMC contacts available with special HMC gold plating for 10,000 mating cycles

Technical characteristics

Number of contacts	6, 10, 16, 24
Electrical data acc. to IEC 61984	16 A 500 V 6 kV 3
Rated current	16 A
Rated voltage	500 V
Rated impulse voltage	6 kV
Pollution degree	3
Insulation resistance	≥10^{10} Ω
Limiting temperature	-40 ... +125 °C
Mating cycles with other HMC components	≥10000
Material (insert)	Polycarbonate
Colour (insert)	RAL 7032 (pebble grey)
RoHS	compliant

Derating

Current carrying capacity

The current carrying capacity of the connectors is limited by the thermal load capability of the contact element material including the connections and the insulating parts. The derating curve is therefore valid for currents which flow constantly (non-intermittent) through each contact element of the connector evenly, without exceeding the allowed maximum temperature.

Measuring and testing techniques acc. to IEC 60512-5-2

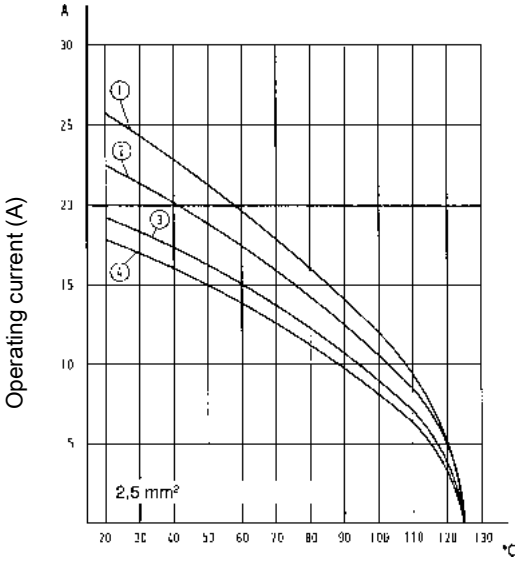

Ambient temperature (°C)

① Han® 6 E HMC
② Han® 10 E HMC
③ Han® 16 E HMC
④ Han® 24 E HMC

Derating

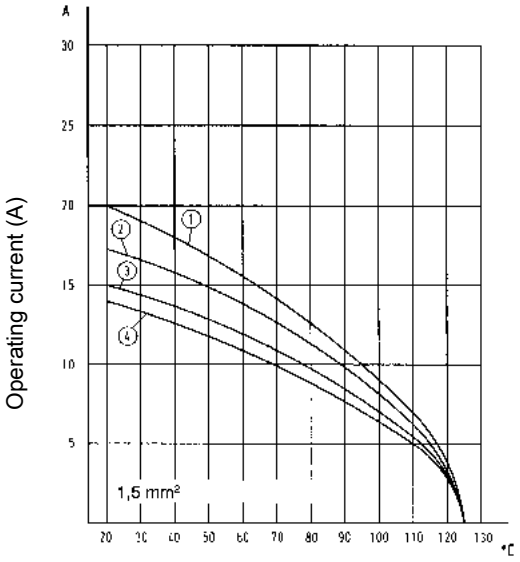

Ambient temperature (°C)

① Han® 6 E HMC
② Han® 10 E HMC
③ Han® 16 E HMC
④ Han® 24 E HMC

Specifications and approvals

EN 60664-1
IEC 61984
DNV GL

Number of contacts

6+ ⏚

16 A 500 V 6 kV 3

Identification	Conductor cross-section (mm²)	Part number Male	Part number Female	Drawing (dimensions in mm)
Han E® HMC, Crimp termination 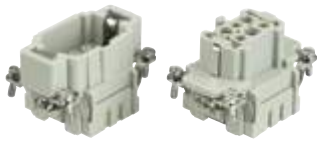 Please order crimp contacts separately.	0,14 ... 4	09 33 206 2602	09 33 206 2702	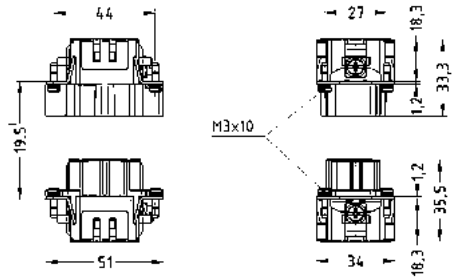 1) distance for contact max. 21 mm 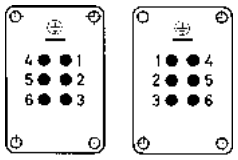 Contact arrangement (view from termination side) 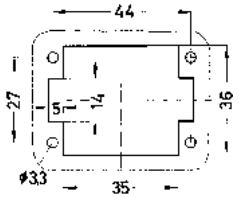 Panel cut out

Number of contacts

10+

16 A 500 V 6 kV 3

Identification	Conductor cross-section (mm²)	Part number Male	Part number Female	Drawing (dimensions in mm)
Han E® HMC, Crimp termination  Please order crimp contacts separately.	0,14 ... 4	09 33 210 2602	09 33 210 2702	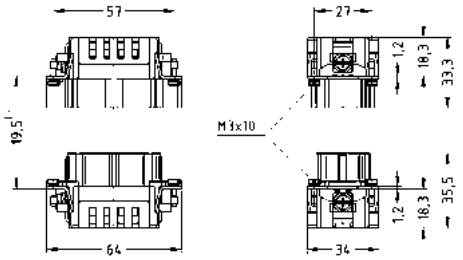 1) distance for contact max. 21 mm 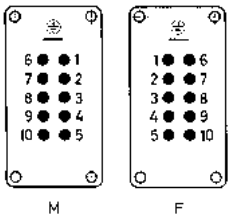 Contact arrangement (view from termination side) 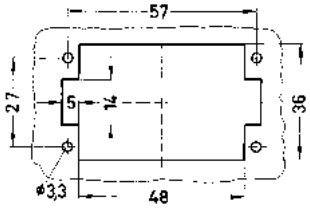 Panel cut out

Number of contacts

16+ ⏚

16 A 500 V 6 kV 3

Identification	Conductor cross-section (mm²)	Part number Male	Part number Female	Drawing (dimensions in mm)
Han E® HMC, Crimp termination  Please order crimp contacts separately.	0,14 ... 4	09 33 216 2602	09 33 216 2702	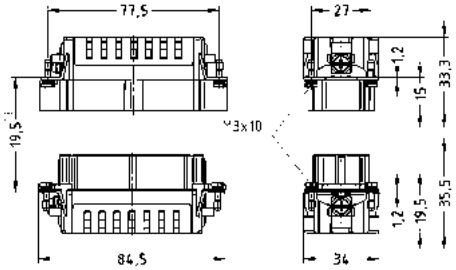 1) distance for contact max. 21 mm 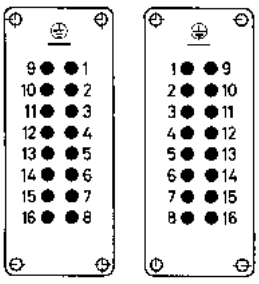 Contact arrangement (view from termination side) 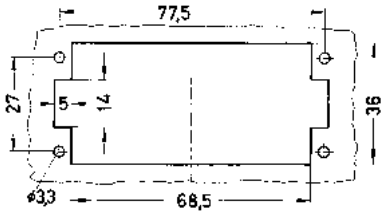 Panel cut out

Number of contacts

24+ ⏚

16 A 500 V 6 kV 3

Identification	Conductor cross-section (mm²)	Part number Male	Part number Female	Drawing (dimensions in mm)
Han E® HMC, Crimp termination 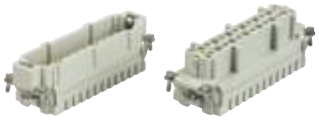 Please order crimp contacts separately.	0,14 ... 4	09 33 224 2602	09 33 224 2702	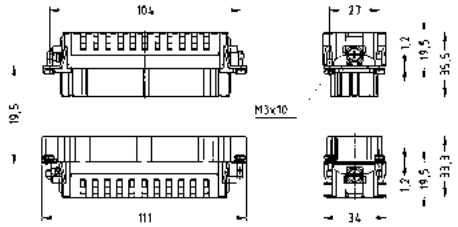 1) distance for contact max. 21 mm 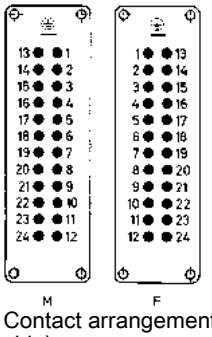 Contact arrangement (view from termination side) 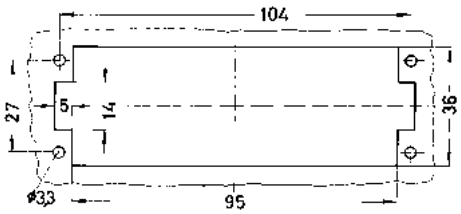 Panel cut out

Technical characteristics

Number of contacts	6, 10, 16, 24
Electrical data acc. to IEC 61984	16 A 500 V 6 kV 3
Rated current	16 A
Rated voltage	500 V
Rated impulse voltage	6 kV
Pollution degree	3
Insulation resistance	≥10^{10} Ω
Contact resistance	≤3 mΩ
Limiting temperature	-40 ... +125 °C
Mating cycles with other HMC components	≥10000
Material (insert)	Polycarbonate
Colour (insert)	RAL 7032 (pebble grey)
Material (contacts)	Copper alloy
Material flammability class acc. to UL 94	V-0

Derating

Current carrying capacity

The current carrying capacity of the connectors is limited by the thermal load capability of the contact element material including the connections and the insulating parts. The derating curve is therefore valid for currents which flow constantly (non-intermittent) through each contact element of the connector evenly, without exceeding the allowed maximum temperature.

Measuring and testing techniques acc. to IEC 60512-5-2

Han® ES Press

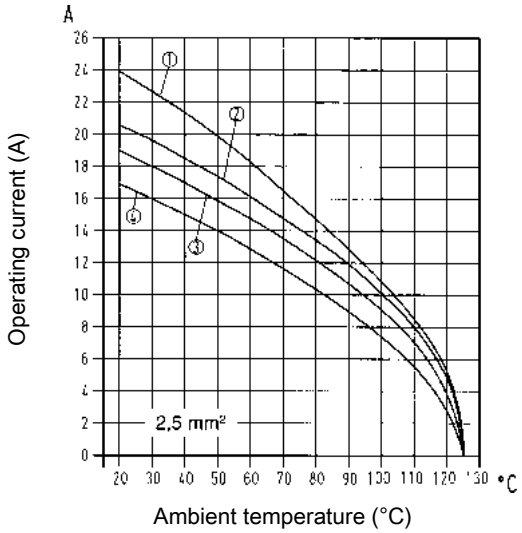

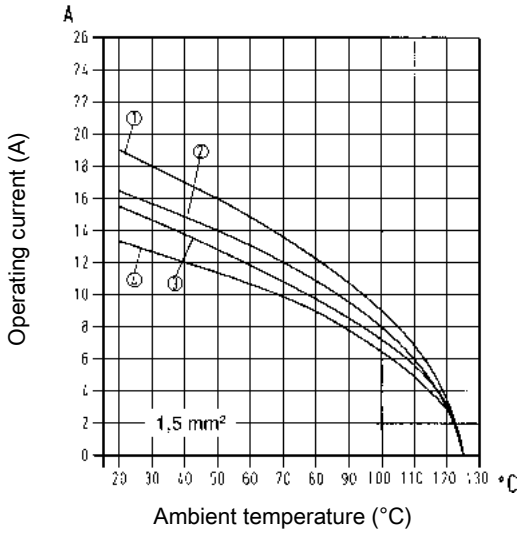

① Han® 6 ES Press
② Han® 10 ES Press
③ Han® 16 ES Press Han® 32 ES Press
④ Han® 24 ES Press Han® 48 ES Press

Specifications and approvals

EN 60664-1
IEC 61984
DNV GL

Number of contacts

6+ ⏚

16 A 500 V 6 kV 3

Identification	Conductor cross-section (mm²)	Part number Male	Part number Female	Drawing (dimensions in mm)
Han® ES Press , Cage-clamp termination, Contact surface: HMC gold plated  for hoods/housings high construction only Blue slide	0,14 ... 2,5	09 33 206 2648	09 33 206 2748	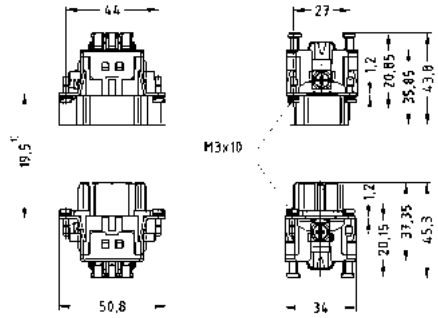 Distance for contact max. 21 mm 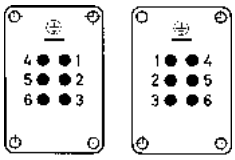 Contact arrangement (view from termination side) 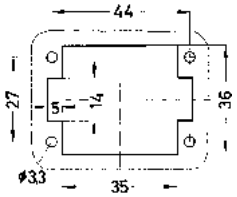 Panel cut out

Number of contacts

10+ ⏚

16 A 500 V 6 kV 3

Identification	Conductor cross-section (mm²)	Part number Male	Part number Female	Drawing (dimensions in mm)
Han® ES Press , Cage-clamp termination, Contact surface: HMC gold plated  for hoods/housings high construction only Blue slide	0,14 ... 2,5	09 33 210 2648	09 33 210 2748	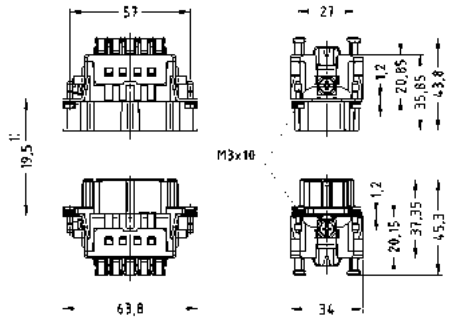 Distance for contact max. 21 mm 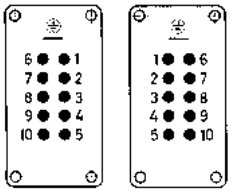 Contact arrangement (view from termination side) 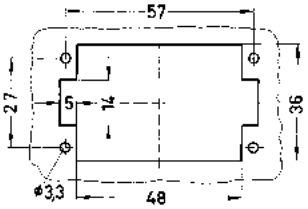 Panel cut out

Number of contacts

16+

16 A 500 V 6 kV 3

Identification	Conductor cross-section (mm²)	Part number Male	Part number Female	Drawing (dimensions in mm)
Han® ES Press , Cage-clamp termination, Contact surface: HMC gold plated 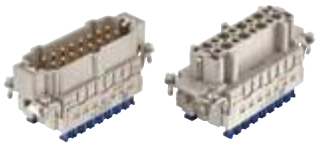 for hoods/housings high construction only Blue slide	0,14 ... 2,5	09 33 216 2648	09 33 216 2748	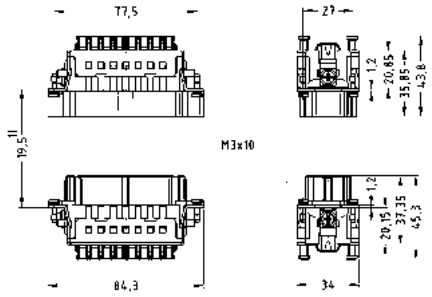 Distance for contact max. 21 mm 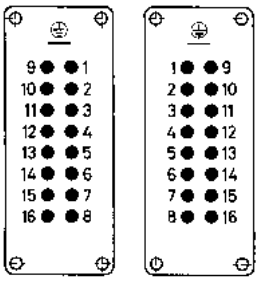 M F Contact arrangement (view from termination side) 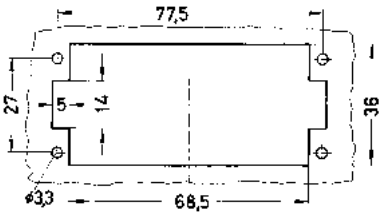 Panel cut out

Number of contacts

24+ ⏚

16 A 500 V 6 kV 3

Identification	Conductor cross-section (mm²)	Part number Male	Part number Female	Drawing (dimensions in mm)
Han® ES Press , Cage-clamp termination, Contact surface: HMC gold plated  for hoods/housings high construction only Blue slide	0,14 ... 2,5	09 33 224 2648	09 33 224 2748	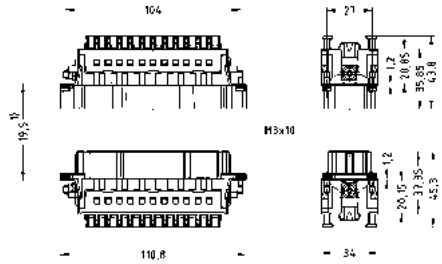 Distance for contact max. 21 mm 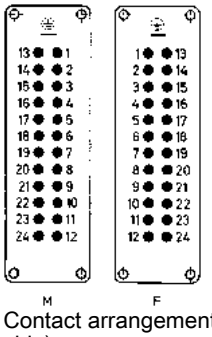 Contact arrangement (view from termination side) 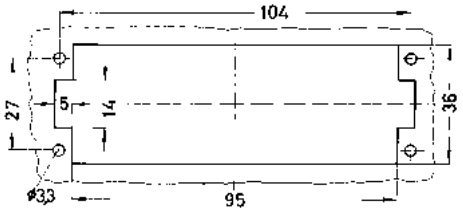 Panel cut out

Features

- Time saving rapid termination by use of crimping contacts
- Coded insert
- for hoods/housings in the Han® B HMC series
- Han E® HMC contacts available with special HMC gold plating for 10,000 mating cycles

Technical characteristics

Number of contacts	40, 64
Electrical data acc. to IEC 61984	16 A 500 V 6 kV 3
Rated current	16 A
Rated voltage	500 V
Rated impulse voltage	6 kV
Pollution degree	3
Insulation resistance	≥10^{10} Ω
Limiting temperature	-40 ... +125 °C
Mating cycles with other HMC components	≥10000
Material (insert)	Polycarbonate
Colour (insert)	RAL 7032 (pebble grey)
Material flammability class acc. to UL 94	V-0
RoHS	compliant

Derating

Current carrying capacity

The current carrying capacity of the connectors is limited by the thermal load capability of the contact element material including the connections and the insulating parts. The derating curve is therefore valid for currents which flow constantly (non-intermittent) through each contact element of the connector evenly, without exceeding the allowed maximum temperature.

Measuring and testing techniques acc. to IEC 60512-5-2

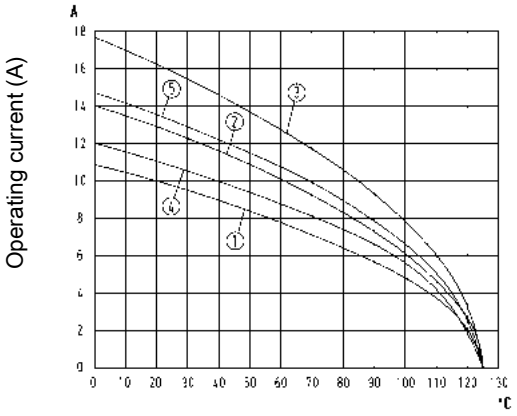

Ambient temperature (°C)

① Han® 64 EEE HMC 1.5 mm²
② Han® 64 EEE HMC 2.5 mm²
③ Han® 64 EEE HMC 4 mm²
④ Han® 40 EEE HMC 1.5 mm²
⑤ Han® 40 EEE HMC 2.5 mm²

Specifications and approvals

EN 60664-1
IEC 61984

Number of contacts

40+ ⏚

16 A 500 V 6 kV 3

Identification	Conductor cross-section (mm²)	Part number Male	Part number Female	Drawing (dimensions in mm)
Han® EEE HMC, Crimp termination  Please order crimp contacts separately.	0,14 ... 4	09 32 240 3001	09 32 240 3101	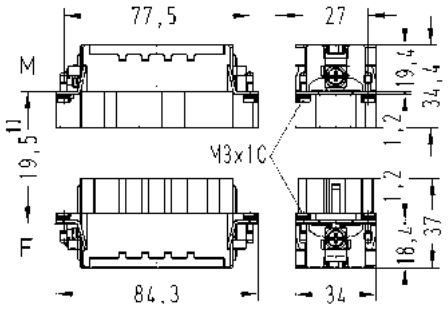 1) distance for contact max. 21 mm 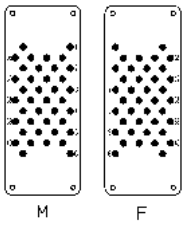 Contact arrangement (view from termination side) 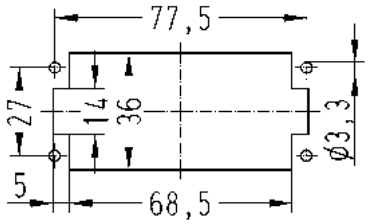 Panel cut out

Number of contacts

64+ ⏚

16 A 500 V 6 kV 3

Identification	Conductor cross-section (mm²)	Part number Male	Part number Female	Drawing (dimensions in mm)
Han® EEE HMC, Crimp termination  Please order crimp contacts separately.	0,14 ... 4	09 32 264 3001	09 32 264 3101	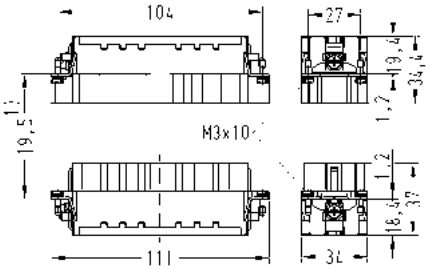 1) distance for contact max. 21 mm 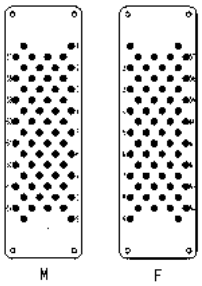 Contact arrangement (view from termination side) 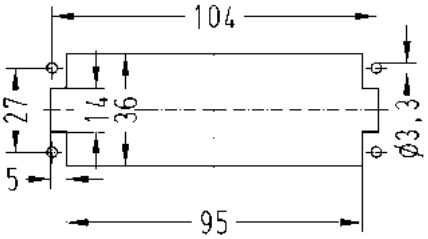 Panel cut out

Technical characteristics

Contact resistance	≤3 mΩ
Material (contacts)	Copper alloy
Material (accessories)	Thermoplastic
RoHS	compliant with exemption, compliant
RoHS exemptions	**6c:** Copper alloy containing up to 4 % lead by weight

Specifications and approvals

EN 60664-1
IEC 61984

Details

Crimping tools see chapter 90

Remarks on the crimp technique

The wire gauges mentioned in the catalogue refer to geometric wire gauges of cables.

Coding pin

Use of the coding pin prevents incorrect mating to other connectors of the same type. The male pin should be omitted from the opposing cavity in the male insert.

Identification	Conductor cross-section (mm²)	Part number Male	Part number Female	Drawing (dimensions in mm)
Han D® HMC, Crimp contact, Contact surface: HMC gold plated 	0,14 ... 0,37 0,5 0,75 1 1,5 2,5	09 15 200 6124 09 15 200 6123 09 15 200 6125 09 15 200 6122 09 15 200 6121 09 15 200 6126	09 15 200 6224 09 15 200 6223 09 15 200 6225 09 15 200 6222 09 15 200 6221 09 15 200 6226	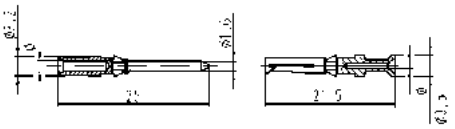
Han D® Han DD® , Coding pin  Only for crimp termination With loss of one contact			09 33 000 9915	

Wire gauge		⌀	Stripping length
0.14-0.37 mm²	AWG 26-22	0.9 mm	8 mm
0.5 mm²	AWG 20	1.1 mm	8 mm
0.75 mm²	AWG 18	1.3 mm	8 mm
1 mm²	AWG 18	1.45 mm	8 mm
1.5 mm²	AWG 16	1.75 mm	8 mm
2.5 mm²	AWG 14	2.25 mm	6 mm

Technical characteristics

Contact resistance	≤1 mΩ
Material (contacts)	Copper alloy
Material (accessories)	Thermoplastic
RoHS	compliant with exemption, compliant
RoHS exemptions	**6c:** Copper alloy containing up to 4 % lead by weight

Specifications and approvals

EN 60664-1
IEC 61984

Details

Crimping tools see chapter 90

Remarks on the crimp technique

The wire gauges mentioned in the catalogue refer to geometric wire gauges of cables.

Coding pin

Use of the coding pin prevents incorrect mating to other connectors of the same type. The male pin should be omitted from the opposing cavity in the male insert.

Identification	Conductor cross-section (mm²)	Part number Male	Part number Female	Drawing (dimensions in mm)
Han E® HMC, Crimp contact, Contact surface: HMC gold plated 	0,14 ... 0,37 0,5 0,75 1 1,5 2,5 4	09 33 200 6117 09 33 200 6122 09 33 200 6115 09 33 200 6118 09 33 200 6116 09 33 200 6123 09 33 200 6119	09 33 200 6217 09 33 200 6222 09 33 200 6215 09 33 200 6218 09 33 200 6216 09 33 200 6223 09 33 200 6221	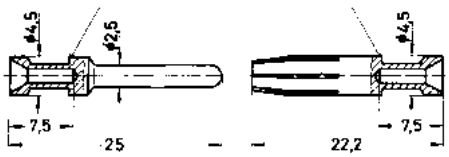
Han E® Han® EE Han® EEE , Coding pin  for crimp inserts only With loss of one contact			09 33 000 9954	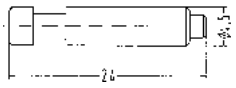

Conductor cross-section		Identification
0.14-0.37 mm²	AWG 26-22	no groove
0.5 mm²	AWG 20	no groove
0.75 mm²	AWG 18	1 groove*
1 mm²	AWG 18	1 groove
1.5 mm²	AWG 16	2 grooves
2.5 mm²	AWG 14	3 grooves
3 mm²	AWG 12	wide groove
4 mm²	AWG 12	no groove
* on the back crimp collar		

Stripping length 7.5 mm

Technical characteristics

Contact resistance	≤1 mΩ
Material (contacts)	Copper alloy
RoHS	compliant with exemption
RoHS exemptions	**6c:** Copper alloy containing up to 4 % lead by weight

Specifications and approvals

EN 60664-1
IEC 61984

Details

Crimping tools see chapter 90

Remarks on the crimp technique

The wire gauges mentioned in the catalogue refer to geometric wire gauges of cables.

Identification	Conductor cross-section (mm²)	Part number Male	Part number Female	Drawing (dimensions in mm)
Han® C HMC, Crimp contact, Contact surface: HMC gold plated 	1,5 2,5 4 6 10	09 32 200 6114 09 32 200 6115 09 32 200 6119 09 32 200 6118 09 32 200 6117	09 32 200 6224 09 32 200 6225 09 32 200 6229 09 32 200 6228 09 32 200 6227	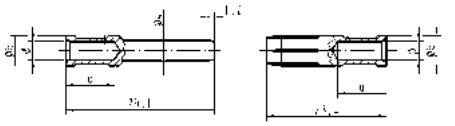 Wire gauge / ø / Stripping length 1.5 mm² AWG 16 — 1.75 mm — 9.5 mm 2.5 mm² AWG 14 — 2.25 mm — 9.5 mm 4 mm² AWG 12 — 2.85 mm — 9.5 mm 6 mm² AWG 10 — 3.5 mm — 9.5 mm 10 mm² AWG 8 — 4.3 mm — 15 mm

Technical characteristics

Contact resistance	≤10 mΩ
Material (contacts)	Copper alloy

Technical characteristics

RoHS	compliant with exemption
RoHS exemptions	**6c:** Copper alloy containing up to 4 % lead by weight

Identification	Conductor cross-section (mm²)	Part number Male	Part number Female	Drawing (dimensions in mm)
D-Sub , Crimp contact, Straight Turned , Contact surface: HMC gold plated 	0,08 ... 0,21 0,13 ... 0,33 0,33 ... 0,52	09 67 000 7570 09 67 000 5570 09 67 000 8570	09 67 000 7470 09 67 000 5470 09 67 000 8470	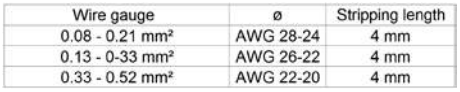

Wire gauge	ø	Stripping length
0.08 - 0.21 mm²	AWG 28-24	4 mm
0.13 - 0-33 mm²	AWG 26-22	4 mm
0.33 - 0.52 mm²	AWG 22-20	4 mm

Han® HMC hoods/housings

Features

- Metal hoods / housings
- Locking levers: Han-Easy Lock® with special locking reel
- Field of application: for excellent mechanical and electrical protection in demanding environments, for example, in the automobile and mechanical engineering industries also for process and regulation control applications
- Distinguishing feature: hoods/housings colour-coded grey (RAL 7037)

Technical characteristics

Limiting temperature	-40 ... +125 °C
Mating cycles with other HMC components	≥10000
Degree of protection acc. to IEC 60529	IP65
Type rating acc. to UL 50 / UL 50E	4, 4X, 12
Material (hood/housing)	Aluminium die-cast
Surface (hood/housing)	Powder-coated
Colour (hood/housing)	RAL 7037 (dust grey)
Material (seal)	NBR
Material (locking)	Polycarbonate, Stainless steel
Colour (locking)	RAL 7037 (dust grey)
Material flammability class acc. to UL 94 (locking levers)	V-0
RoHS	compliant

Specifications and approvals

DNV GL

Special hoods and housings for high mating cycles
Single locking lever

Identification	Cable entry	Part number Low construction	Part number High construction	Drawing (dimensions in mm)
Han® HMC , Hoods, Top entry 	1x M20 1x M25 1x M32	19 30 206 1440	19 30 206 0446 19 30 206 0447	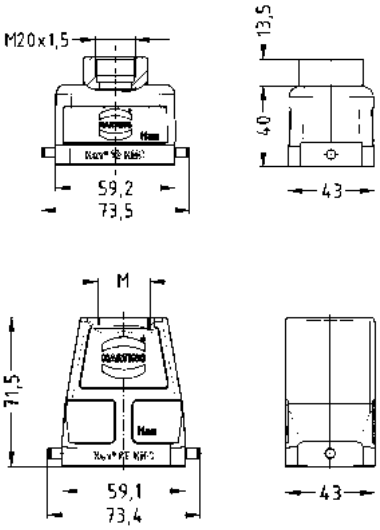
Han® HMC , Hoods, Side entry 	1x M20 1x M25 1x M32	19 30 206 1540 19 30 206 1541	19 30 206 0546 19 30 206 0547	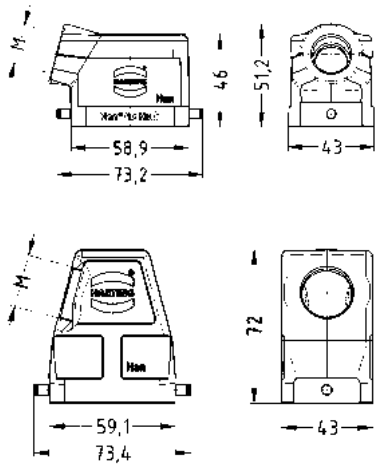
Han® HMC , Hoods 			09 30 206 0801	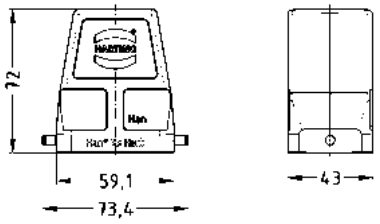

Han® HMC hoods/housings

Size 6 B

Identification	Cable entry	Part number Low construction	Part number High construction	Drawing (dimensions in mm)
Han® HMC , Bulkhead mounted housings, Han-Easy Lock® 		09 30 206 0301		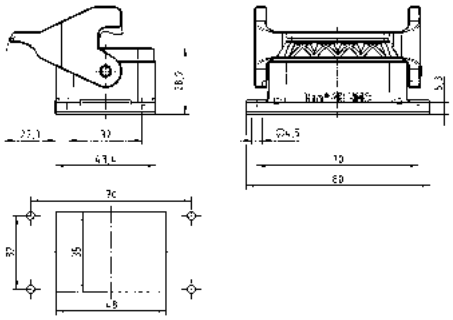 Panel cut out
Han® HMC , Surface mounted housing, Side entry, Han-Easy Lock® 	1x M20 2x M20 2x M25 2x M32	19 30 206 1290	19 30 206 1250 19 30 206 0291 19 30 206 0292	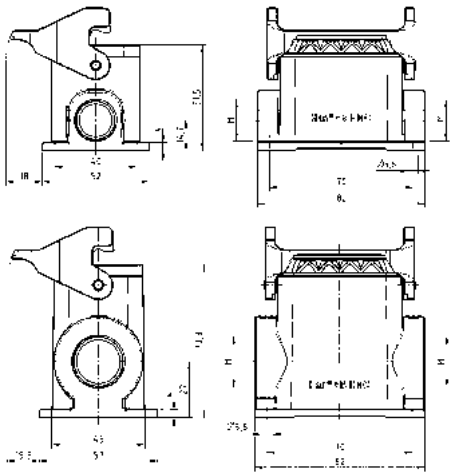
Han® HMC , Cable to cable housing, Top entry, Han-Easy Lock® 	1x M20 1x M25 1x M32	19 30 206 1750	19 30 206 0756 19 30 206 0757	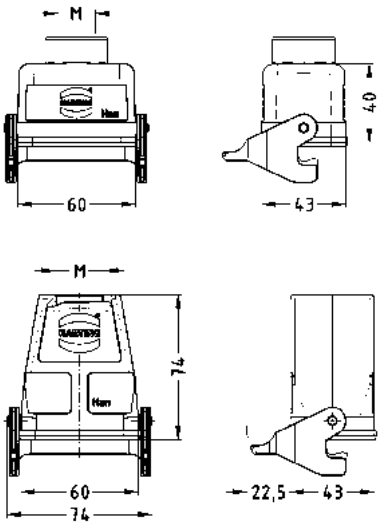

Han® HMC hoods/housings

Size 10 B

Special hoods and housings for high mating cycles
Single locking lever

Identification	Cable entry	Part number Low construction	Part number High construction	Drawing (dimensions in mm)
Han® HMC , Hoods, Top entry 	1x M20 1x M25 1x M32	19 30 210 1440 19 30 210 1441	19 30 210 0447	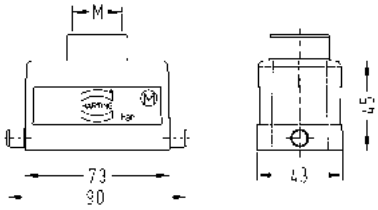 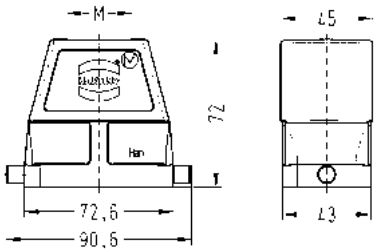
Han® HMC , Hoods, Side entry 	1x M20 1x M25 1x M32	19 30 210 1540 19 30 210 1541	19 30 210 0547	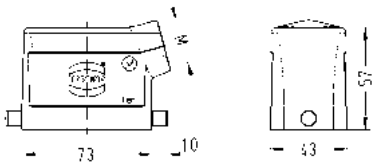 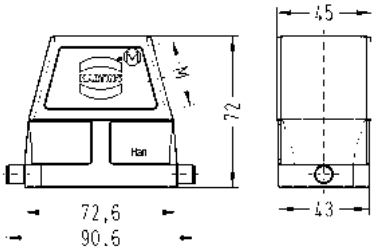
Han® HMC , Hoods, Without cable entry 			09 30 210 0803	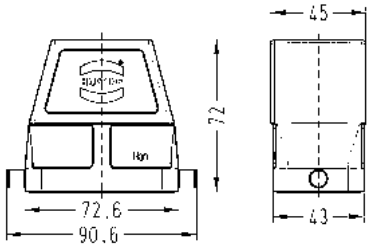

Han® HMC hoods/housings Size 10 B

Identification	Cable entry	Part number Low construction	Part number High construction	Drawing (dimensions in mm)
Han® HMC , Bulkhead mounted housings, Han-Easy Lock® 		09 30 210 0305		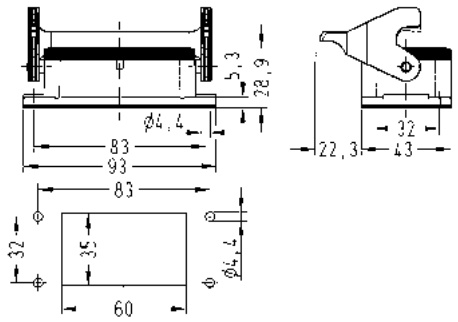 Panel cut out
Han® HMC , Surface mounted housing, Side entry, Han-Easy Lock® 	1x M20 2x M20 2x M25 2x M32	19 30 210 1250 19 30 210 1290	19 30 210 0291 19 30 210 0292	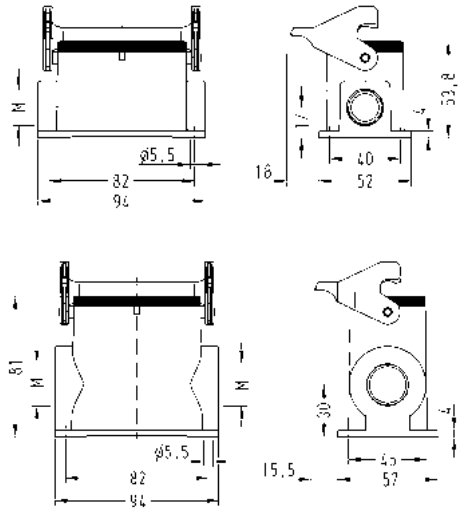
Han® HMC , Cable to cable housing, Top entry, Han-Easy Lock® 	1x M20 1x M25	19 30 210 1750	19 30 210 0756	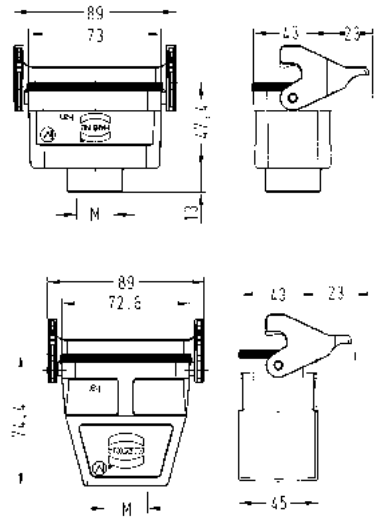

Special hoods and housings for high mating cycles
Single locking lever

Identification	Cable entry	Part number Low construction	Part number High construction	Drawing (dimensions in mm)
Han® HMC , Hoods, Top entry 	1x M25 1x M32 1x M40	19 30 216 1441 19 30 216 1442	19 30 216 0447 19 30 216 0448	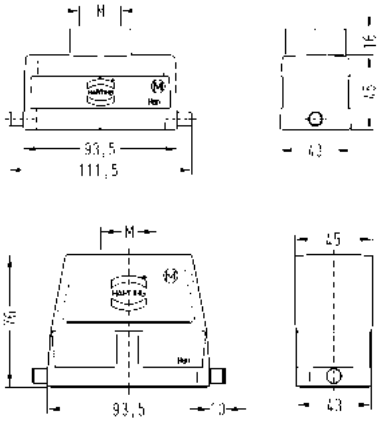
Han® HMC , Hoods, Side entry 	1x M25 1x M32 1x M40	19 30 216 1541 19 30 216 1542	19 30 216 0547 19 30 216 0548	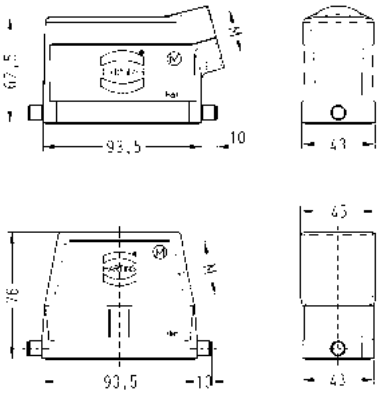
Han® HMC , Hoods, Without cable entry 			09 30 216 0803	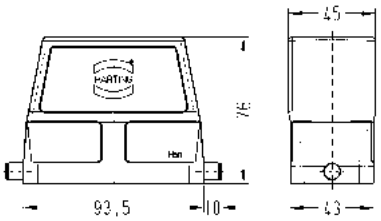

Han® HMC hoods/housings

Size 16 B

Identification	Cable entry	Part number Low construction	Part number High construction	Drawing (dimensions in mm)
Han® HMC , Bulkhead mounted housings, Han-Easy Lock® 		09 30 216 0307		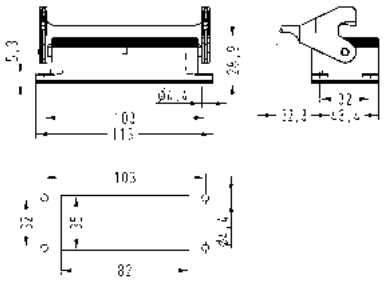 Panel cut out
Han® HMC , Surface mounted housing, Side entry, Han-Easy Lock® 	1x M25 1x M32 2x M25 2x M32	19 30 216 1251 19 30 216 1291	19 30 216 0252 19 30 216 0291 19 30 216 0292	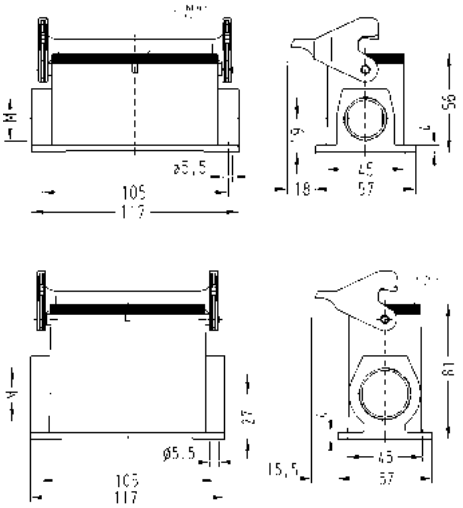
Han® HMC , Cable to cable housing, Top entry, Han-Easy Lock® 	1x M25 1x M32	19 30 216 1751 19 30 216 1752	19 30 216 0757	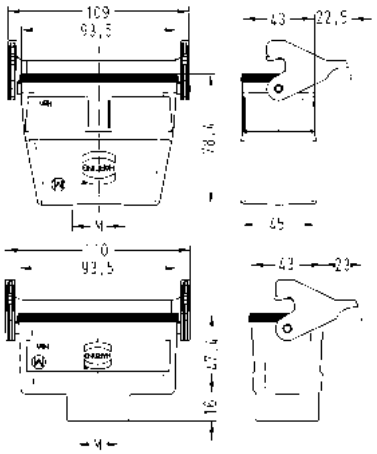

Han® HMC hoods/housings

Size 24 B

Special hoods and housings for high mating cycles
Single locking lever

Identification	Cable entry	Part number Low construction	Part number High construction	Drawing (dimensions in mm)
Han® HMC , Hoods, Top entry 	1x M32 1x M40	19 30 224 1442	19 30 224 0447 19 30 224 0448	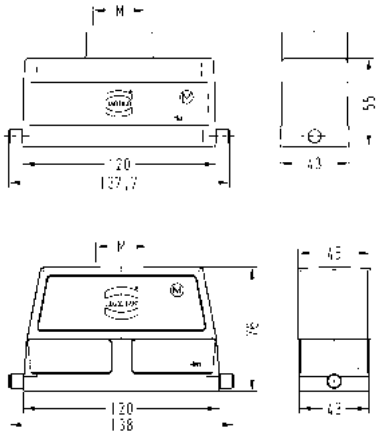
Han® HMC , Hoods, Side entry 	1x M25 1x M32 1x M40	19 30 224 1541 19 30 224 1542	19 30 224 0547 19 30 224 0548	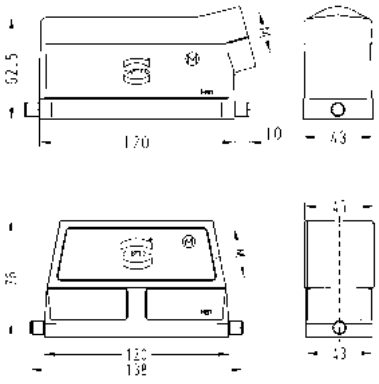
Han® HMC , Hoods, Without cable entry 			09 30 224 0803	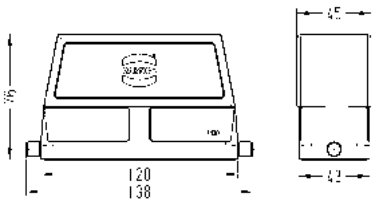

Han® HMC hoods/housings

Size 24 B

Identification	Cable entry	Part number Low construction	Part number High construction	Drawing (dimensions in mm)
Han® HMC , Bulkhead mounted housings, Han-Easy Lock® 		09 30 224 0307		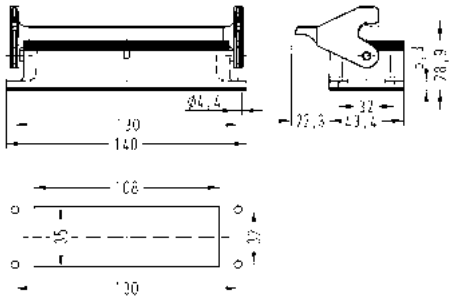 Panel cut out
Han® HMC , Surface mounted housing, Side entry, Han-Easy Lock® 	1x M25 2x M25 2x M32	19 30 224 1251 19 30 224 1291	19 30 224 0292	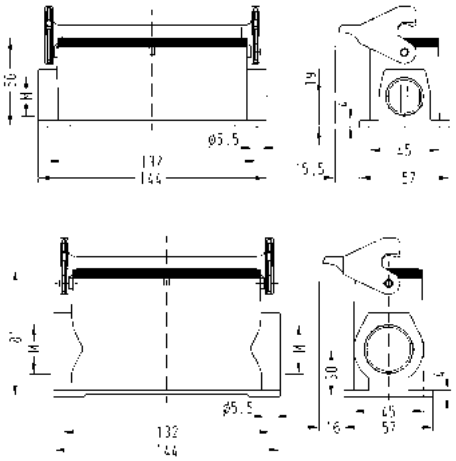
Han® HMC , Cable to cable housing, Top entry, Han-Easy Lock® 	1x M32	19 30 224 1752	19 30 224 0757	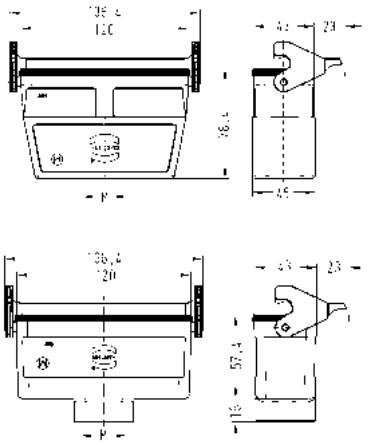

Docking frame



Features

- Suitable for all inserts of the series Han E®, Han E® HMC, Han EE®, Han EE® HMC, Han EEE®, Han EEE® HMC, Han® ES, Han D® (size B), Han D® HMC, Han DD®, Han DD® HMC, Han-Com®, Han® HsB, Han-Modular®
- Due to the floating system of the docking frame the PE connection of the mounting base has to be installed separately.
- Inserts are protected against mechanical damage

Technical characteristics

Mating cycles	≥500
Mating cycles with other HMC components	≥10000
Material (accessories)	Stainless steel
RoHS	compliant with exemption
RoHS exemptions	**6a:** Lead as an alloying element in steel for machining purposes and in galvanised steel containing up to 0,35 % lead by weight

Identification	Size	Part number	Drawing (dimensions in mm)
Docking frame, Pack contents: 1 frame, 4 cheese head shoulder screws (Steel, zinc plated) to fix the docking frame  Pull-in-range x-axis: ± 1.5 mm Pull-in-range y-axis: ± 1.5 mm	06 B 10 B 16 B 24 B	09 30 006 1704 09 30 010 1704 09 30 016 1704 09 30 024 1704	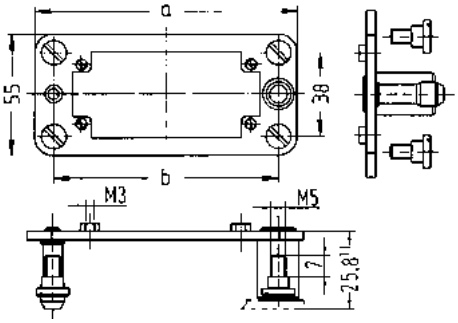 Distance for electrical and FO contacts max. 27 mm; for Han-Modular® series max. 26.5 mm 6 B: a=86; b=69 10 B: a=99; b=82 16 B: a= 119.5 ; b= 102.5 24 B: a=146; b=129 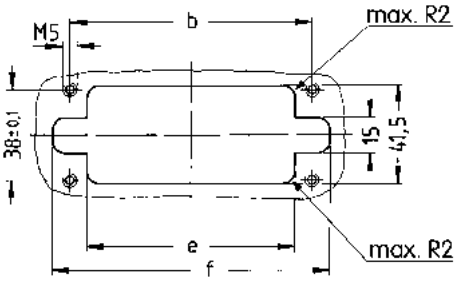 6 B: b= 69; e= 54.5; f= 84 10 B: b= 82; e= 67.5; f= 97 16 B: b= 102.5; e= 88; f= 117.5 24 B: b= 129; e= 114.5; f= 144

Han® High Temp

Contents | Page

Han® High Temp inserts **17.3**

Han® High Temp contacts **17.8**

Han® High Temp hoods/housings **17.9**

Description

We used high-quality materials with wide temperature ranges to produce connectors that are uniquely suited for a wide variety of applications.

These connectors can withstand temperatures up to 200 °C – so they can be used directly in machines and facilities that would otherwise require cumbersome and complex constructions.

For our users, this delivers direct advantages:

- The electro-mechanical design process is optimized.
  Machine parts which are exposed to high temperatures can be designed modularly.
- The work process is optimized
  since lower wiring complexity results in reduced maintenance costs.
- The after-sales phase is optimized
  because this more service-friendly approach results in less outages and down times.

Design overview

The basic structure of the Han® High Temp connector consists of a bulkhead mounted housing and a cable-side hood.

Hoods and housings:
The aluminium die-cast hoods and housings feature a highly compressed surface with excellent non-stick properties. It also has a special non-stick coating on the bulkhead-side seal which allows easy handling without significant sticking.

Inserts:
The Han® High Temp series features very rugged contact inserts, which are really the heart of any connector. The LCP injection-moulded insert delivers outstanding temperature resistance coupled with excellent mechanical stability.

Contacts:
Our new temperature resistant contacts, for either screw or crimp terminations, ensure reliable connections with minimal contact resistance even at extreme temperatures.





Han® High Temp connectors
remain robust and reliable for their entire lifespan!

Features

- for extreme temperatures up to 200 °C
- All piece parts (contacts, insert material, hoods and housings, seals and grounding elements) are designed in a temperature resistant way

Technical characteristics

Number of contacts	6, 10, 16, 24
Electrical data acc. to IEC 61984	16 A 500 V 6 kV 3
Rated current	16 A
Rated voltage	500 V
Rated impulse voltage	6 kV
Pollution degree	3
Insulation resistance	≥10^{10} Ω
Contact resistance	≤1 mΩ
Limiting temperature	-40 ... +200 °C With Han® High Temp components
Mating cycles	≥500
Material (insert)	LCP
Material (contacts)	Copper alloy
RoHS	compliant, compliant with exemption
RoHS exemptions	**6c:** Copper alloy containing up to 4 % lead by weight

Derating

Current carrying capacity

The current carrying capacity of the connectors is limited by the thermal load capability of the contact element material including the connections and the insulating parts. The derating curve is therefore valid for currents which flow constantly (non-intermittent) through each contact element of the connector evenly, without exceeding the allowed maximum temperature.

Measuring and testing techniques acc. to IEC 60512-5-2

Crimp termination

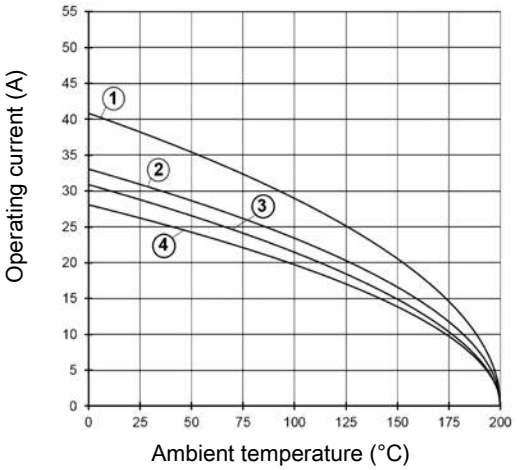

① Han® 6 E High Temp 2,5 mm²
② Han® 10 E High Temp 2,5 mm²
③ Han® 16 E High Temp 2,5 mm²
④ Han® 24 E High Temp 2,5 mm²

Derating

Screw termination

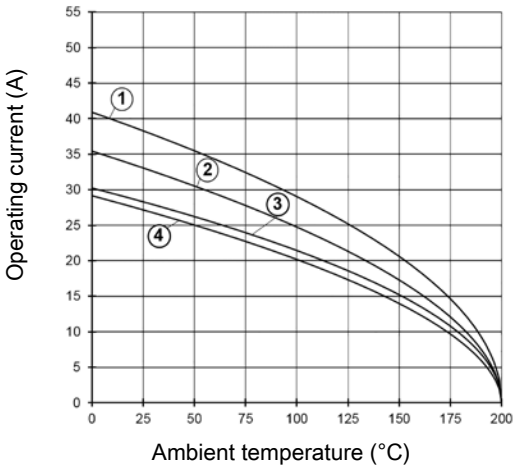

① Han® 6 E High Temp 2.5 mm²
② Han® 10 E High Temp 2.5 mm²
③ Han® 16 E High Temp 2.5 mm²
④ Han® 24 E High Temp 2.5 mm²

Specifications and approvals

EN 60664-1
IEC 61984
UL 1977 ECBT2.E235076
DNV GL

Details

Han® High Temp crimp inserts are only for use with the special Han® High Temp crimp contacts.

Tightening torque 0.5 Nm

Tightening torque PE screw 1.2 Nm

Number of contacts

6+ ⏚

16 A 500 V 6 kV 3

Identification	Conductor cross-section (mm²)	Part number Male	Part number Female	Drawing (dimensions in mm)
Han E® High Temp, Crimp termination  Please order crimp contacts separately.	0,5 ... 2,5	09 33 806 2604	09 33 806 2704	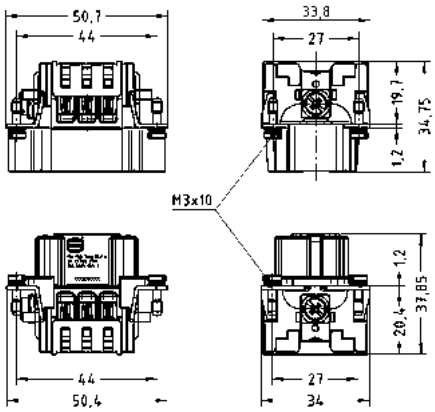
Han E® High Temp, Screw termination, With wire protection, Contact surface: Silver plated 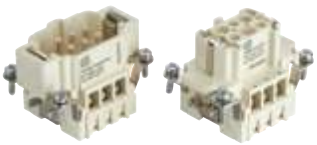	0,75 ... 2,5	09 33 806 2603	09 33 806 2703	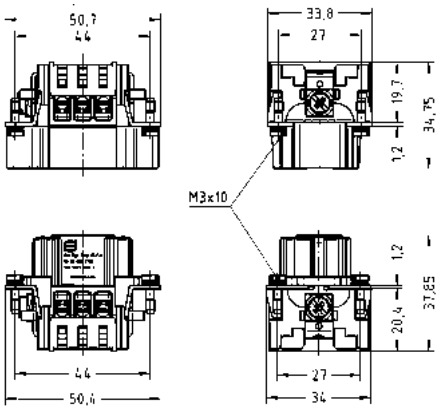

Number of contacts

10+ ⏚

16 A 500 V 6 kV 3

Identification	Conductor cross-section (mm²)	Part number Male	Part number Female	Drawing (dimensions in mm)
Han E® High Temp, Crimp termination 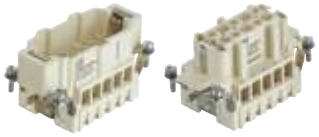 Please order crimp contacts separately.	0,5 ... 2,5	09 33 810 2604	09 33 810 2704	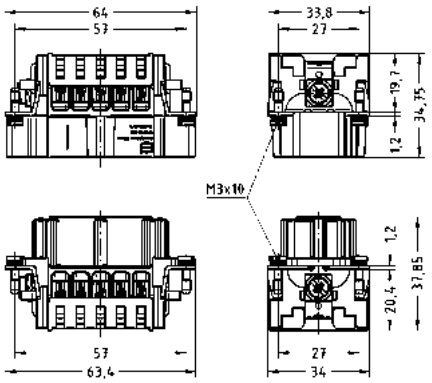
Han E® High Temp, Screw termination, With wire protection, Contact surface: Silver plated 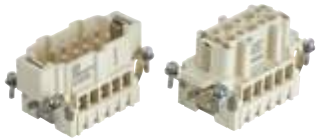	0,75 ... 2,5	09 33 810 2603	09 33 810 2703	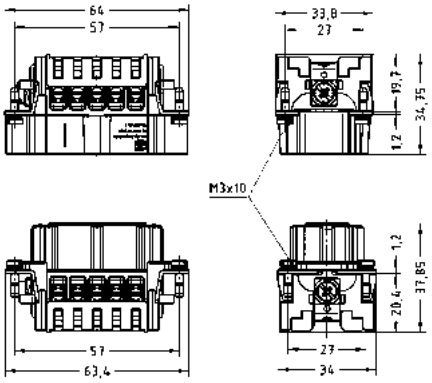

Han® High Temp inserts

Size 16 B

Number of contacts

16+ ⏚

16 A 500 V 6 kV 3

Identification	Conductor cross-section (mm²)	Part number Male	Part number Female	Drawing (dimensions in mm)
Han E® High Temp, Crimp termination 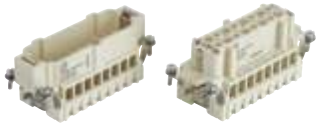 Please order crimp contacts separately.	0,5 ... 2,5	09 33 816 2604	09 33 816 2704	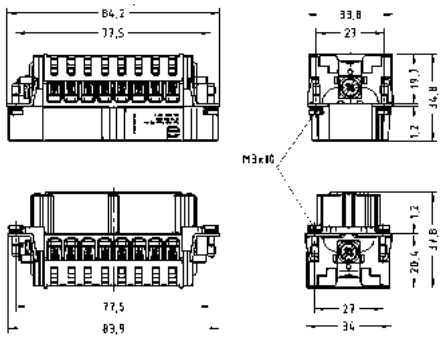
Han E® High Temp, Screw termination, With wire protection, Contact surface: Silver plated 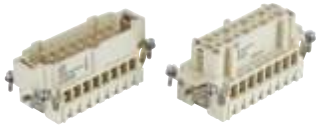	0,75 ... 2,5	09 33 816 2603	09 33 816 2703	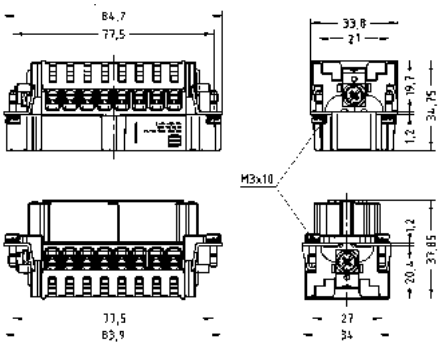

Number of contacts

24+ ⏚

16 A 500 V 6 kV 3

Identification	Conductor cross-section (mm²)	Part number Male	Part number Female	Drawing (dimensions in mm)
Han E® High Temp, Crimp termination  Please order crimp contacts separately.	0,5 ... 2,5	09 33 824 2604	09 33 824 2704	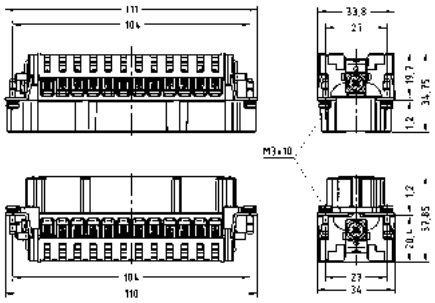
Han E® High Temp, Screw termination, With wire protection, Contact surface: Silver plated 	0,75 ... 2,5	09 33 824 2603	09 33 824 2703	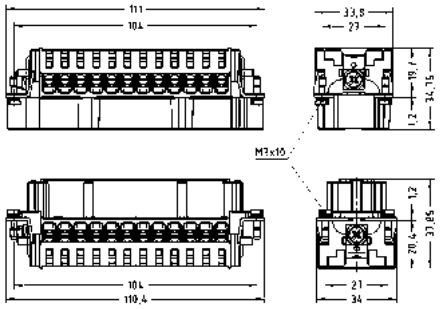

Technical characteristics

Contact resistance	≤1 mΩ
Material (contacts)	Copper alloy
RoHS	compliant with exemption
RoHS exemptions	**6c:** Copper alloy containing up to 4 % lead by weight

Specifications and approvals

EN 60664-1
IEC 61984

Details

Crimping tools see chapter 90

Remarks on the crimp technique
The wire gauges mentioned in the catalogue refer to geometric wire gauges of cables.

Identification	Conductor cross-section (mm²)	Part number Male	Part number Female	Drawing (dimensions in mm)
Han E® High Temp, Crimp contact, Contact surface: Silver plated 	0,5 0,75 1 1,5 2,5	09 33 800 6121 09 33 800 6114 09 33 800 6105 09 33 800 6104 09 33 800 6102	09 33 800 6220 09 33 800 6214 09 33 800 6205 09 33 800 6204 09 33 800 6202	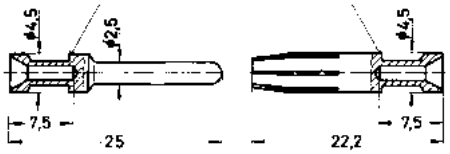

Conductor cross-section		Identification
0.14-0.37 mm²	AWG 26-22	no groove
0.5 mm²	AWG 20	no groove
0.75 mm²	AWG 18	1 groove*
1 mm²	AWG 18	1 groove
1.5 mm²	AWG 16	2 grooves
2.5 mm²	AWG 14	3 grooves
3 mm²	AWG 12	wide groove
4 mm²	AWG 12	no groove
* on the back crimp collar		

Stripping length 7.5 mm

Han® High Temp hoods/housings

Features

- for extreme temperatures up to 200 °C
- All piece parts (contacts, insert material, hoods and housings, seals and grounding elements) are designed in a temperature resistant way
- Hoods/Housings, corrosion resistant metal

Technical characteristics

Limiting temperature	-40 ... +125 °C, -40 ... +200 °C With Han® High Temp components
Degree of protection acc. to IEC 60529	IP65
Type rating acc. to UL 50 / UL 50E	4, 12
Material (hood/housing)	Aluminium die-cast
Surface (hood/housing)	Uncoated
Colour (hood/housing)	Unpainted
Material (seal)	FPM
Colour (seal)	Red
RoHS	compliant

Specifications and approvals

UL 1977 ECBT2.E235076
CSA-C22.2 No. 182.3 ECBT8.E235076
DNV GL

Single locking lever

Identification	Cable entry	Part number Low construction	Part number High construction	Drawing (dimensions in mm)
Han® EMC/B Han® High Temp , Hoods, Top entry 	1x M20 1x M25 1x M32	19 62 806 1440	19 62 806 0446 19 62 806 0447	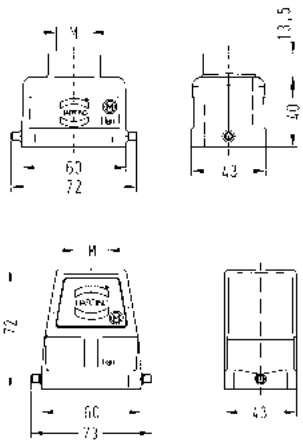
Han® EMC/B Han® High Temp , Hoods, Side entry 	1x M20 1x M25 1x M32	19 62 806 1540	19 62 806 0546 19 62 806 0547	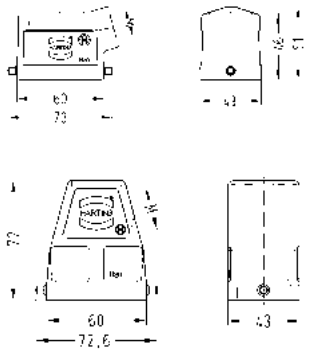
Han® High Temp , Bulkhead mounted housings 		09 62 806 0391		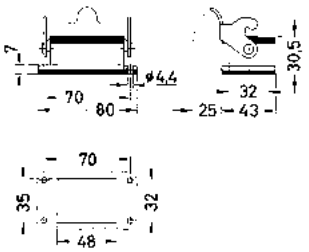 Panel cut out

Double locking lever

Identification	Cable entry	Part number Low construction	Part number High construction	Drawing (dimensions in mm)
Han® EMC/B Han® High Temp , Hoods, Top entry 	1x M20 1x M25 1x M32	19 62 810 1420 19 62 810 1421	19 62 810 0426 19 62 810 0427	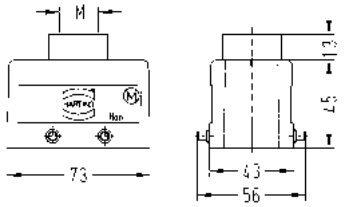 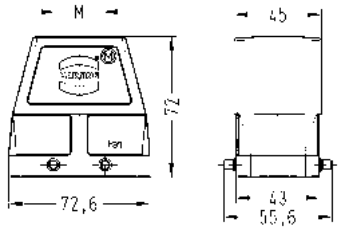
Han® EMC/B Han® High Temp , Hoods, Side entry 	1x M20 1x M25 1x M32	19 62 810 1520	19 62 810 0526 19 62 810 0527	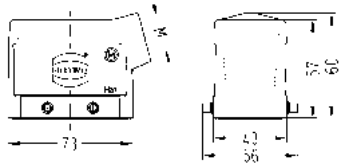 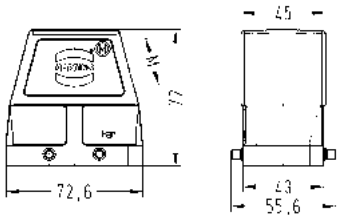
Han® High Temp , Bulkhead mounted housings 		09 62 810 0391		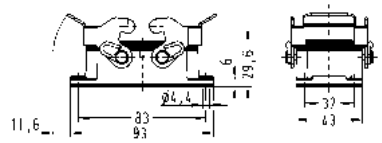 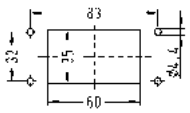 Panel cut out

Han® High Temp hoods/housings — Size 16 B

Double locking lever

Identification	Cable entry	Part number Low construction	Part number High construction	Drawing (dimensions in mm)
Han® EMC/B Han® High Temp , Hoods, Top entry 	1x M25 1x M32 1x M40	19 62 816 1421	19 62 816 0427 19 62 816 0428	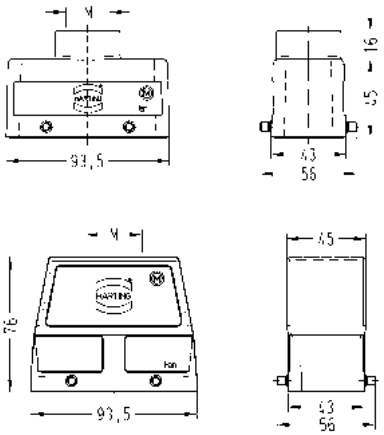
Han® EMC/B Han® High Temp , Hoods, Side entry 	1x M25 1x M32 1x M40	19 62 816 1521	19 62 816 0527 19 62 816 0528	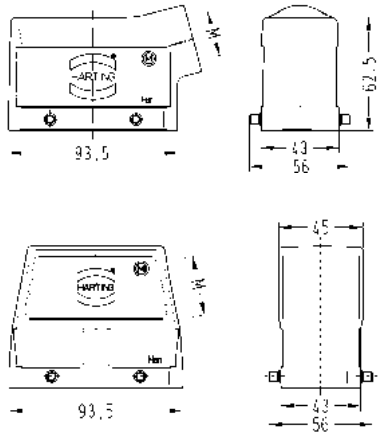
Han® High Temp , Bulkhead mounted housings 		09 62 816 0391		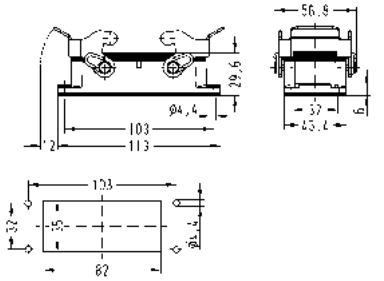 Panel cut out

Double locking lever

Identification	Cable entry	Part number Low construction	Part number High construction	Drawing (dimensions in mm)
Han® EMC/B Han® High Temp , Hoods, Top entry 	1x M32	19 62 824 1422	19 62 824 0427	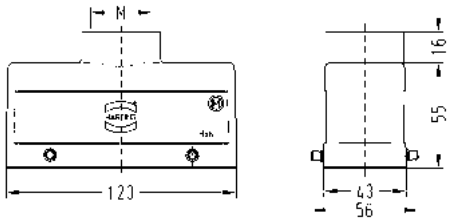 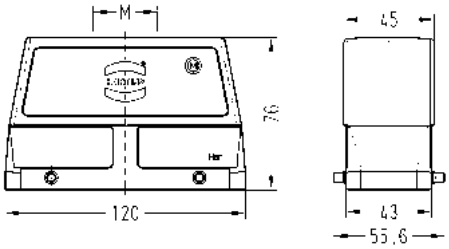
Han® EMC/B Han® High Temp , Hoods, Side entry 	1x M25 1x M32 1x M40	19 62 824 1521	19 62 824 0527 19 62 824 0528	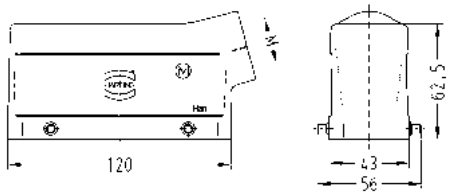 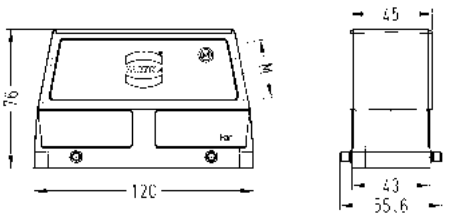
Han® High Temp , Bulkhead mounted housings 		09 62 824 0391		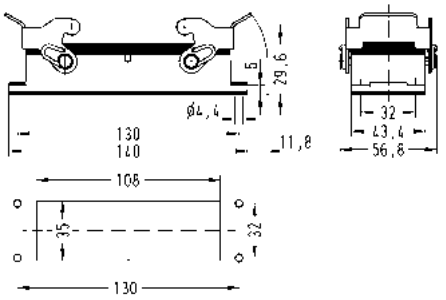 Panel cut out

Han-Brid®

Contents	Page
Han-Brid® Cu	**19.6**
Han-Brid® FO	**19.10**
Han-Brid® Quintax 3 A	**19.13**
Han-Brid® Quintax 3 A with coaxial contacts	**19.15**
Han-Brid® Quintax 3 A with Han-Quintax® contacts	**19.18**
Han-Brid® Quintax 3 A with Han-Quintax® HD contacts	**19.20**
Han-Brid® RJ45 C	**19.21**
Han-Brid® USB	**19.24**
Han-Brid® FireWire	**19.26**
Han® 4 A SC	**19.27**
Hoods/Housings, metal Han® 3 A	**19.30**
Hoods/Housings, thermoplastic Han® 3 A	**19.32**
Han® M hoods/housings	**19.35**
Han® EMC hoods/housings	**19.37**
Han-INOX® hoods/housings	**19.39**
Han® HPR hoods/housings	**19.41**

Data interfaces

Han-Brid® F.O.
- Is suitable for all HP Versatile Link (Horizontal Package) transmitters and receivers
- Data rates: Standard 12 Mbit/s, suitable for all common fieldbus systems
- Insert allows integration of HP standard contacts for POF and HCS®* fibres
- Temperature range -40 °C ... +70 °C

Han-Brid® Cu
- For termination of a shielded twisted pair
- Insert for 2x Han D® male or female contacts
- Connection of the shield by means of shielding plate and fixing clamps
- Connection of the device side can be realized either by a printed circuit board as a modular version or as part of the appliance PCB
- Insert for bulkhead mounted housing or the coupling housing are always equipped with a screening spring

Bus Terminator
- Active bus terminator in male and female version
- Standard Han® 3 A hoods and housings
- Power supply to the termination network via electrical contacts of Han-Brid®
- Integrated, galvanically separated DC/DC converter 24 V / 5 V

Han-Brid® Quintax 3 A
- Possibility to terminate shielded four/eight wires conductors
- Possibility to terminate Coax cable with large diameter
- Suitable for all 4-wire bus systems
- Suitable for shielded cable conductor diameter 3 – 9.5 mm
- Transmission of shielding separately from the hood's ground
- Connections are carried out acc. to DIN EN 50 173, Cat. 5
- Temperature range -40 °C ... +70 °C

Han-Brid® RJ45 C
- Suitable for standard RJ 45 Plug and Jack, shielded version
- Connections provided for conductors acc. to DIN EN 50 173, Cat. 5
- Termination from the device side is carried out via a PCB, two versions are possible: modular version or as part of the appliance PCB
- Assembly with standard tools
- Insert for 2 Han-D® male or female contacts offers the combination with electrical bus connector
- Rated current 10 A
- Rated voltage 24 V
- termination side 0.14 - 2.5 mm²

Han-Brid® USB
- Insert for all Han® 3 A hoods and housings
- Hood with glued sealing
- Simple and low-cost termination via insert of a patch cable
- Strain-relief via cable tie

Han-Brid® FireWire
- Insert for all Han® 3 A hoods and housings
- Hood with glued sealing
- Simple and low-cost termination via insert of a patch cable
- Strain-relief via cable tie
- Compatible to IEEE 1394

Han® 4 A SC
- Suitable with housings, size Han® 3 A including versions Han® M, Han® EMV and Han® HPR
- Degree of protection up to IP 68
- For fibre optic SC contacts; up to 4 SC contacts per connector
- For 1 mm POF
- For Multimode fibre 50 - 62.5 / 125 µm and Single-mode fibre 9 / 125 µm
- Full ceramic sleeves for a minimal insertion loss

* HCS® = Hard Clad Silica (registered trade mark of the SpecTran Corporation)

Overview (Sample: Han-Brid® Cu)

Thermoplastic
09 20 003 0320 (light grey)
09 20 003 0327 (black)

Metal
09 20 003 0301

EMC
09 62 003 0301

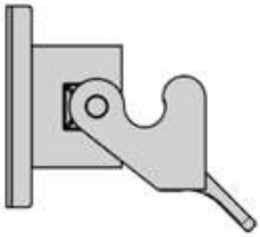

Device side
09 12 006 2611
09 12 006 2695
09 12 006 2694

Cable side
09 12 006 3111



Thermoplastic
19 20 003 0423 (light grey)
19 20 003 0426 (black)

Metal
19 20 003 1443

EMC
19 62 003 1443



Thermoplastic
19 20 003 0720 (light grey)
19 20 003 0727 (black)

Metal
19 20 003 1750

EMC
19 62 003 1750

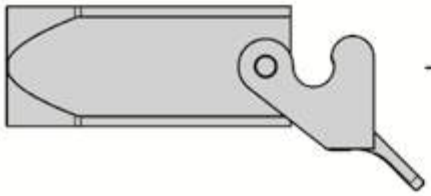

Device side
09 12 006 2701
09 12 006 2795
09 12 006 2794

Cable side
09 12 006 3001

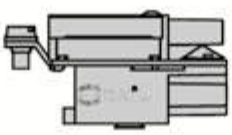

Thermoplastic
19 20 003 0623 (light grey)
19 20 003 0627 (black)

Metal
19 20 003 1643

EMC
19 62 003 1643

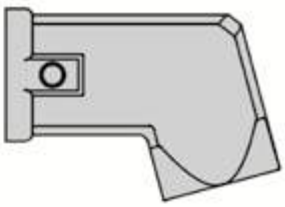

Thermoplastic
19 20 003 0220 (light grey)
19 20 003 0227 (black)

Metal
19 20 003 1250

EMC
19 62 003 1250

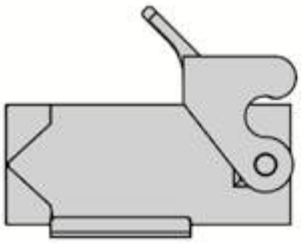

Overview (Sample: Han-Brid® RJ45 C)

Thermoplastic
19 20 003 0423 (light grey)
19 20 003 0427 (black)

Metal
09 20 003 1443

EMC
19 62 003 1443



Thermoplastic
09 20 003 0320 (light grey)
09 20 003 0327 (black)

Metal
09 20 003 0301

EMC
09 62 003 0301

Device side
09 12 003 2770
09 12 003 2774
09 12 003 2776

Cable side
09 12 003 3011
09 12 003 3021
09 12 003 3031

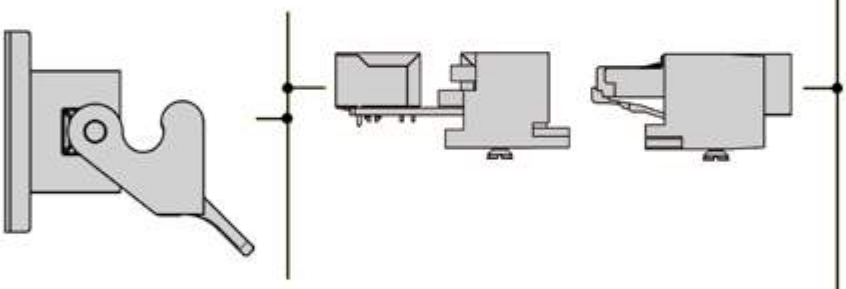

Thermoplastic
19 20 003 0623 (light grey)
19 20 003 0627 (black)

Metal
19 20 003 1643

EMC
19 62 003 1643

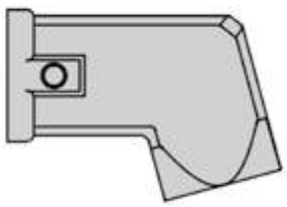

Features

General Description

The Han-Brid® series allows the connection of a data interface and a power supply in a single space saving connector. This means that it is now possible to provide data transmission and power to devices in a single bus structure. This hybrid connector family includes provision for connection of a max. 50 V, 10 A power supply together with a range of inserts for connection of a variety of data protocols and transmission medias:

- Han-Brid® F.O. for plastic (POF) or for HCS®* optical fibre
- Han-Brid® Cu for shielded twisted pair
- Han-Brid® Quintax 3 A for Coax cable with large diameter
- Han-Brid® Quintax 3 A for shielded 4 or 8 wire bus systems
- Han-Brid® RJ45 C for Ethernet application
- Han-Brid® USB / Firewire for fast data transmission

Han-Brid® inserts fit into the standard plastic as well as metal hoods and housings with seal of the Han® 3 A series offering a degree of protection IP 65 according to DIN EN 60 529. For harsher environments Han® 3 HPR hoods and housings with a degree of protection of IP 68 can be used.

Power supply

- Han D® male and female with standard crimp contacts (Order crimp contacts separately)
- Rated current 10 A
- Rated voltage 50 V
- termination side 0.14 - 2.5 mm²
- Approval

Han-Brid® Cu

Features

- for termination of a shielded twisted pair
- Insert for Han D® male or female contacts
- Connection of the shield by means of shielding plate and fixing clamps
- Connection of the device side can be realised either by a printed circuit board as a modular version or as part of the appliance PCB
- Insert for bulkhead mounted or cable to cable housings are always equipped with a screening spring
- Active bus terminator in standard Han® 3 A hoods and housings
- Power supply to the termination network via electrical contacts of Han-Brid®
- Integrated, galvanically separated DC/DC converter 24 V / 5 V

Technical characteristics

Number of contacts	2
Additional contacts	+ 4 electrical contacts 10 A + option for PE
Electrical data acc. to IEC 61984	10 A 50 V 0,8 kV 3
Rated current	10 A
Rated voltage	50 V
Rated impulse voltage	0.8 kV
Pollution degree	3
Insulation resistance	≥10^{10} Ω
Limiting temperature	-40 ... +125 °C
Mating cycles	≥500
Material (insert)	Polycarbonate
Colour (insert)	RAL 7032 (pebble grey)
Material (hood/housing)	Polycarbonate, Zinc die-cast
Colour (hood/housing)	RAL 9005 (jet black), RAL 7037 (dust grey)
Material flammability class acc. to UL 94	V-0
RoHS	compliant with exemption, compliant
RoHS exemptions	**6c:** Copper alloy containing up to 4 % lead by weight

Specifications and approvals

IEC 61984
UL 1977 ECBT2.E235076
CSA-C22.2 No. 182.3 ECBT8.E235076

Number of contacts

2

10 A 50 V 0,8 kV 3
+ 4 electrical contacts 10 A + option for PE



Identification	Part number Male	Part number Female	Drawing (dimensions in mm)
Han-Brid® , Han-Brid® Cu, Hybrid field bus connector  Device side	09 12 006 2611		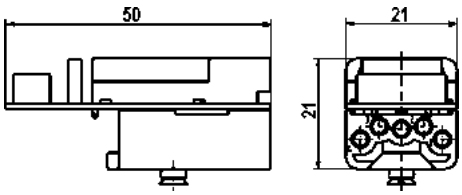 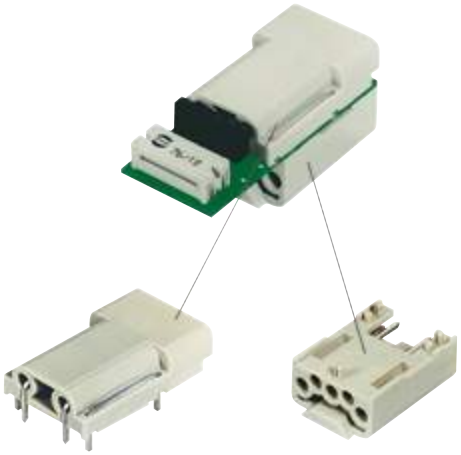 Also available as single parts: 09 12 002 2611 Upper part, loaded 09 12 002 3011 Upper part, unloaded 09 12 004 3011 Lower part, unloaded
Han-Brid® , Han-Brid® Cu, Hybrid field bus connector  Cable side		09 12 006 3111	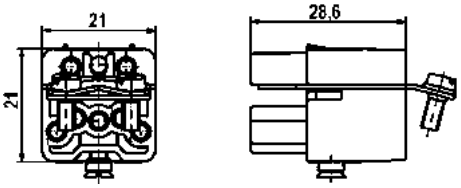 Contact arrangement (view from termination side)

Number of contacts

2

10 A 50 V 0,8 kV 3
+ 4 electrical contacts 10 A + option for PE



Identification	Part number Male	Part number Female	Drawing (dimensions in mm)
Han-Brid® , Han-Brid® Cu, Hybrid field bus connector  Device side		09 12 006 2701	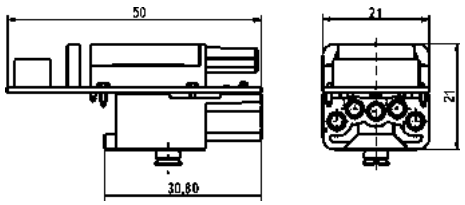  Also available as single parts: 09 12 002 2701 Upper part, loaded 09 12 002 3101 Upper part, unloaded 09 12 004 3101 Lower part, unloaded
Han-Brid® , Han-Brid® Cu, Hybrid field bus connector  Cable side	09 12 006 3001		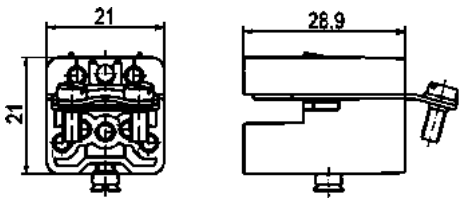

Number of contacts

2

10 A 50 V 0,8 kV 3
+ 4 electrical contacts 10 A + option for PE



Identification	Part number Male	Part number Female	Drawing (dimensions in mm)
Han-Brid® , Han-Brid® Cu, Bus terminator, Plastic hoods/housings 	09 12 006 2691	09 12 006 2791	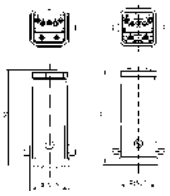
Han-Brid® , Han-Brid® Cu, Bus terminator, Metal hoods / housings 	09 12 006 2692	09 12 006 2792	
Han-Brid® , Han-Brid® Cu, Panel feed through 	09 12 006 2694	09 12 006 2794	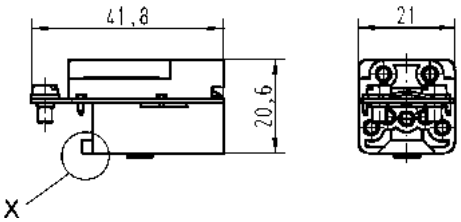 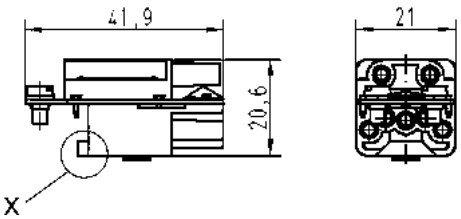 X= Cutting off the fin allows the use in cable to cable housings.
Han-Brid® , Han-Brid® Cu, Panel feed through  With cage clamp	09 12 006 2695	09 12 006 2795	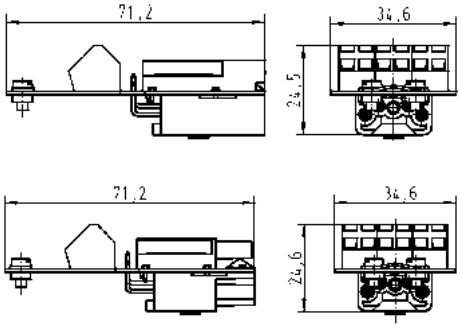

Features

- Is suitable for all HP Versatile Link (Horizontal Package) transmitters and receivers
- Data rates: Standard 12 Mbit/s, suitable for all common fieldbus systems
- Insert allows integration of HP standard contacts for POF and HCS® fibres

Technical characteristics

Number of contacts	2
Additional contacts	+ 4 electrical contacts 10 A + option for PE
Electrical data acc. to IEC 61984	10 A 50 V 0,8 kV 3
Rated current	10 A
Rated voltage	50 V
Rated impulse voltage	0.8 kV
Pollution degree	3
Insulation resistance	≥10^{10} Ω
Limiting temperature	-40 ... +70 °C
Mating cycles	≥500
Material (insert)	Polycarbonate
Colour (insert)	RAL 7032 (pebble grey)
Material flammability class acc. to UL 94	V-0
RoHS	compliant

Specifications and approvals

IEC 61984
UL 1977 ECBT2.E235076
CSA-C22.2 No. 182.3 ECBT8.E235076

Number of contacts

2

10 A 50 V 0,8 kV 3
+ 4 electrical contacts 10 A + option for PE



Identification	Part number Male	Part number Female	Drawing (dimensions in mm)
Han-Brid® , Han-Brid® FO, Hybrid field bus connector  Device side FO (f) + Han D® (m) With PCB	09 12 004 2611		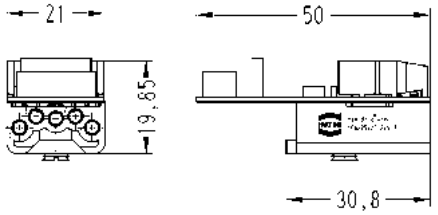 Contact arrangement (view from termination side) Also available as single parts: 09 12 004 3011 Lower part, unloaded
Han-Brid® , Han-Brid® FO, Hybrid field bus connector  Cable side FO (m) + Han D® (f) for POF		09 12 004 2711	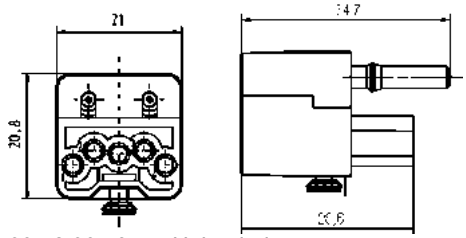 09 12 004 3111 Unloaded
Han-Brid® , Han-Brid® FO, Hybrid field bus connector  Cable side FO (m) + Han D® (f) for POF crimpless		09 12 004 2713	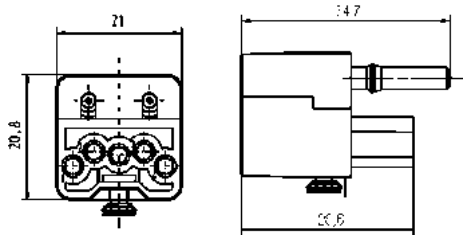 09 12 004 3113 Unloaded
Han-Brid® , Han-Brid® FO, Hybrid field bus connector  Cable side FO (m) + Han D® (f) for HCS® fibre		09 12 004 2716	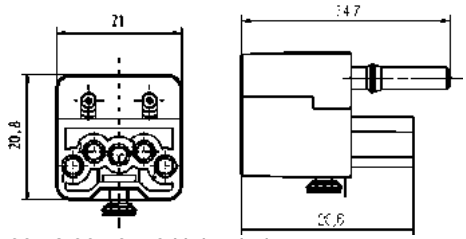 09 12 004 3116 Unloaded

Number of contacts

2

10 A 50 V 0,8 kV 3
+ 4 electrical contacts 10 A + option for PE



Identification	Part number Male	Part number Female	Drawing (dimensions in mm)
Han-Brid® , Han-Brid® FO, Hybrid field bus connector  Device side FO (f) + Han D® (f) With PCB		09 12 004 2701	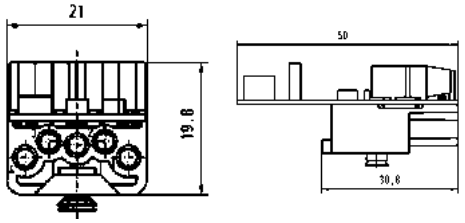 Also available as single parts: 09 12 004 3101 Lower part, unloaded
Han-Brid® , Han-Brid® FO, Hybrid field bus connector  Cable side FO (m) + Han D® (m) for POF	09 12 004 2601		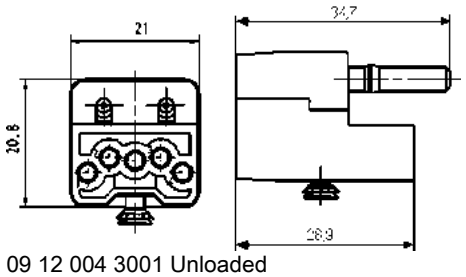 09 12 004 3001 Unloaded
Han-Brid® , Han-Brid® FO, Hybrid field bus connector  Cable side With FO contacts FO (m) + Han D® (m) for POF crimpless	09 12 004 2603		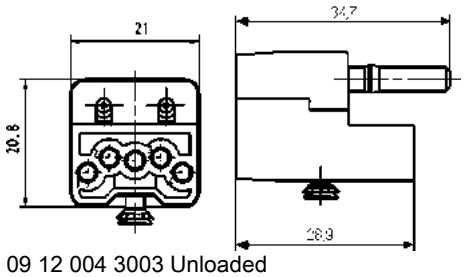 09 12 004 3003 Unloaded
Han-Brid® , Han-Brid® FO, Hybrid field bus connector  Cable side FO (m) + Han D® (m) for HCS® fibre	09 12 004 2606		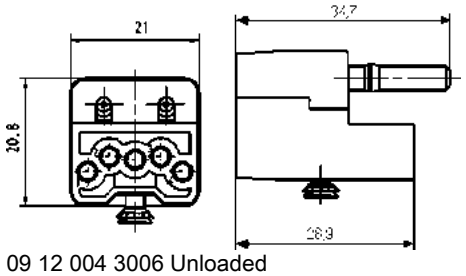 09 12 004 3006 Unloaded

Han-Brid® Quintax 3 A

Features

- Possibility to terminate shielded four/eight wires conductors (2 pair STP)
- Possibility to terminate Coax cable with large diameter
- Suitable for all 4-wire bus systems
- Suitable for shielded cable conductor diameter 3 ... 9.5 mm
- Transmission of shielding separately from the hood's ground
- Connections are carried out acc. to EN 50173, Cat. 5

Technical characteristics

Number of contacts	1, 4, 8
Additional contacts	+ shielding + 2 power contacts
Insulation resistance	≥10^{10} Ω
Contact resistance	≤3 mΩ
Limiting temperature	-40 ... +70 °C
Mating cycles	≥500
Material (insert)	Polycarbonate
Colour (insert)	RAL 7032 (pebble grey)
Material (contacts)	Copper alloy
Material flammability class acc. to UL 94	V-0
RoHS	compliant, compliant with exemption
RoHS exemptions	**6c:** Copper alloy containing up to 4 % lead by weight

Specifications and approvals

EN 60664-1
IEC 61984
UL 1977 ECBT2.E235076
CSA-C22.2 No. 182.3 ECBT8.E235076

Details

ATTENTION! Han-Brid® Quintax in Han® HPR housings only to be used with the long version!

Crimping tools see chapter 90

Remarks on the crimp technique

The wire gauges mentioned in the catalogue refer to geometric wire gauges of cables.

Assembly instructions

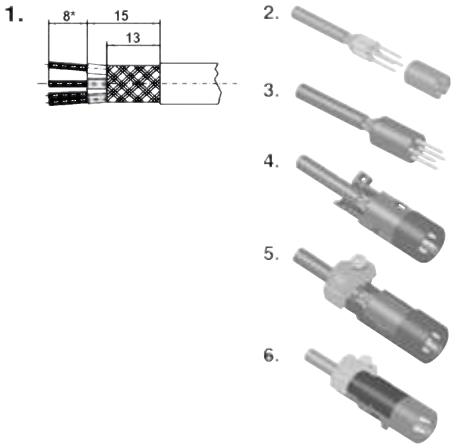

1. Strip cable acc. to drawing 1 and fold the shielding over the cable.
2. Crimp Han D® contacts onto the wires.
3. Insert Han D® contacts into corresponding cavaties of insulator until they are snapped in.
4. Fit the insert including the cable into the opened shielded bushing. The coding pin of the shielded bushing has to meet the groove of the insulator.
5. Clamp the tilt over the shielding onto the cable by means of the special clamp (small opening for cable diameter of 3 ... 6 mm, large opening for cable diameter of 6 ... 9.5 mm).
6. Check the wiring. Close the shielded bushing with the cover and insert it into the corresponding cavity of the Quintax Module as usual.

Han-Brid® Quintax 3 A

Size 3 A

Number of contacts

1,4,8

+ shielding + 2 power contacts



Identification	Conductor cross-section (mm²)	Part number Male	Part number Female	Drawing (dimensions in mm)
Han-Brid® , Han-Brid® Quintax 3 A, Crimp termination  Please order contacts separately.	0,14 ... 2,5	09 15 003 3001	09 15 003 3101	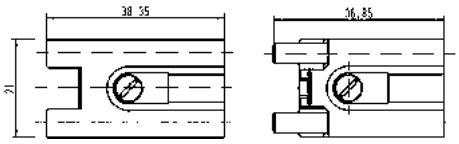
Han D® , Crimp contact, Contact surface: Gold plated 	0,14 ... 0,37 0,5 0,75 1 1,5 2,5	09 15 000 6124 09 15 000 6123 09 15 000 6125 09 15 000 6122 09 15 000 6121 09 15 000 6126	09 15 000 6224 09 15 000 6223 09 15 000 6225 09 15 000 6222 09 15 000 6221 09 15 000 6226	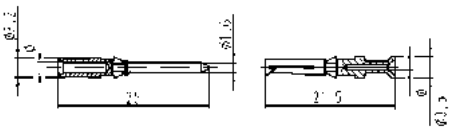 Wire gauge / ⌀ / Stripping length 0.14-0.37 mm² AWG 26-22 — 0.9 mm — 8 mm 0.5 mm² AWG 20 — 1.1 mm — 8 mm 0.75 mm² AWG 18 — 1.3 mm — 8 mm 1 mm² AWG 18 — 1.45 mm — 8 mm 1.5 mm² AWG 16 — 1.75 mm — 8 mm 2.5 mm² AWG 14 — 2.25 mm — 6 mm

Han-Brid® Quintax 3 A with coaxial contacts

Number of contacts

1

10 A 50 V 0,8 kV 3
+ shielding

Technical characteristics

Number of contacts	1
Additional contacts	+ shielding
Electrical data acc. to IEC 61984	10 A 50 V 0,8 kV 3
Rated current	10 A
Rated voltage	50 V
Rated impulse voltage	0.8 kV
Pollution degree	3
Contact resistance	≤3 mΩ
Contact resistance, shielding	≤10 mΩ
Impedance	75 Ω
Limiting temperature	-40 ... +85 °C
Mating cycles	≥500
Material (insert)	Polycarbonate
Material (shielding)	Zinc die-cast, nickel-plated
Colour (insert)	RAL 7032 (pebble grey)
Material (contacts)	Copper alloy
Material flammability class acc. to UL 94	V-0

Technical characteristics

RoHS	compliant, compliant with exemption
RoHS exemptions	**6c:** Copper alloy containing up to 4 % lead by weight

Specifications and approvals

EN 60664-1
IEC 61984

Details

Crimping tools see chapter 90

Remarks on the crimp technique

The wire gauges mentioned in the catalogue refer to geometric wire gauges of cables.

Identification	Conductor cross-section (mm²)	Part number Male	Part number Female	Drawing (dimensions in mm)
Han® D Coax , Crimp termination, for Han D® crimp contacts  Please order crimp contacts separately.	0,14 ... 2,5	09 15 001 3013	09 15 001 3113	M F 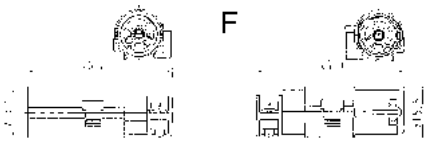 RF transmission characteristics 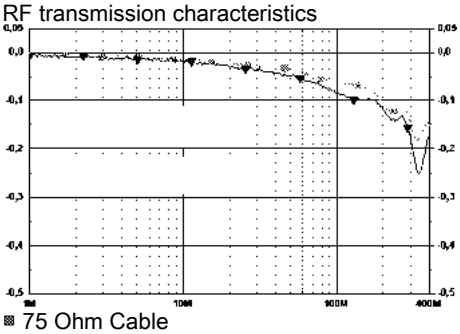 ▩ 75 Ohm Cable ▾ 75 Ohm Cable with Han D® Coax

Han-Brid® Quintax 3 A with coaxial contacts

Identification	Conductor cross-section (mm²)	Part number Male	Part number Female	Drawing (dimensions in mm)
Han D® , Crimp contact, Contact surface: Gold plated 	0,14 ... 0,37 0,5 0,75 1 1,5 2,5	09 15 000 6124 09 15 000 6123 09 15 000 6125 09 15 000 6122 09 15 000 6121 09 15 000 6126	09 15 000 6224 09 15 000 6223 09 15 000 6225 09 15 000 6222 09 15 000 6221 09 15 000 6226	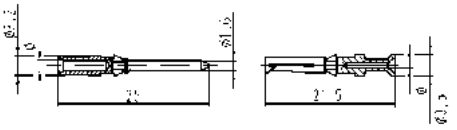

Wire gauge		⌀	Stripping length
0.14-0.37 mm²	AWG 26-22	0.9 mm	8 mm
0.5 mm²	AWG 20	1.1 mm	8 mm
0.75 mm²	AWG 18	1.3 mm	8 mm
1 mm²	AWG 18	1.45 mm	8 mm
1.5 mm²	AWG 16	1.75 mm	8 mm
2.5 mm²	AWG 14	2.25 mm	6 mm

Han-Brid® Quintax 3 A with coaxial contacts

Number of contacts

1

16 A 50 V 0,8 kV 3
+ shielding

Technical characteristics

Number of contacts	1
Additional contacts	+ shielding
Electrical data acc. to IEC 61984	16 A 50 V 0,8 kV 3
Rated current	16 A
Rated voltage	50 V
Rated impulse voltage	0.8 kV
Pollution degree	3
Contact resistance	≤1 mΩ
Contact resistance, shielding	≤10 mΩ
Impedance	50 Ω
Limiting temperature	-40 ... +85 °C
Mating cycles	≥500
Material (insert)	Polycarbonate
Material (shielding)	Zinc die-cast, nickel-plated
Colour (insert)	RAL 7032 (pebble grey)
Material (contacts)	Copper alloy
Material flammability class acc. to UL 94	V-0

Technical characteristics

RoHS	compliant, compliant with exemption
RoHS exemptions	**6c:** Copper alloy containing up to 4 % lead by weight

Specifications and approvals

EN 60664-1
IEC 61984

Details

Crimping tools see chapter 90

Remarks on the crimp technique

The wire gauges mentioned in the catalogue refer to geometric wire gauges of cables.

Identification	Conductor cross-section (mm²)	Part number Male	Part number Female	Drawing (dimensions in mm)
Han® E Coax , Crimp termination, for Han E® crimp contacts  Please order crimp contacts separately.	0,14 ... 4	09 15 001 3023	09 15 001 3123	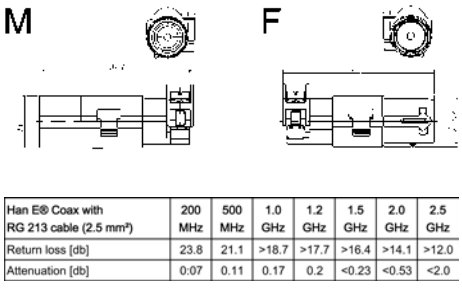 Han E® Coax with RG 213 cable (2.5 mm²): 200 MHz: Return loss [db] 23.8, Attenuation [db] 0:07; 500 MHz: 21.1, 0.11; 1.0 GHz: >18.7, 0.17; 1.2 GHz: >17.7, 0.2; 1.5 GHz: >16.4, <0.23; 2.0 GHz: >14.1, <0.53; 2.5 GHz: >12.0, <2.0
Han E® , Crimp contact, Contact surface: Gold plated 	0,14 ... 0,37 0,5 0,75 1 1,5 2,5 4	09 33 000 6117 09 33 000 6122 09 33 000 6115 09 33 000 6118 09 33 000 6116 09 33 000 6123 09 33 000 6119	09 33 000 6217 09 33 000 6222 09 33 000 6215 09 33 000 6218 09 33 000 6216 09 33 000 6223 09 33 000 6221	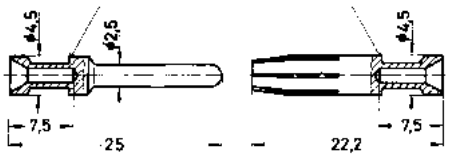 Conductor cross-section / Identification 0.14-0.37 mm² AWG 26-22 — no groove 0.5 mm² AWG 20 — no groove 0.75 mm² AWG 18 — 1 groove* 1 mm² AWG 18 — 1 groove 1.5 mm² AWG 16 — 2 grooves 2.5 mm² AWG 14 — 3 grooves 3 mm² AWG 12 — wide groove 4 mm² AWG 12 — no groove * on the back crimp collar Stripping length 7.5 mm

Han-Brid® Quintax 3 A with Han-Quintax® contacts

Number of contacts

4

10 A 50 V 0,8 kV 3
+ shielding

Features

- Shielding bus separate from housing potential
- Suitable for the transmission of sensitive signals (e.g. bus signals)
- The four pole Han® Quintax contact is suitable for Ethernet cat. 5e and PROFIBUS when diagonally wiring of the data pairs.

Technical characteristics

Number of contacts	4
Additional contacts	+ shielding
Electrical data acc. to IEC 61984	10 A 50 V 0,8 kV 3
Rated current	10 A
Rated voltage	50 V
Rated impulse voltage	0.8 kV
Pollution degree	3
Contact resistance	≤3 mΩ
Contact resistance, shielding	≤10 mΩ
Limiting temperature	-40 ... +85 °C
Mating cycles	≥500
Material (insert)	Polycarbonate
Material (shielding)	Zinc die-cast, nickel-plated
Colour (insert)	RAL 7032 (pebble grey)
Material (contacts)	Copper alloy
Material flammability class acc. to UL 94	V-0
RoHS	compliant, compliant with exemption
RoHS exemptions	**6c:** Copper alloy containing up to 4 % lead by weight

Specifications and approvals

EN 60664-1
IEC 61984
UL 1977 ECBT2.E102079
CSA-C22.2 No. 182.3 ECBT8.E102079

Details

Crimping tools see chapter 90

Remarks on the crimp technique

The wire gauges mentioned in the catalogue refer to geometric wire gauges of cables.

Identification	Conductor cross-section (mm²)	Part number Male	Part number Female	Drawing (dimensions in mm)
Han-Quintax® , for Han D® crimp contacts  Please order crimp contacts separately.	0,14 ... 2,5	09 15 004 3013	09 15 004 3113	M 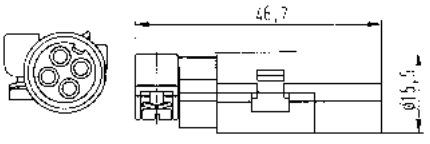 F 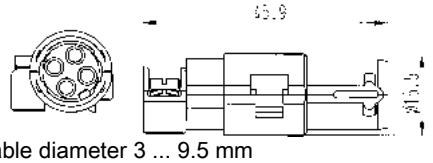 Cable diameter 3 ... 9.5 mm

Han-Brid® Quintax 3 A with Han-Quintax® contacts

Identification	Conductor cross-section (mm²)	Part number Male	Part number Female	Drawing (dimensions in mm)
Han D® , Crimp contact, Contact surface: Gold plated 	0,14 ... 0,37 0,5 0,75 1 1,5 2,5	09 15 000 6124 09 15 000 6123 09 15 000 6125 09 15 000 6122 09 15 000 6121 09 15 000 6126	09 15 000 6224 09 15 000 6223 09 15 000 6225 09 15 000 6222 09 15 000 6221 09 15 000 6226	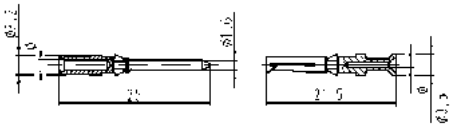

Wire gauge		∅	Stripping length
0.14-0.37 mm²	AWG 26-22	0.9 mm	8 mm
0.5 mm²	AWG 20	1.1 mm	8 mm
0.75 mm²	AWG 18	1.3 mm	8 mm
1 mm²	AWG 18	1.45 mm	8 mm
1.5 mm²	AWG 16	1.75 mm	8 mm
2.5 mm²	AWG 14	2.25 mm	6 mm

Han-Brid® Quintax 3 A with Han-Quintax® HD contacts

Number of contacts

8

5 A 50 V 0,8 kV 3
+ shielding

Technical characteristics

Number of contacts	8
Additional contacts	+ shielding
Electrical data acc. to IEC 61984	5 A 50 V 0,8 kV 3
Rated current	5 A
Rated voltage	50 V
Rated impulse voltage	0.8 kV
Pollution degree	3
Contact resistance	≤10 mΩ
Contact resistance, shielding	≤10 mΩ
Limiting temperature	-40 ... +85 °C
Mating cycles	≥500
Material (insert)	Polycarbonate
Material (shielding)	Zinc die-cast, nickel-plated
Colour (insert)	RAL 7032 (pebble grey)

Technical characteristics

Material (contacts)	Copper alloy
Material flammability class acc. to UL 94	V-0
RoHS	compliant, compliant with exemption
RoHS exemptions	**6c:** Copper alloy containing up to 4 % lead by weight

Specifications and approvals

EN 60664-1
IEC 61984
UL 1977 ECBT2.E102079
CSA-C22.2 No. 182.3 ECBT8.E102079

Identification	Conductor cross-section (mm²)	Part number Male	Part number Female	Drawing (dimensions in mm)
Han-Quintax® High Density , for Han® D-Sub crimp contacts  Please order crimp contacts separately.	0,09 ... 0,52	09 15 008 3013	09 15 008 3113	M F 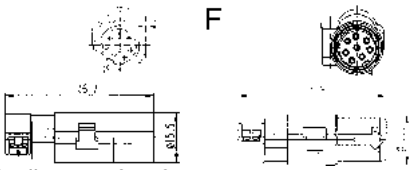 Cable diameter 3 ... 9.5 mm
D-Sub , Standard, Crimp contact, Turned , Pack contents: Single contact 	0,09 ... 0,25 0,13 ... 0,33 0,25 ... 0,52	09 67 000 7576 09 67 000 5576 09 67 000 8576	09 67 000 7476 09 67 000 5476 09 67 000 8476	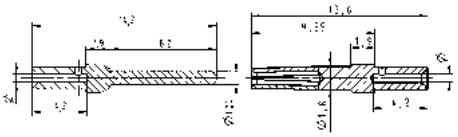 Wire gauge / ø / Stripping length: 0.09-0.25 mm² / 0.64 mm / 4 mm; 0.13-0.33 mm² / 0.88 mm / 4 mm; 0.25-0.52 mm² / 1.13 mm / 4 mm; 0.33-0.82 mm² / 1.34 mm / 4 mm. for stranded wire according IEC 60228 Class 5

Han-Brid® RJ45 C

Features

- Suitable for standard RJ 45 Plug and Jack, shielded version
- Connections are carried out acc. to EN 50173, Cat. 5
- Connection of the device side can be realised either by a printed circuit board as a modular version or as part of the appliance PCB
- Assembly with standard tools
- Insert for 2 Han-D® male or female contacts offers the combination with electrical bus connector

Technical characteristics

Number of contacts	2
Additional contacts	+ RJ45
Electrical data acc. to IEC 61984	10 A 24 V 0,8 kV 3
Rated current	10 A
Rated voltage	24 V
Rated impulse voltage	0.8 kV
Pollution degree	3
Insulation resistance	≥10^{10} Ω
Limiting temperature	-40 ... +125 °C
Mating cycles	≥500
Material (insert)	Polycarbonate
Colour (insert)	RAL 7032 (pebble grey)
Material flammability class acc. to UL 94	V-0
RoHS	compliant

Specifications and approvals

IEC 61984
UL 1977 ECBT2.E235076
CSA-C22.2 No. 182.3 ECBT8.E235076
DNV GL

Han-Brid® RJ45 C

Size 3 A

Number of contacts

2

10 A 24 V 0,8 kV 3
+ RJ45

Identification	Part number Male	Part number Female	Drawing (dimensions in mm)
Han-Brid® , Han-Brid® RJ45 C, hybrid network connector  With RJ Industrial	09 12 003 3011		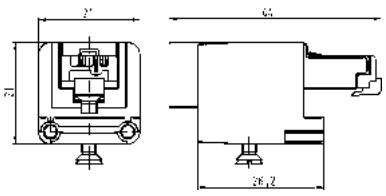
Han-Brid® , Han-Brid® RJ45 C, hybrid network connector, 10 Gbit/s  With RJ Industrial	09 12 003 3015		
Han-Brid® , Han-Brid® RJ45 C, hybrid network connector, Cat. 6_A  With RJ Industrial	09 12 003 3016		
Han-Brid® , Han-Brid® RJ45 C, hybrid network connector  With Stewart RJ45	09 12 003 3021		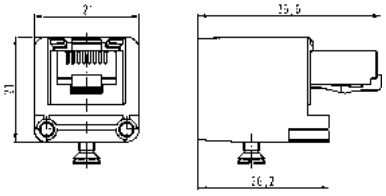
Han-Brid® , Han-Brid® RJ45 C, hybrid network connector  With HIROSE RJ45	09 12 003 3031		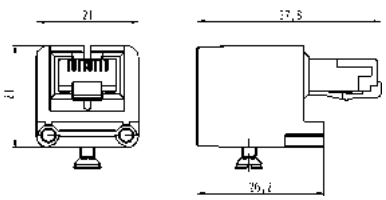

Identification	Part number Male	Part number Female	Drawing (dimensions in mm)
Han-Brid® , Han-Brid® RJ45 C, hybrid network connector  Panel feed through With 4-pin terminal block		09 12 003 2770	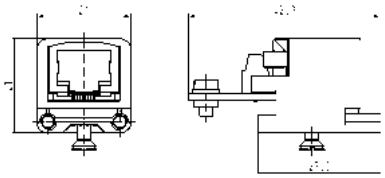
Han-Brid® , Han-Brid® RJ45 C, hybrid network connector  Panel feed through Straight		09 12 003 2774	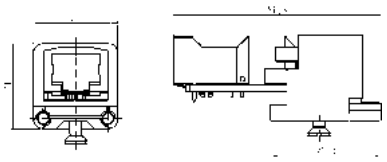
Han-Brid® , Han-Brid® RJ45 C, hybrid network connector  Panel feed through Angled		09 12 003 2776	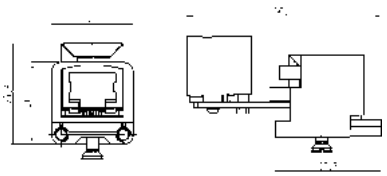

Number of contacts

2

1 A 50 V 0,8 kV 3
+ USB

Features

- Insert for all Han® 3 A hoods with glued seal
- Simple and cost effective termination by plug in patch cable
- Cable tie strain relief

Technical characteristics

Number of contacts	2
Additional contacts	+ USB
Electrical data acc. to IEC 61984	1 A 50 V 0,8 kV 3
Rated current	1 A
Rated voltage	50 V
Rated impulse voltage	0.8 kV
Pollution degree	3
Insulation resistance	≥10^{10} Ω
Contact resistance	≥4 mΩ
Limiting temperature	-40 ... +85 °C
Mating cycles	≥500
Material (insert)	Polycarbonate
Colour (insert)	RAL 7032 (pebble grey)
Material flammability class acc. to UL 94	V-0
RoHS	compliant

Specifications and approvals

EN 60664-1
IEC 61984
UL 1977 ECBT2.E235076
CSA-C22.2 No. 182.3 ECBT8.E235076

Identification	Part number Male	Part number Female	Drawing (dimensions in mm)
Han-Brid® , Han-Brid® USB, USB 3.0  Device side	09 12 001 2793		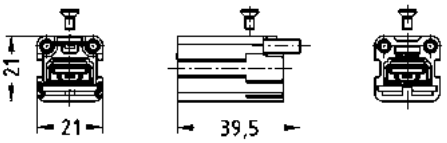
Han-Brid® , Han-Brid® USB, USB 2.0  Device side	09 12 001 2794		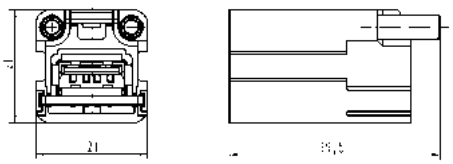

Identification	Part number Male	Part number Female	Drawing (dimensions in mm)
Han-Brid® , Han-Brid® USB  Cable side		09 12 001 3091	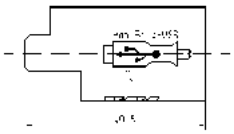 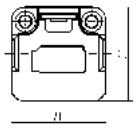

Number of contacts

2

1 A 50 V 0,8 kV 3
+ FireWire

Features

- Insert for all Han® 3 A hoods with glued seal
- Simple and cost effective termination by plug in patch cable
- Cable tie strain relief
- Compatibel to IEEE 1394

Technical characteristics

Number of contacts	2
Additional contacts	+ FireWire
Electrical data acc. to IEC 61984	1 A 50 V 0,8 kV 3
Rated current	1 A
Rated voltage	50 V
Rated impulse voltage	0.8 kV
Pollution degree	3
Insulation resistance	≥10^{10} Ω
Contact resistance	≥4 mΩ
Limiting temperature	-40 ... +85 °C
Mating cycles	≥500
Material (insert)	Polycarbonate
Colour (insert)	RAL 7032 (pebble grey)
Material flammability class acc. to UL 94	V-0
RoHS	compliant

Specifications and approvals

EN 60664-1
IEC 61984
UL 1977 ECBT2.E235076
CSA-C22.2 No. 182.3 ECBT8.E235076

Identification	Part number Male	Part number Female	Drawing (dimensions in mm)
Han-Brid® , Han-Brid® FireWire  Device side	09 12 001 2774		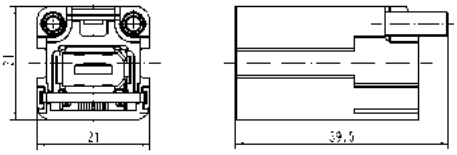
Han-Brid® , Han-Brid® FireWire  Cable side		09 12 001 3071	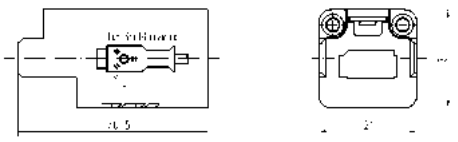

Features

- Suitable for housings, size Han® 3 A including versions Han® M, Han® EMC and Han® HPR
- Degree of protection up to IP68
- Suitable for HARTING SC contacts
- for Multimode fibre 50 - 62.5 / 125 µm and Singlemode fibre 9 / 125 µm
- 4 full ceramic sleeves for a minimal insertion loss
- 1 mm POF

Technical characteristics

Number of contacts	4
Insulation resistance	≥10^{10} Ω
Limiting temperature	-40 ... +85 °C
Mating cycles	≥500
Material (insert)	Polycarbonate
Colour (insert)	RAL 7032 (pebble grey)
Material flammability class acc. to UL 94	V-0
RoHS	compliant with exemption, compliant
RoHS exemptions	**6c:** Copper alloy containing up to 4 % lead by weight

Specifications and approvals

UL 1977 ECBT2.E235076
CSA-C22.2 No. 182.3 ECBT8.E235076

Details

Assembly instructions

Male module

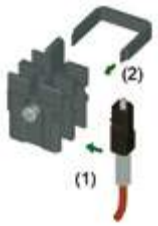

Assemble the SC contact
① Push the SC contact from the side into the relevant insert
② Push the spring clip over the contact body.

Assembly instructions

Female module



Assemble the SC contact
① Push the centering ferrule (included in delivery) on the SC contact
② Push the SC contact from the side into the relevant insert
③ Push the spring clip over the contact body.

Number of contacts

4



Identification	Part number Male	Part number Female	Drawing (dimensions in mm)
Han-Brid® , Han® 4 A SC, for FO  Please order contacts separately.	09 20 004 4701	09 20 004 4711	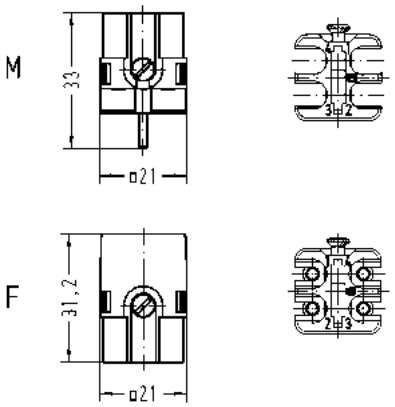 Contact arrangement (view from termination side) The female inserts are equipped with centering ferrules. 4 ferrules are included within the delivery.
SC contact, for 1 mm plastic fibre Crimp termination 	20 10 001 5211		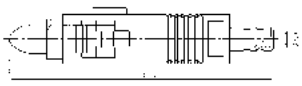
SC contact, for 1 mm plastic fibre Fast termination 	20 10 001 5217		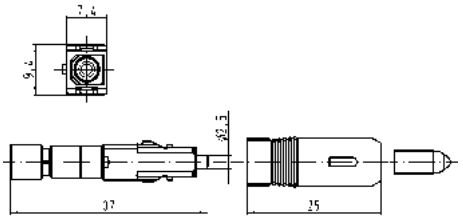
SC contact, for singlemode fibre 9/125 µm 	20 10 125 5220		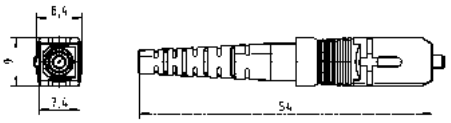

Identification	Part number Male	Part number Female	Drawing (dimensions in mm)
SC contact, for GI fibre 50/125 µm for ceramic ferrule 62.5/125 µm 	20 10 125 5211		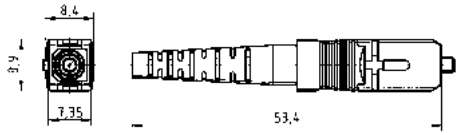
SC contact, for SI fibre (HCS®) 200/230 µm	20 10 230 5211		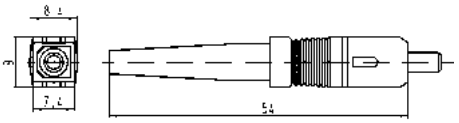

Features

- Hoods/housings for industrial applications
- With glued seal

Technical characteristics

Limiting temperature	-40 ... +125 °C
Degree of protection acc. to IEC 60529	IP44, IP65 / IP67, with seal screw 09 20 000 9918
Material (hood/housing)	Zinc die-cast
Surface (hood/housing)	Powder-coated
Colour (hood/housing)	RAL 7037 (dust grey)
Material (seal)	NBR
RoHS	compliant with exemption, compliant
RoHS exemptions	**6c:** Copper alloy containing up to 4 % lead by weight

Specifications and approvals

DNV GL

Details

The special hoods with glued seal can be combined with standard housings (see chapter 31).

Standard Hoods/housings for industrial applications
Single locking lever

Identification	Cable entry	Cable diameter (mm)	Part number	Drawing (dimensions in mm)
Han A® , Hoods, for Han-Brid®, With glued seal, With integrated cable gland, Top entry 	1x Integrated 1x Integrated	5 ... 13 6 ... 12	19 20 003 1423 19 20 003 1425	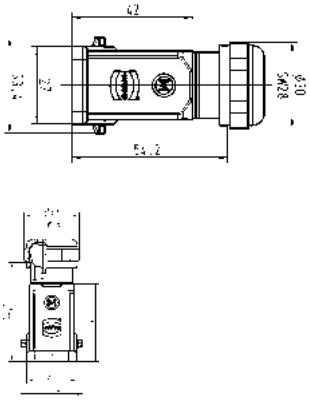
Han A® , Hoods, for Han-Brid®, With glued seal, Top entry 	1x M20 1x M25		19 20 003 1443 19 20 003 1447	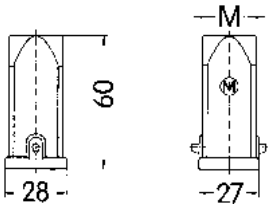
Han A® , Hoods, for Han-Brid®, With glued seal, Side entry 	1x M20		19 20 003 1643	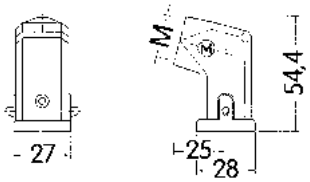

Hoods/Housings, thermoplastic Han® 3 A

Features

- Hoods/housings for industrial applications
- With glued seal

Technical characteristics

Limiting temperature	-40 ... +125 °C
Degree of protection acc. to IEC 60529	IP44, IP67, with seal screw 09 20 000 9918
Type rating acc. to UL 50 / UL 50E	4, 4X, 12
Material (hood/housing)	Polycarbonate
Colour (hood/housing)	RAL 7032 (pebble grey), RAL 9005 (jet black)
Material (seal)	NBR
Material flammability class acc. to UL 94	V-0
RoHS	compliant

Specifications and approvals

UL 1977 ECBT2.E235076
CSA-C22.2 No. 182.3 ECBT8.E235076
DNV GL

Details

The special hoods with glued seal can be combined with standard housings (see chapter 31).

Standard Hoods/housings for industrial applications
Single locking lever

Identification	Cable entry	Cable diameter (mm)	Part number	Drawing (dimensions in mm)
Han A® , Hoods, With glued seal, With integrated cable gland, Top entry 	1x Integrated	9 ... 17	19 20 003 0413	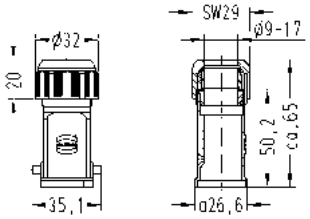
Han A® , Hoods, With glued seal, With integrated cable gland, Black, Top entry	1x Integrated	9 ... 17	19 20 003 0418	
Han A® , Hoods, for Han-Brid®, With glued seal, Top entry 	1x M20		19 20 003 0423	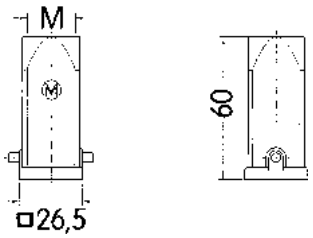
Han A® , Hoods, for Han-Brid®, With glued seal, Black, Top entry 	1x M20 1x M25		19 20 003 0426 19 20 003 0436	
Han A® , Hoods, With glued seal, Top entry 	1x M25		19 20 003 0433	

Identification	Cable entry	Cable diameter (mm)	Part number	Drawing (dimensions in mm)
Han A® , Hoods, for Han-Brid®, With glued seal, Side entry 	1x M20		19 20 003 0623	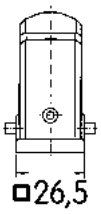 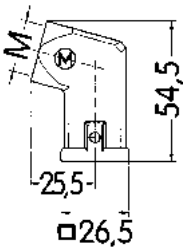
Han A® , Hoods, for Han-Brid®, With glued seal, Black, Side entry 	1x M20		19 20 003 0626	

Features

- Hoods/housings for rough environments
- Corrosion resistance ASTM B117-09 (500 h)
- With glued seal

Technical characteristics

Limiting temperature	-40 ... +125 °C
Degree of protection acc. to IEC 60529	IP44, IP65 / IP67, with seal screw 09 20 000 9918
Material (hood/housing)	Zinc die-cast
Surface (hood/housing)	Powder-coated
Colour (hood/housing)	RAL 9005 (jet black)
Material (seal)	FPM
RoHS	compliant

Specifications and approvals

DNV GL

Details

The special hoods with glued seal can be combined with standard housings (see chapter 31).

Hoods/housings for rough environments
Single locking lever

Identification	Cable entry	Part number	Drawing (dimensions in mm)
Han® M , Hoods, With glued seal, Top entry 	1x M20	19 37 003 1443	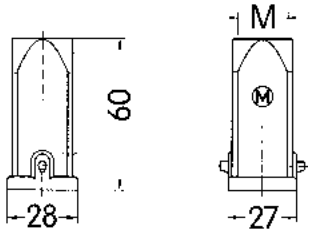
Han® M , Hoods, With glued seal, Side entry 	1x M20	19 37 003 1643	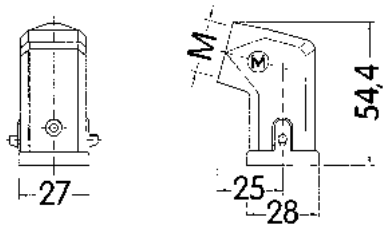

Han® EMC hoods/housings

Features

- Hoods/Housings for higher EMC requirements
- With glued seal

Technical characteristics

Limiting temperature	-40 ... +125 °C
Degree of protection acc. to IEC 60529	IP44, IP65 / IP67, with seal screw 09 20 000 9918
Material (hood/housing)	Zinc die-cast
Surface (hood/housing)	Uncoated
Colour (hood/housing)	Unpainted
Material (seal)	NBR
RoHS	compliant

Specifications and approvals

DNV GL

Details

The special hoods with glued seal can be combined with standard housings (see chapter 31).

Han® EMC hoods/housings

Size 3 A

Hoods/Housings for higher EMC requirements
Single locking lever

Identification	Cable entry	Part number	Drawing (dimensions in mm)
Han® EMC , Hoods, With glued seal, Top entry 	1x M20	19 62 003 1443	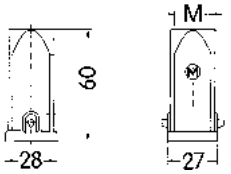
Han® EMC , Hoods, With glued seal, Side entry 	1x M20	19 62 003 1643	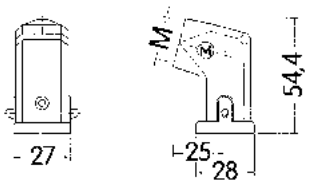

Features

- Hoods/housings for harsh environments
- Extremely resistant to chemicals and other aggressive influences
- Made completely from high-quality stainless steel
- Extremely resistant to corrosion
- With glued seal

Technical characteristics

Limiting temperature	-40 ... +125 °C
Degree of protection acc. to IEC 60529	IP67
Type rating acc. to UL 50 / UL 50E	4, 4X, 12
Material (hood/housing)	Stainless steel
Surface (hood/housing)	Uncoated
Colour (hood/housing)	Unpainted
Material (seal)	NBR
RoHS	compliant

Specifications and approvals

UL 1977 ECBT2.E235076
CSA-C22.2 No. 182.3 ECBT8.E235076
DNV GL

Details

The special hoods with glued seal can be combined with standard housings (see chapter 31).

Hoods/housings for harsh environments
Single locking lever

Identification	Cable entry	Part number	Drawing (dimensions in mm)
Han-INOX® , Hoods, With glued seal, Top entry 	1x M20	19 44 003 1443	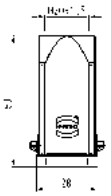
Han-INOX® , Hoods, With glued seal, Side entry 	1x M20	19 44 003 1643	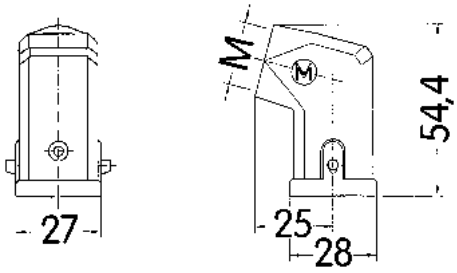

Han® HPR hoods/housings

Features

- Hoods/housings for harsh outdoor environments
- Metal hoods and housings with excellent corrosion resistance
- Corrosion resistance ASTM B117-09 (500 h)
- Excellent EMC characteristics
- Screw locking M4
- Field of application: for external electrical interconnections in vehicles, in highly demanding environments and wet areas, as well as for sensitive interconnections that have to be shielded
- Distinguishing feature: colour-coded black, internal seal

Technical characteristics

Limiting temperature	-40 ... +125 °C
Tightening torque (screw locking)	2 Nm
Degree of protection acc. to IEC 60529	IP65, IP68, IP69 / IPX9K acc. to ISO 20653
Type rating acc. to UL 50 / UL 50E	4, 4X, 12
Material (hood/housing)	Zinc die-cast
Surface (hood/housing)	Powder-coated, Chromated
Colour (hood/housing)	RAL 9005 (jet black)
Material (locking)	Stainless steel
RoHS	compliant

Specifications and approvals

UL 1977 ECBT2.E235076
CSA-C22.2 No. 182.3 ECBT8.E235076
DNV GL

Hoods/housings for harsh outdoor environments
Toggle locking

Identification	Cable entry	Part number	Drawing (dimensions in mm)
Han® HPR , Hoods, Top entry, Pack contents: With seal screw 	1x M20 1x M25	19 40 703 0400 19 40 703 0401	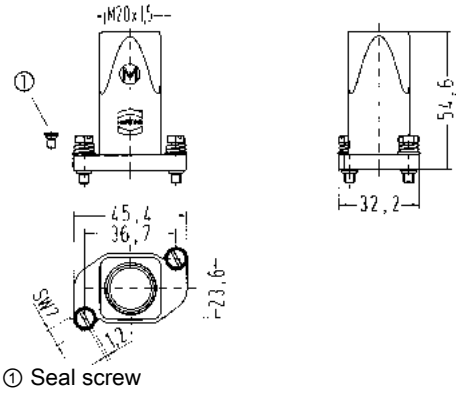 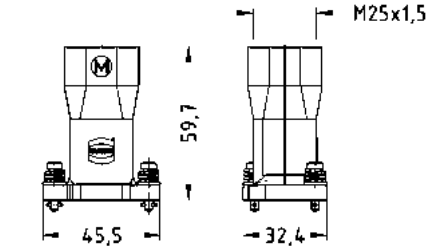 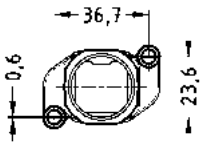

Hoods/housings for harsh outdoor environments
Screw locking

Identification	Cable entry	Part number	Drawing (dimensions in mm)
Han® HPR , Hoods, Top entry, Pack contents: With seal screw 	1x M20 1x M25	19 40 703 0410 19 40 703 0411	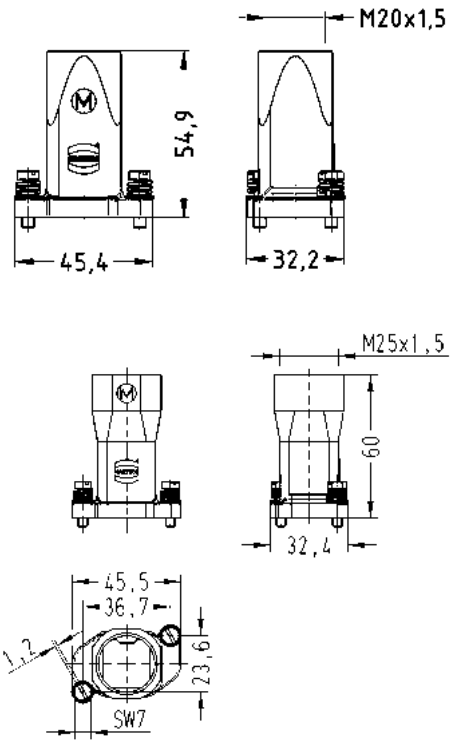

Hoods/housings for harsh outdoor environments
Toggle locking

Identification	Cable entry	Part number	Drawing (dimensions in mm)
Han® HPR , Hoods, Top entry, Pack contents: With seal screw 	1x M20 1x M25	19 40 003 0400 19 40 003 0401	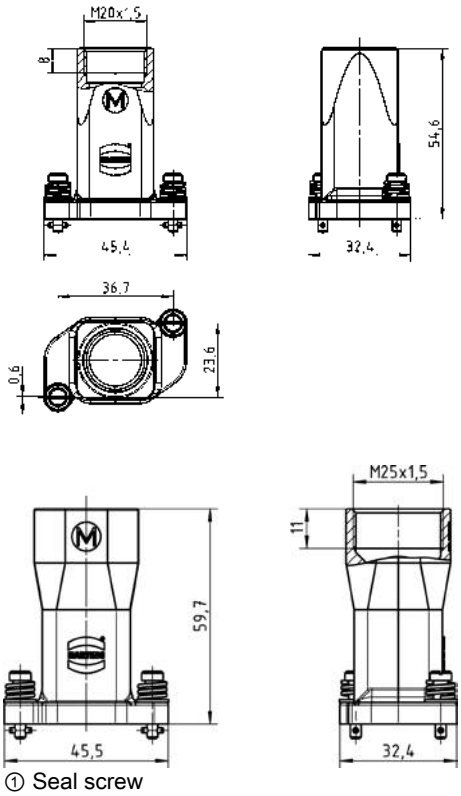 ① Seal screw

Hoods/housings for harsh outdoor environments
Screw locking

Identification	Cable entry	Part number	Drawing (dimensions in mm)
Han® HPR , Hoods, Top entry, Pack contents: With seal screw 	1x M20 1x M25	19 40 003 0410 19 40 003 0411	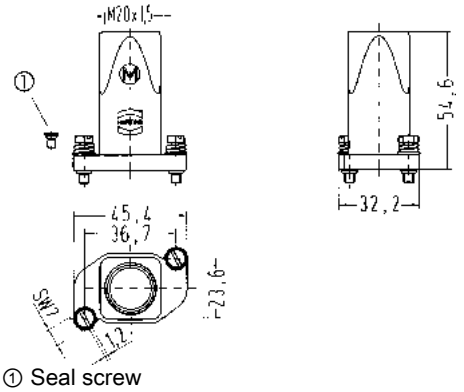 ① Seal screw 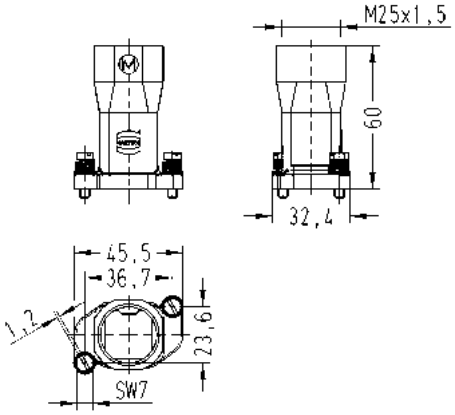

Han® PCB termination

Contents	Page
Han-Fast® Lock	**20.11**
PCB adapter for Han DD®	**20.13**
PCB adapter for Han® DDD module	**20.16**
PCB adapter for Han® 40 A Axial module	**20.18**
PCB adapter for Han E®	**20.20**
PCB adapter for Han® Q 4/2	**20.22**
PCB adapter for Han® Q 5/0	**20.25**
PCB adapter for Han® Q 7/0	**20.28**
PCB adapter for Han® Q 8/0	**20.31**
PCB adapter for Han® Q 12/0	**20.34**

PCB adapter for Han DD®

Layout of PCB

Han® 24 DD

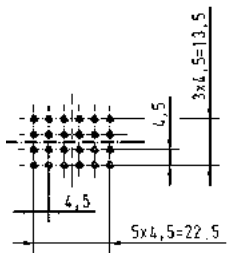

Han® 42 DD

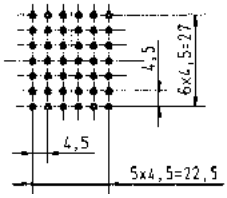

Han® 72 DD

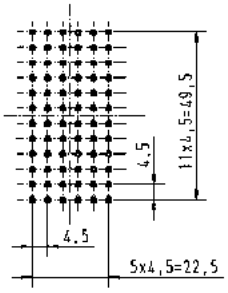

Han® 108 DD

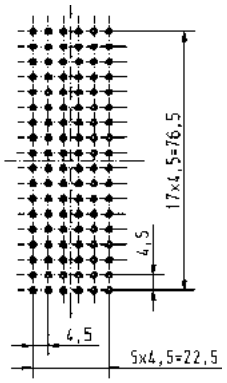

Recommended hole diameter: 0.8 mm

Assembly situation

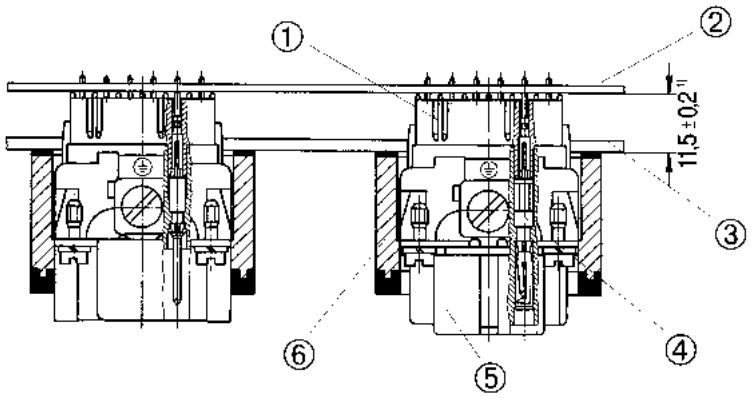

① PCB adapter
② Printed circuit board (PCB)
③ Switch board panel
④ Han DD® double contact
⑤ Han DD® insert
⑥ Han® B bulkhead mounted housing

1) for Han® B EMC housings spacing of 12.5 ± 0.2 mm is necessary as no flange seal is used

Layout of PCB

Han® 6 E

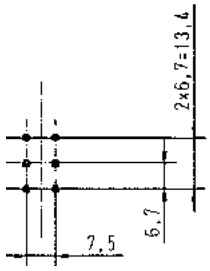

Han® 10 E

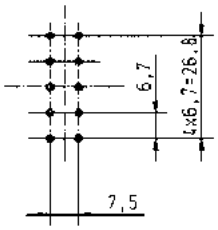

Han® 16 E

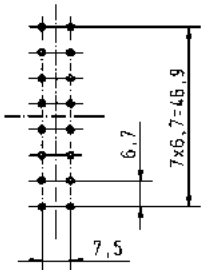

Han® 24 E

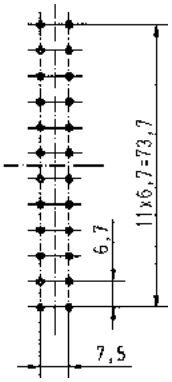

Assembly situation

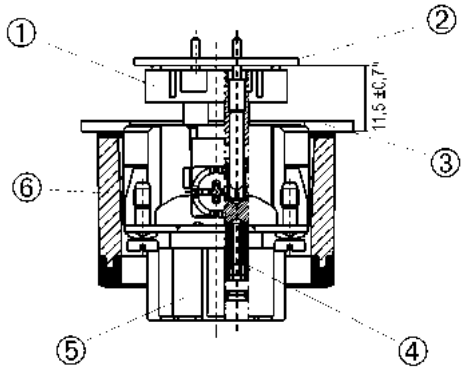

① PCB adapter
② Printed circuit board (PCB)
③ Switch board panel
④ Han E® double contact
⑤ Han E® insert
⑥ Han® B bulkhead mounted housing

1) for Han® B EMC housings spacing of 12.5 ± 0.7 mm is necessary as no flange seal is used

Layout of PCB

Dimensions in mm

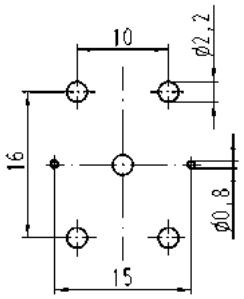

Assembly situation

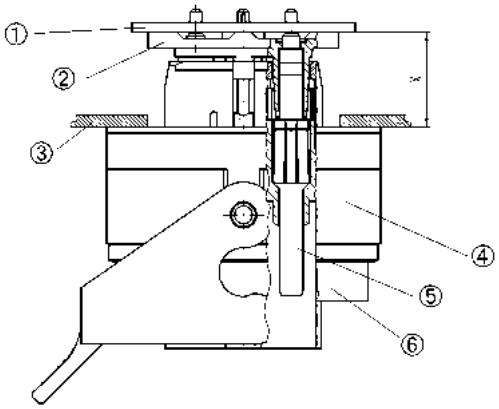

X = 16^{+1} with signal contact or 16^{+2} without signal contact

① Printed circuit board (PCB)
② PCB adapter
③ Switch board panel
④ Han-Compact® bulkhead mounted housing
⑤ Han® C double contact
⑥ Han® Q 4/2 insert

Layout of PCB

Dimensions in mm

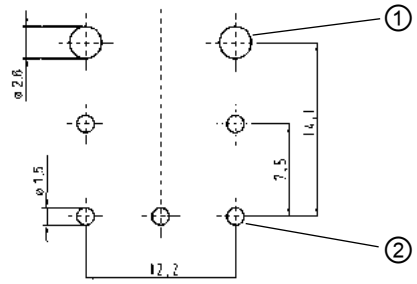

① Recommended hole diameter: 2.6 mm
② Recommended hole diameter: 1.5 mm

Assembly situation

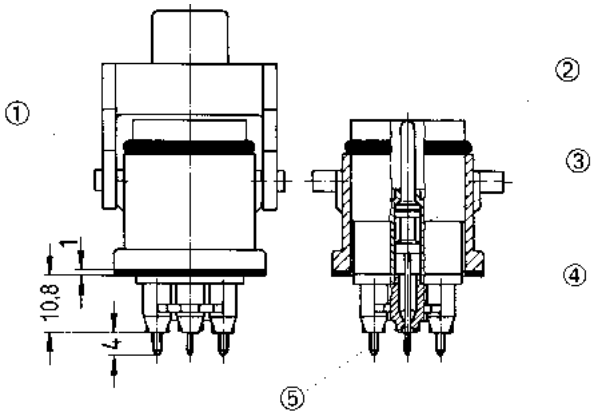

① Han® 3 A bulkhead mounting housing
② Han® Q 5/0
③ Solder contacts
④ PCB adapter
⑤ Connection to printed circuit board

PCB adapter for Han® Q 7/0

Layout of PCB

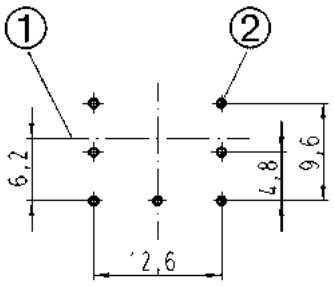

Dimensions in mm

① Median plane of the housing
② Recommended hole diameter: 0.8 mm

Assembly situation

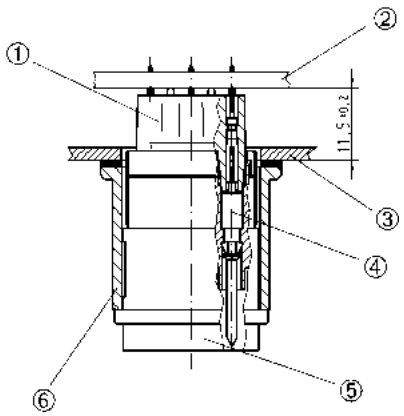

① PCB adapter
② Printed circuit board (PCB)
③ Switch board panel
④ Han D® double contact
⑤ Han® Q 7/0 Insert
⑥ Han® 3 A bulkhead mounting housing

Layout of PCB

Dimensions in mm

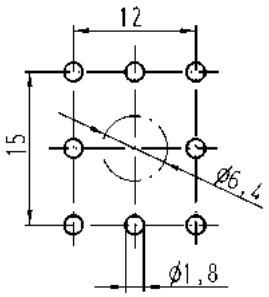

Assembly situation

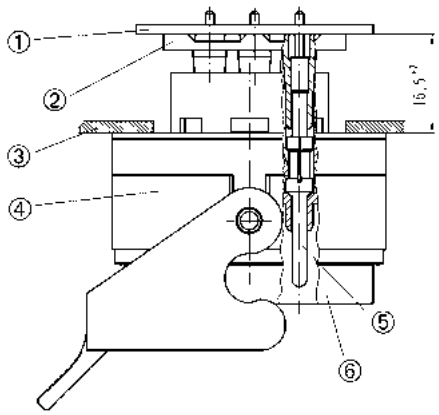

① Printed circuit board (PCB)
② PCB adapter
③ Switch board panel
④ Han-Compact® bulkhead mounted housing
⑤ Han E® double contact
⑥ Han® Q 8/0 Insert

Layout of PCB

Dimensions in mm

Recommended hole diameter: 0.8 mm

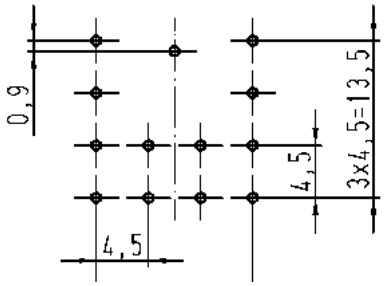

Assembly situation

Han® 3 A Standard / EMC

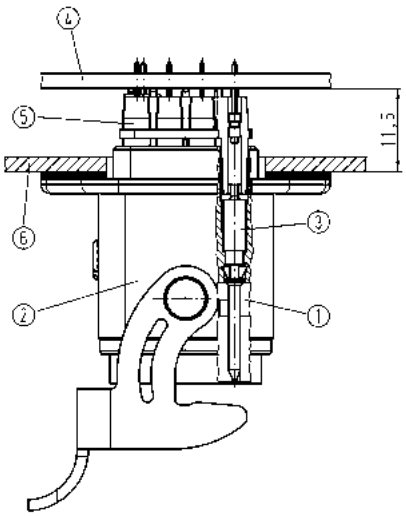

Han® 3 A plastic

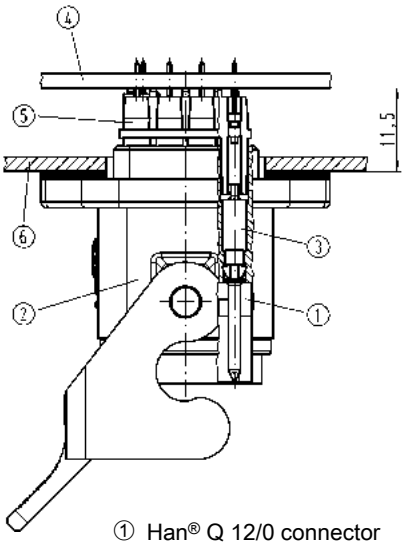

Han® 3 A HPR

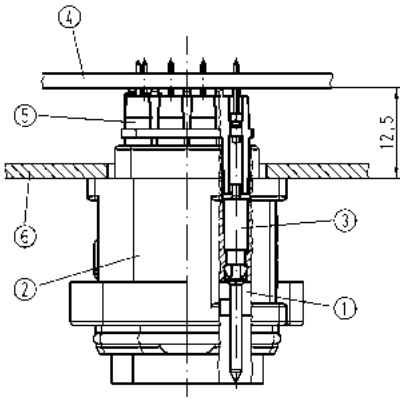

① Han® Q 12/0 connector
② Han® 3 A housing bulkhead mounting
③ R15-double contact
④ Printed circuit board (PCB)
⑤ PCB adapter
⑥ Switch board panel

Layout of PCB

Dimensions in mm

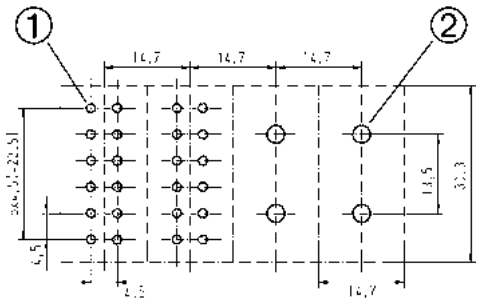

Han DD® module

Han® 40 A module

① Recommended hole diameter: 0.8 mm
② Recommended hole diameter: 3.2 mm

Assembly situation

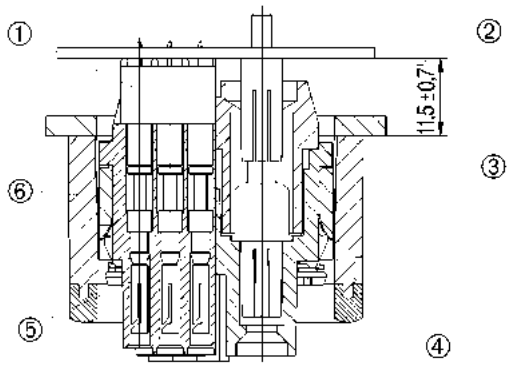

① Han DD® PCB-adapter
② Han® C solder contact
③ Switch board panel
④ Module for connection to printed circuit board
⑤ Han D® double contact
⑥ Han® B bulkhead mounted housing

1) for Han® B EMC housings spacing of 12.5 ± 0.7 mm is necessary as no flange seal is used

PCB adapter for Han® DDD module

Layout of PCB

Dimensions in mm

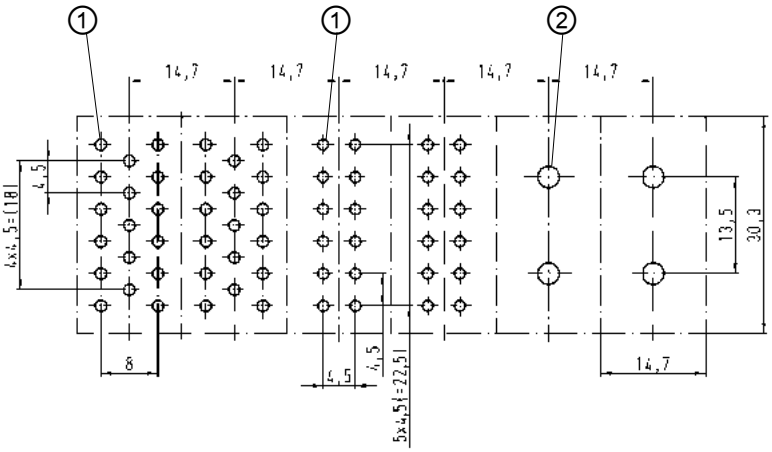

Han® DDD module Han® DD module Han® 70 A module

① Recommended hole diameter: 0.8 mm
② Recommended hole diameter: 3.2 mm

Assembly situation

Dimensions in mm

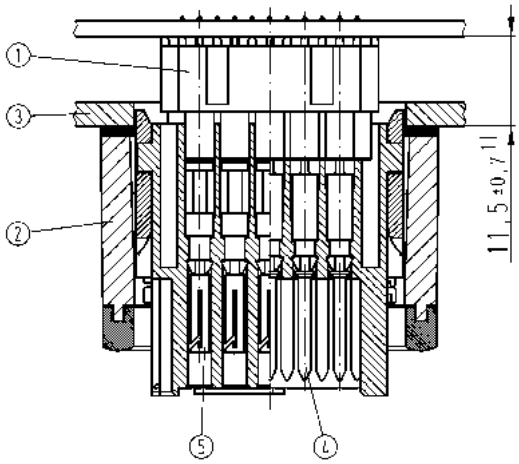

① Han DDD® PCB adapter 5 pins
② Han® B bulkhead mounted housing
③ Switch board panel
④ Han D® double male contact, 09 15 000 6197
⑤ Han D® double female contact, 09 15 000 6291

1) for Han® B EMV hood and housing spacing of 12.5 ±0.7 mm is necessary as no flange seal is used.

For further information and Han-Modular® frames please refer to chapter 06 (Han-Modular®)

Features

- Solder free PCB termination
- PCB contact with locking element
- Machine processing
- Flexible in terms of applications
- Practical and easy handling
- Fast assembly to PCB
- Locking directly on the PCB

Technical characteristics

Contact resistance	≤2 mΩ
Material (locking)	Copper alloy
Surface (locking)	Passivated
Material (contacts)	Copper alloy
RoHS	compliant with exemption
RoHS exemptions	**6c:** Copper alloy containing up to 4 % lead by weight

Derating

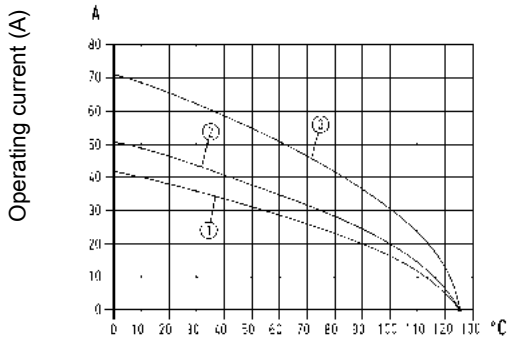

Ambient temperature (°C)

① Conductor cross-section 4 mm²
② Conductor cross-section 6 mm²
③ Conductor cross-section 10 mm²

Specifications and approvals

UL 1977 ECBT2.E235076
CSA-C22.2 No. 182.3 ECBT8.E235076

Details

PCB thickness 1.6 ... 3.2 mm

Clearance and creepage distances have to be considered for the printed circuit board

Finished hole d= 4.4 mm +0.05/-0.04

The new connection of wires to the PCB offers optimized PCB design, combined with outstanding contact qualities.

The Han-Fast® Lock is flexible and allows a fast and simple PCB connection. The PCB has one drilled hole and a pad.

The inner surface of the plated drilled hole serves as the interface. The Han-Fast® Lock is simply inserted into the through-plated PCB hole. The locking pin is pushed in and hence locks the contact into position.

The solder free connection technique is easy to handle and to operate. Maintenance has been made simple with the facility to detach the contact.

Han-Fast® Lock also supports SMD assembly of the PCB.

- Current up to 60 Amps
- Standard drilled hole with pad
- Position independent of connector
- Solder free PCB termination
- Easy locking solution

Han-Fast® Lock



Identification	Conductor cross-section (mm²)	Part number	Drawing (dimensions in mm)
Han-Fast® Lock , PCB contact, With pin , Pack contents: Single contact Contact surface: Silver plated	1,5 ... 2,5 4 ... 6 10	09 08 000 7122 09 08 000 7123 09 08 000 7124	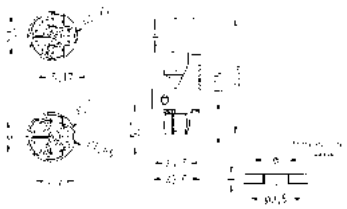 Stripping length 7.5 mm
Han-Fast® Lock , PCB contact, With pin Angled , Pack contents: Single contact Contact surface: Silver plated	1,5 ... 2,5 4 ... 6 10	09 08 000 7222 09 08 000 7223 09 08 000 7224	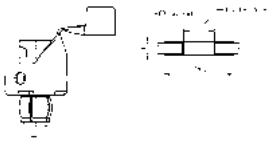 Stripping length 7.5 mm
Han-Fast® Lock , PCB contact, With pin , Pack contents: On a reel Contact surface: Silver plated	1,5 ... 2,5 4 ... 6 10	09 08 000 6122 09 08 000 6123 09 08 000 6124	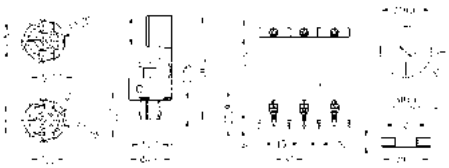 Stripping length 7.5 mm

PCB adapter for Han DD®

Features

- Robust design
- Suitable for standard and EMC hoods and housings
- Low wiring costs
- High density of contacts

Technical characteristics

Electrical data acc. to IEC 61984	7,5 A 250 V 4 kV 3
Rated current	7.5 A
Rated voltage	250 V
Rated impulse voltage	4 kV
Pollution degree	3
Contact resistance	≤3 mΩ
Limiting temperature	-40 ... +125 °C
Material (insert)	Polyamide
Material (contacts)	Copper alloy
RoHS	compliant with exemption
RoHS exemptions	**6c:** Copper alloy containing up to 4 % lead by weight

Specifications and approvals

EN 60664-1
IEC 61984
UL 1977 ECBT2.E235076
CSA-C22.2 No. 182.3 ECBT8.E235076

Details

Han DD® crimp inserts see chapter 02

Modules see chapter 06

Han® B bulkhead mounted housings see chapter 31

Crimping tools see chapter 90

PCB adapter for Han DD® crimp inserts

Identification	Part number Male	Part number Female	Drawing (dimensions in mm)
Han D® , PCB contact, Contact surface: Silver plated 	09 15 000 6191	09 15 000 6291	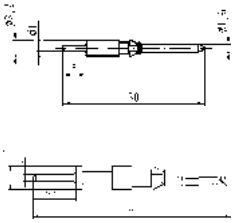
PCB adapter, In the Han DD® crimp insert, In the Han DD® module, In the Han® DDD module (different electrical data: 7.5 A 160 V 2.5 kV 3)  for PCB´s up to 1.6 mm	09 16 000 9905	09 16 000 9905	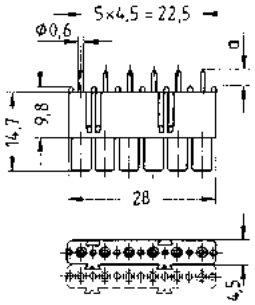 09 16 000 9905 a= 2.6 09 16 000 9908 a= 3.4
PCB adapter, In the Han DD® crimp insert, In the Han DD® module, In the Han® DDD module (different electrical data: 7.5 A 160 V 2.5 kV 3)  for PCB´s up to 2.4 mm	09 16 000 9908	09 16 000 9908	

PCB adapter for Han DD® module

Identification	Part number Male	Part number Female	Drawing (dimensions in mm)
Han D® , PCB contact, Contact surface: Silver plated 	09 15 000 6191	09 15 000 6294	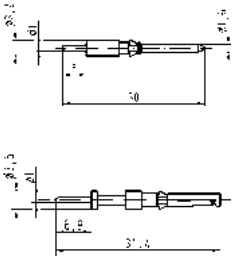
PCB adapter, In the Han DD® crimp insert, In the Han DD® module, In the Han® DDD module (different electrical data: 7.5 A 160 V 2.5 kV 3)  for PCB´s up to 1.6 mm	09 16 000 9905	09 16 000 9905	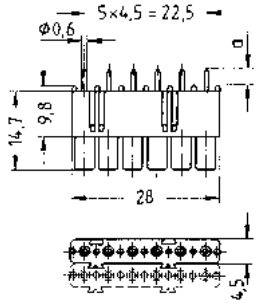 09 16 000 9905 a= 2.6 09 16 000 9908 a= 3.4
PCB adapter, In the Han DD® crimp insert, In the Han DD® module, In the Han® DDD module (different electrical data: 7.5 A 160 V 2.5 kV 3)  for PCB´s up to 2.4 mm	09 16 000 9908	09 16 000 9908	

PCB adapter for Han® DDD module

Features

- Robust design
- Suitable for standard and EMC hoods and housings
- Low wiring costs
- High density of contacts

Technical characteristics

Electrical data acc. to IEC 61984	7,5 A 160 V 2,5 kV 3
Rated current	7.5 A
Rated voltage	160 V
Rated impulse voltage	2.5 kV
Pollution degree	3
Contact resistance	≤3 mΩ
Limiting temperature	-40 ... +125 °C
Material (insert)	Polyamide
Material (contacts)	Copper alloy
RoHS	compliant with exemption
RoHS exemptions	**6c:** Copper alloy containing up to 4 % lead by weight

Specifications and approvals

EN 60664-1
IEC 61984
UL 1977 ECBT2.E235076
CSA-C22.2 No. 182.3 ECBT8.E235076

Details

Modules see chapter 06

Han® B bulkhead mounted housings see chapter 31

Crimping tools see chapter 90

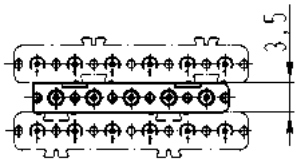

For a 17-pin PCB termination with the Han® DDD module two 6-pin and one 5-pin PCB adapters are necessary.

PCB adapter for Han® DDD module

Identification	Part number Male	Part number Female	Drawing (dimensions in mm)
Han D® , PCB contact, Contact surface: Silver plated 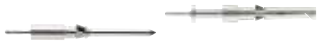	09 15 000 6197	09 15 000 6291	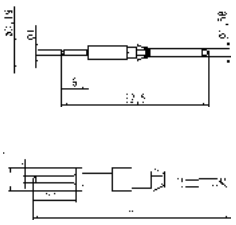
PCB adapter, In the Han DD® crimp insert, In the Han DD® module, In the Han® DDD module (different electrical data: 7.5 A 160 V 2.5 kV 3)  for PCB´s up to 1.6 mm	09 16 000 9905	09 16 000 9905	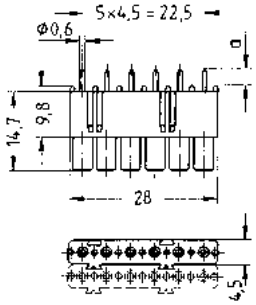 09 16 000 9905 a= 2.6 09 16 000 9908 a= 3.4
PCB adapter, In the Han DD® crimp insert, In the Han DD® module, In the Han® DDD module (different electrical data: 7.5 A 160 V 2.5 kV 3)  for PCB´s up to 2.4 mm	09 16 000 9908	09 16 000 9908	
PCB adapter, 5-pin, In the Han® DDD module  for PCB´s up to 1.6 mm	09 16 000 9915	09 16 000 9915	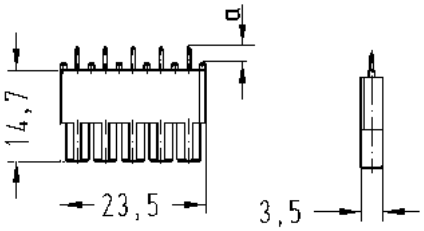 09 16 000 9915 a= 2.6 09 16 000 9918 a= 3.4
PCB adapter, 5-pin, In the Han® DDD module  for PCB´s up to 2.4 mm	09 16 000 9918	09 16 000 9918	

PCB adapter for Han® 40 A Axial module

Features

- Modular assembly
- Robust design
- Suitable for standard and EMC hoods and housings
- Low wiring costs

Technical characteristics

Electrical data acc. to IEC 61984	40 A 500 V 6 kV 3
Rated current	40 A
Rated voltage	500 V
Rated impulse voltage	6 kV
Pollution degree	3
Contact resistance	≤3 mΩ
Limiting temperature	-40 ... +125 °C
Material (insert)	Polycarbonate
Material (contacts)	Copper alloy
RoHS	compliant with exemption
RoHS exemptions	**6c:** Copper alloy containing up to 4 % lead by weight

Specifications and approvals

EN 60664-1
IEC 61984

Details

Hinged frames see chapter 06

PCB adapter for Han® 40 A Axial module

Identification	Part number Male	Part number Female	Drawing (dimensions in mm)
Han® C , PCB contact, Contact surface: Silver plated 	09 32 000 6295		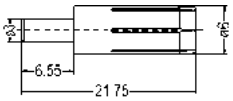
PCB adapter, In the Han® 40 A Axial module 	09 14 002 2603	09 14 002 2703	

PCB adapter for Han E®

Features

- Robust design
- Suitable for standard and EMC hoods and housings
- Low wiring costs
- Counter connector available with screw, crimp or cage clamp termination

Technical characteristics

Electrical data acc. to IEC 61984	16 A 500 V 6 kV 3
Rated current	16 A
Rated voltage	500 V
Rated impulse voltage	6 kV
Pollution degree	3
Contact resistance	≤3 mΩ
Limiting temperature	-40 ... +125 °C
Material (insert)	Polycarbonate
Material (contacts)	Copper alloy
RoHS	compliant with exemption
RoHS exemptions	**6c:** Copper alloy containing up to 4 % lead by weight

Specifications and approvals

EN 60664-1
IEC 61984

Details

Han E® crimp inserts see chapter 03

Hoods/Housings see chapter 31

Crimping tools see chapter 90

PCB adapter for Han E®

Identification	Part number Male	Part number Female	Drawing (dimensions in mm)
Han E® , PCB contact, Contact surface: Silver plated 	09 33 000 6180	09 33 000 6280	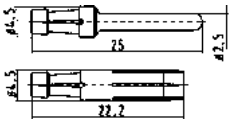
PCB adapter, In the Han E® crimp insert 	09 33 000 9996	09 33 000 9996	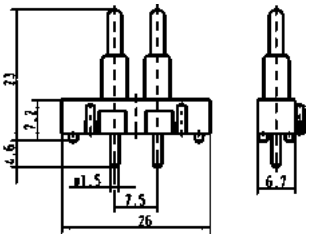

PCB adapter for Han® Q 4/2

Features

- Robust design
- Low wiring costs
- High density of contacts
- Suitable for Han-Compact® hoods and housings

Technical characteristics

Electrical data acc. to IEC 61984	30 A 400/690 V 6 kV 2
Rated current	30 A
Rated voltage conductor-earth	400 V
Rated voltage conductor-conductor	690 V
Rated impulse voltage	6 kV
Pollution degree	2
Electrical data, signal	7,5 A 250 V 4 kV 2
Rated current (signal)	7.5 A
Rated voltage (signal)	250 V
Rated impulse voltage (signal)	4 kV
Pollution degree (signal)	2
Contact resistance	≤3 mΩ
Limiting temperature	-40 ... +125 °C
Degree of protection acc. to IEC 60529	IP65
Type rating acc. to UL 50 / UL 50E	4, 12
Material (insert)	LCP
Material (hood/housing)	Polycarbonate
Colour (hood/housing)	RAL 9005 (jet black)
Material (seal)	NBR
Material (locking)	Polyamide
Colour (locking)	RAL 9005 (jet black)
Material (contacts)	Copper alloy
Material flammability class acc. to UL 94	V-0
Material flammability class acc. to UL 94 (locking levers)	V-0
RoHS	compliant with exemption, compliant
RoHS exemptions	**6c:** Copper alloy containing up to 4 % lead by weight

Specifications and approvals

EN 60664-1
IEC 61984
UL 1977 ECBT2.E235076
CSA-C22.2 No. 182.3 ECBT8.E235076
DNV GL

Details

Han® Q inserts see chapter 13

Crimping tools see chapter 90

PCB adapter for Han® Q 4/2

Identification	Part number Male	Part number Female	Drawing (dimensions in mm)
Han® C , PCB contact, Contact surface: Silver plated 	09 32 000 6180	09 32 000 6280	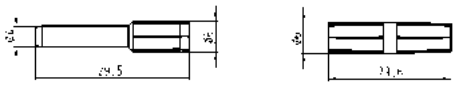
Han D® , PCB contact, Contact surface: Silver plated 	09 15 000 6191	09 15 000 6293	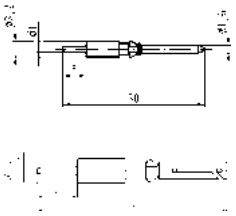
PCB adapter, In the Han® Q 4/2  for PCB´s up to 2.4 mm	09 12 006 9901	09 12 006 9901	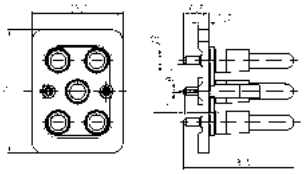

PCB adapter for Han® Q 4/2

Size Han-Compact®

Hoods/housings for industrial applications
Single locking lever

Identification	Part number	Drawing (dimensions in mm)
Han-Compact® , Bulkhead mounted housings, Straight 	09 12 008 0327	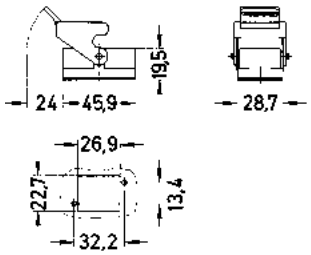

PCB adapter for Han® Q 5/0

Features

- Robust design
- Suitable only for EMC housings size Han® 3 A
- Additional robust and secure PE-connection between housing and PCB

Technical characteristics

Electrical data acc. to IEC 61984	10 A 230/400 V 4 kV 3
Rated current	10 A
Rated voltage conductor-earth	230 V
Rated voltage conductor-conductor	400 V
Rated impulse voltage	4 kV
Pollution degree	3
Contact resistance	≤3 mΩ
Limiting temperature	-40 ... +125 °C
Degree of protection acc. to IEC 60529	IP44, IP65 / IP67, with seal screw 09 20 000 9918
Material (insert)	Polycarbonate
Material (hood/housing)	Zinc die-cast
Surface (hood/housing)	Uncoated
Colour (hood/housing)	Unpainted
Material (seal)	PTFE
Material (locking)	Steel
Surface (locking)	Zinc plated
Material (contacts)	Copper alloy
RoHS	compliant with exemption, compliant
RoHS exemptions	**6c:** Copper alloy containing up to 4 % lead by weight, **6a:** Lead as an alloying element in steel for machining purposes and in galvanised steel containing up to 0,35 % lead by weight

Specifications and approvals

EN 60664-1
IEC 61984
UL 1977 ECBT2.E235076
DNV GL

Details

Han® Q inserts see chapter 13

Crimping tools see chapter 90

PCB adapter for Han® Q 5/0

Identification	Part number Male	Part number Female	Drawing (dimensions in mm)
Han E® , PCB contact, Contact surface: Silver plated 	09 33 000 6195	09 33 000 6295	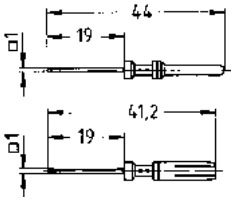
PCB adapter, 5-pin, In the Han® Q 5/0  for PCB´s up to 2.4 mm	09 12 000 9905	09 12 000 9905	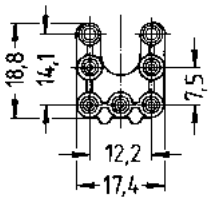 Adapter PE contact panel 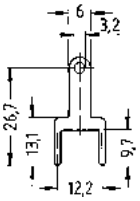

PCB adapter for Han® Q 5/0

Size 3 A

Hoods/Housings for higher EMC requirements
Single locking lever

Identification	Part number	Drawing (dimensions in mm)
Han® EMC , Bulkhead mounted housings, Straight, for PCB termination with Han® Q 5/0 	09 62 003 0304	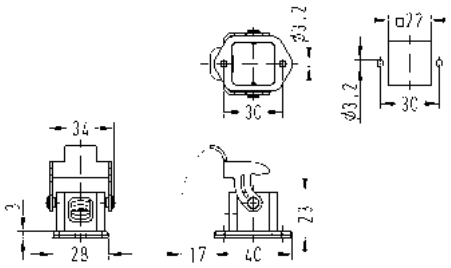

PCB adapter for Han® Q 7/0

Features

- Robust design
- Suitable for standard and EMC hoods and housings
- High density of contacts

Technical characteristics

Electrical data acc. to IEC 61984	7,5 A 250 V 4 kV 3
Rated current	7.5 A
Rated voltage	250 V
Rated impulse voltage	4 kV
Pollution degree	3
Contact resistance	≤3 mΩ
Limiting temperature	-40 ... +125 °C
Degree of protection acc. to IEC 60529	IP44, IP65 / IP67, with seal screw 09 20 000 9918
Material (insert)	Polycarbonate
Material (hood/housing)	Zinc die-cast
Surface (hood/housing)	Powder-coated
Colour (hood/housing)	RAL 7037 (dust grey)
Material (seal)	NBR
Material (locking)	Steel
Surface (locking)	Zinc plated
Material (contacts)	Copper alloy
RoHS	compliant with exemption
RoHS exemptions	**6c:** Copper alloy containing up to 4 % lead by weight, **6a:** Lead as an alloying element in steel for machining purposes and in galvanised steel containing up to 0,35 % lead by weight

Specifications and approvals

EN 60664-1
IEC 61984
DNV GL

Details

Han® Q inserts see chapter 13

Crimping tools see chapter 90

PCB adapter for Han® Q 7/0

Identification	Part number Male	Part number Female	Drawing (dimensions in mm)
Han D® , PCB contact, Contact surface: Silver plated 	09 15 000 6190	09 15 000 6290	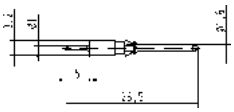 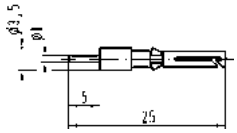
PCB adapter, In the Han® Q 7/0  for PCB´s up to 2.4 mm	09 12 000 9908	09 12 000 9908	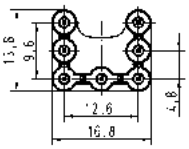 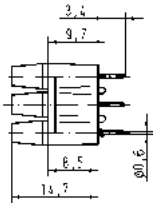

PCB adapter for Han® Q 7/0 Size 3 A

Standard Hoods/housings for industrial applications
Single locking lever

Identification	Part number	Drawing (dimensions in mm)
Han A® , Bulkhead mounted housings, Straight 	09 20 003 0301	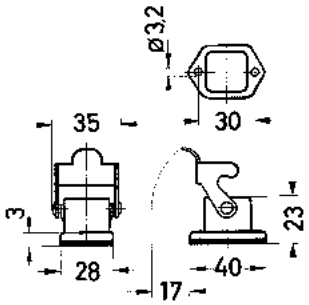 Panel cut out 22 x 22 mm

PCB adapter for Han® Q 8/0

Features

- Robust design
- Suitable for Han-Compact® hoods and housings
- Low wiring costs
- High density of contacts

Technical characteristics

Electrical data acc. to IEC 61984	16 A 230/400 V 4 kV 2
Rated current	16 A
Rated voltage conductor-earth	230 V
Rated voltage conductor-conductor	400 V
Rated impulse voltage	4 kV
Pollution degree	2
Contact resistance	≤3 mΩ
Limiting temperature	-40 ... +125 °C
Degree of protection acc. to IEC 60529	IP65
Type rating acc. to UL 50 / UL 50E	4, 12
Material (insert)	LCP
Material (hood/housing)	Polycarbonate
Colour (hood/housing)	RAL 9005 (jet black)
Material (seal)	NBR
Material (locking)	Polyamide
Colour (locking)	RAL 9005 (jet black)
Material (contacts)	Copper alloy
Material flammability class acc. to UL 94	V-0
Material flammability class acc. to UL 94 (locking levers)	V-0
RoHS	compliant with exemption, compliant
RoHS exemptions	**6c:** Copper alloy containing up to 4 % lead by weight

Specifications and approvals

EN 60664-1
IEC 61984
UL 1977 ECBT2.E235076
CSA-C22.2 No. 182.3 ECBT8.E235076
DNV GL

Details

Han® Q inserts see chapter 13

Crimping tools see chapter 90

PCB adapter for Han® Q 8/0

Identification	Part number Male	Part number Female	Drawing (dimensions in mm)
Han E® , PCB contact, Contact surface: Silver plated 	09 33 000 6180	09 33 000 6280	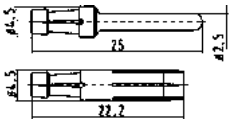
PCB adapter, In the Han® Q 8/0  for PCB´s up to 1.6 mm	09 12 008 9901	09 12 008 9901	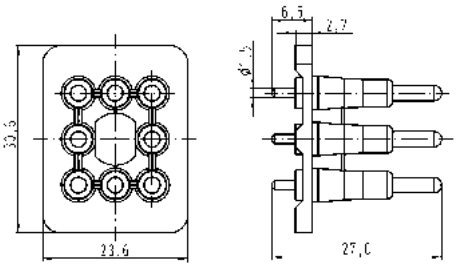

Hoods/housings for industrial applications
Single locking lever

Identification	Part number	Drawing (dimensions in mm)
Han-Compact® , Bulkhead mounted housings, Straight 	09 12 008 0327	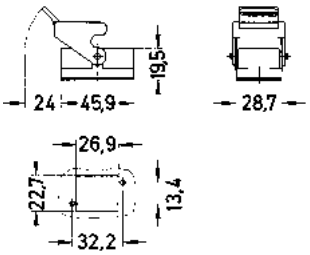

PCB adapter for Han® Q 12/0

Features

- Robust design
- Suitable for standard and EMC hoods and housings
- High density of contacts

Technical characteristics

Number of contacts	12
Electrical data acc. to IEC 61984	7,5 A 250 V 4 kV 3
Rated current	7.5 A
Rated voltage	250 V
Rated impulse voltage	4 kV
Pollution degree	3
Insulation resistance	≥10^{10} Ω
Contact resistance	≤3 mΩ
Limiting temperature	-40 ... +125 °C
Mating cycles	≥500
Material (insert)	Polycarbonate
Colour (insert)	RAL 7032 (pebble grey)
Material (contacts)	Copper alloy
Material flammability class acc. to UL 94	V-0
RoHS	compliant with exemption
RoHS exemptions	**6c:** Copper alloy containing up to 4 % lead by weight

Derating

Current carrying capacity

The current carrying capacity of the connectors is limited by the thermal load capability of the contact element material including the connections and the insulating parts. The derating curve is therefore valid for currents which flow constantly (non-intermittent) through each contact element of the connector evenly, without exceeding the allowed maximum temperature.

Measuring and testing techniques acc. to IEC 60512-5-2

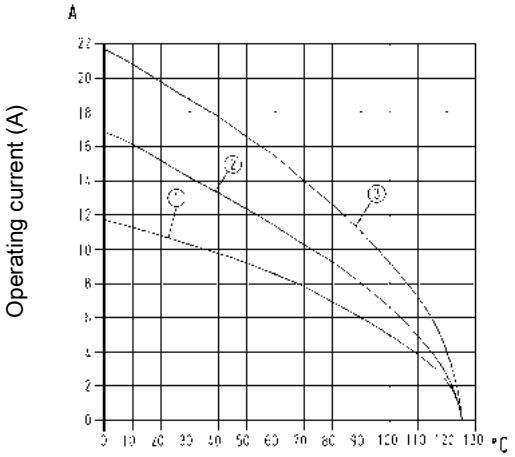

① Conductor cross-section 0.75 mm²
② Conductor cross-section 1.5 mm²
③ Conductor cross-section 2.5 mm²

Specifications and approvals

EN 60664-1
IEC 61984
UL 1977 ECBT2.E235076
CSA-C22.2 No. 182.3 ECBT8.E235076
DNV GL

Details

Crimping tools see chapter 90

PCB adapter for Han® Q 12/0 — Size 3 A

Number of contacts

12+ ⏚

7,5 A 250 V 4 kV 3

Identification	Part number Male	Part number Female	Drawing (dimensions in mm)
Han® Q , for PCB adapter, Solder termination  Please order contacts separately.	09 12 012 3002	09 12 012 3102	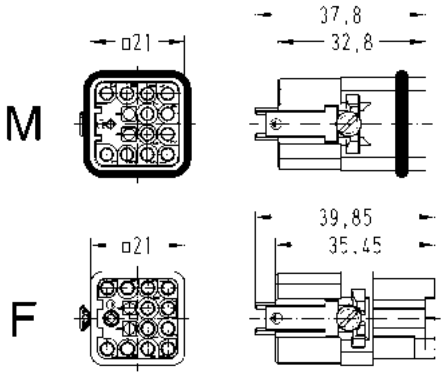
Han D® , PCB contact, Contact surface: Silver plated 	09 15 000 6191	09 15 000 6297	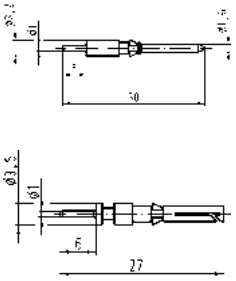
PCB adapter, In the Han® Q 12/0 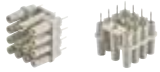 for PCB´s up to 2.4 mm	09 12 012 9901	09 12 012 9901	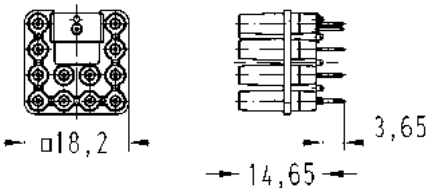

- Secondary mating between industrial connector and printed circuit board.
- No higher force is applied on the soldering joint when mating the industrial connector due to an additional mating point.
- No wiring between printed circuit board and industrial connector necessary.
- This means no wiring faults ➪ no testing, no costs
- Connecting times are minimized.
- Easy handling is time and cost saving.
- The production of mechanical and electrical / electronically components can be completely separated.
- Possibility to reach a higher degree of automation in the production (e.g. wave soldering of the PCBs).



Han DD® and Han® Q 5/0 PCB adapter
Wilhelm Fette GmbH, Germany

Han E® PCB adapter



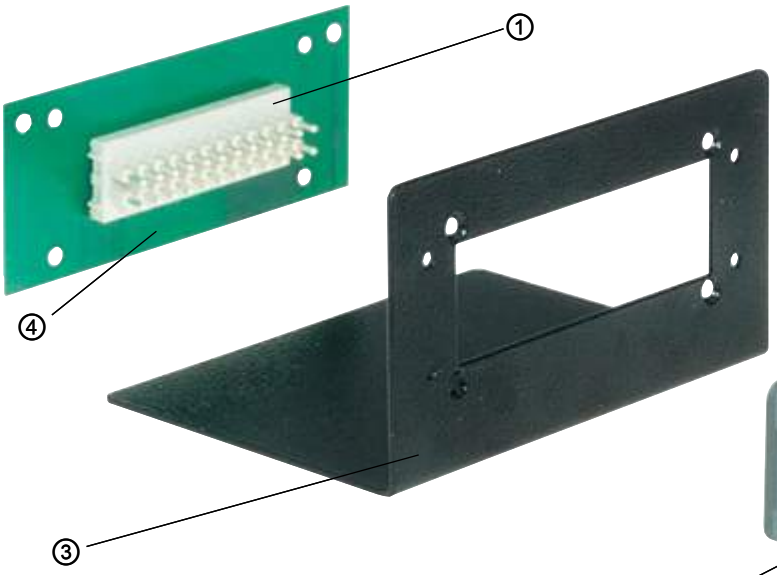

① PCB adapter for Han E®
② Han E® connector in a bulkhead mounted housing
③ Switch board panel
④ Printed circuit board (PCB)

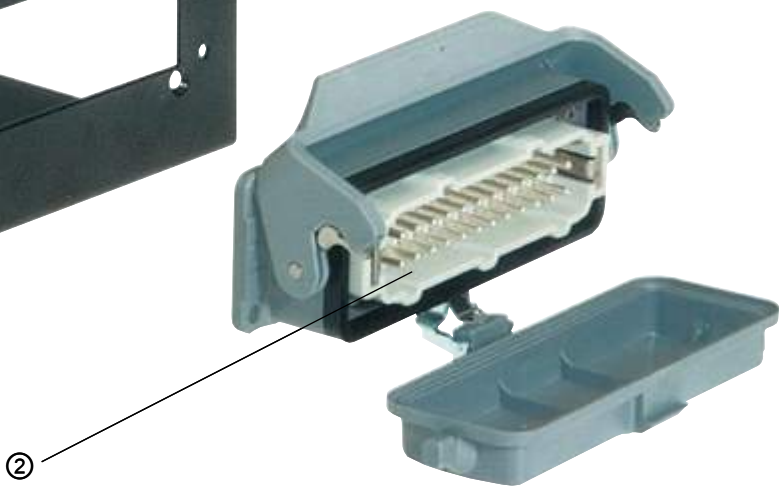

Contents | Page

Inserts for Han-*Yellock*® 10	**25.7**
Inserts for adapter frames	**25.9**
Quick Lock module	**25.11**
Crimp module	**25.13**
Multiplier block	**25.15**
Multiplier	**25.17**
Adapter frames	**25.20**
Monoblocks	**25.23**
Han-*Yellock*® 10 hoods/housings	**25.26**
Han-*Yellock*® 30 hoods/housings	**25.29**
Han-*Yellock*® 60 hoods/housings	**25.36**
Accessories	**25.43**

Description of the Han-*Yellock*® system

The Han-*Yellock*® - a special Han® connector

Han-*Yellock*® is a new product series which retains the core functionality but differs significantly from current size and shape formats. The approach of this series makes many new functions possible, for example:

- An internal, latched locking mechanism on the hood
- Multiplies the potentials in the connector with Han-*Yellock*® modules
- Usage of Han-Modular® modules with adapter frames
- Insulators can snap into the front or back walls of the housing
- Protected Earth contact (PE) in crimp or Quick Lock termination

These new technical features encourage sustained and effective improvements:
when purchasing products –

- Less article numbers and less inventory,

when planning for the electrical and mechanical layout –

- Less wiring work within a machine,

during the work flow –

- Less steps in the work flow and quicker assembly,

and during the after-sales stage –

- Reduced down times because of the latched locking mechanism and maintenance-friendly design

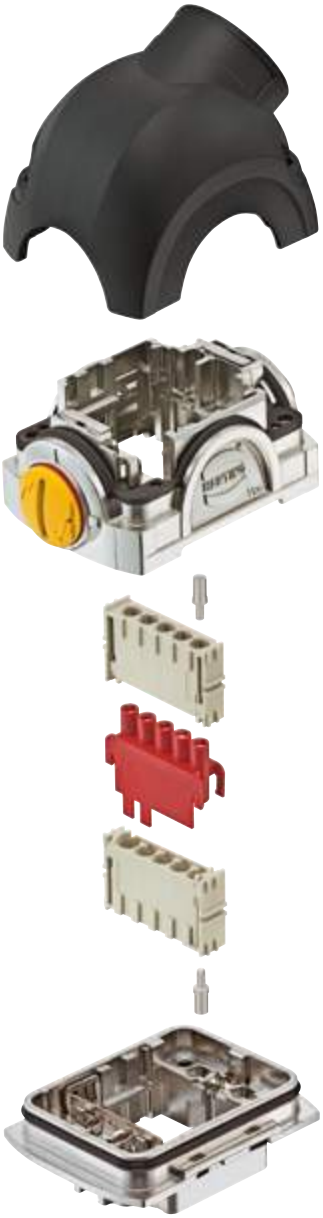

Assembly details

Design overview

The Han-*Yellock*® interface consists of a housing, bulkhead mounting, on the housing side and a carrier hood with cover on the cable side.
Han-*Yellock*® offers the following features when assembling components:

- Han-*Yellock*® modules require only male crimp contacts.
- The PE is contacted on the housing; it can be connected with crimp and/or Quick Lock contacts.
- The Han-*Yellock*® hoods/housing are not plug-compatible with all other Han® hood/housing series.

The Han-*Yellock*® system can be used with a variety of insulators and contact inserts in order to establish an interface.

The Locking

The locking ability is a key function of the Han-*Yellock*®. The function makes connections and disconnections safe, simple and quick – even under harsh industrial conditions.

Main advantages include:

- Easy handling
- Resistance to vibrations and shock
- Protected against accidental opening
- Compact, space-saving design

Han-*Yellock*® features a patented internal locking mechanism. The locking takes place as the cable and device sides are simply joined together. A red ring around the perimeter of the push button will be visible if the housing halves do not snap together properly. This ring disappears as soon as the internally protected stainless steel springs snap into place.

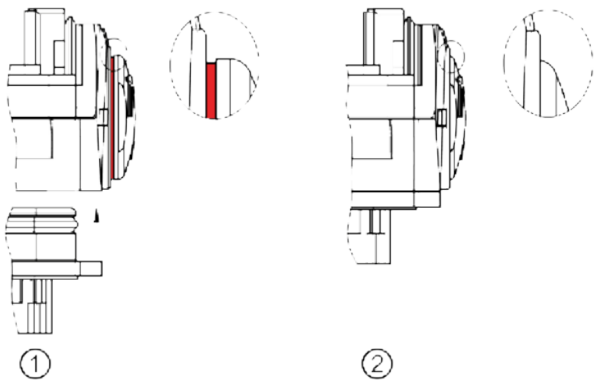

① ②

① unlocked
② locked

This press-button locking also features an integrated blocking function. The locking mechanism can be locked by rotating the button 90°. It is then no longer possible to open the connector.

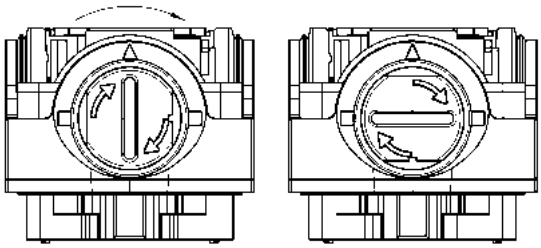

„open“ „blocked“

The press button can be set back to its visually open position only after the button is turned back 90°. It is then possible to release the two housing halves by pressing the snap-in button.

This feature provides an elegant mechanism for preventing an accidental opening of the connector – and no additional components are needed for it.

Han-*Yellock*® modules

This new product series enables an improved approach and strategy for electrical planning and procurement.

For assembling the Han-*Yellock*® connector only male crimp contacts are needed. The conduct between the two male contacts is made by multipliers.

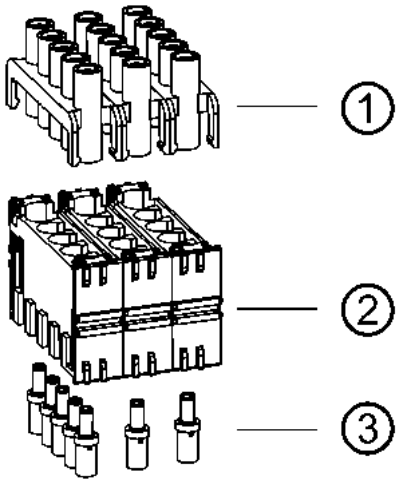

① multiplier
② Han-*Yellock*® module
③ Han-*Yellock*® crimp contacts

This concept allows a 1:1 wire to wire arrangement and in additon the use of bridges. Two to five contacts can be arranged.

It does not matter if the bridge attachment is inserted on the cable side or the housing side of the connector.

In the past, terminals blocks have been responsible for the function of multiplying potentials. But now this function has been integrated into the connector for a quick, compact and easy-to-service solution.

Inserting the module into the hoods/housing

- The Han-*Yellock*® module should only be inserted into the „A“ plug-in position in the metal clamp.

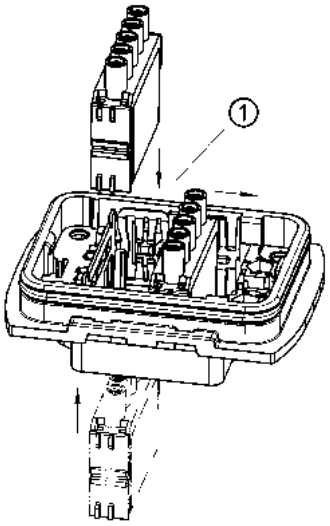

① plug-in position „A“

- The illustration shows the orientation of the module (see arrangement of contacts 1 ... 5).

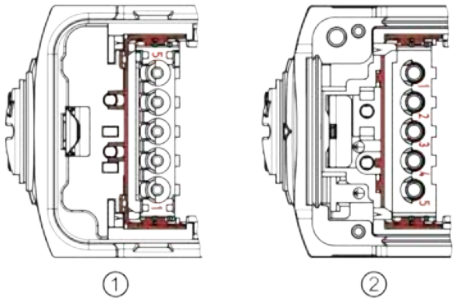

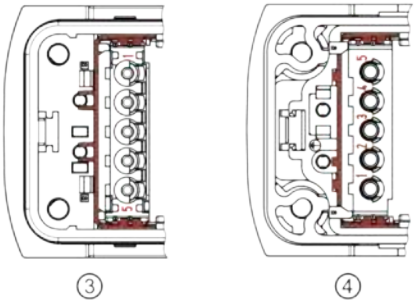

① Carrier hood, mating side
② Carrier hood, connection side
③ Housing, bulkhead mounting, mating side
④ Housing, bulkhead mounting, connection side

- A distinct click can be heard when the module snaps into position. It is then pushed along the rail to its final position. The plug-in slots must always be completely filled.

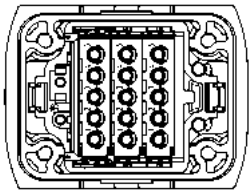

Disassembling the Han-*Yellock*® module

- The removal tool (part no. 11 99 000 0001) is required to take out the module.
- The following illustration shows how to insert the removal tool into the metal clamp. The tool should then be pressed down until it reaches the end stop.
- The tool is then pulled back and the module comes out of the housing.
- The removal can be made from the connection side as well as from the mating side.

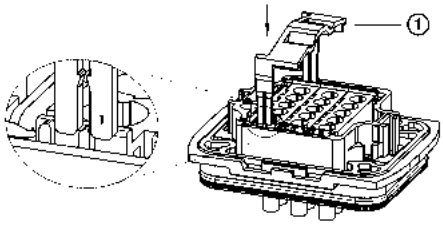

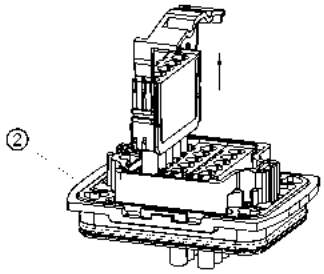

① removal tool
② housing, bulkhead mounting

The process is identical for both housings, bulkhead mounting, and carrier hoods.

The removal tool can be stored on the carrier hood:

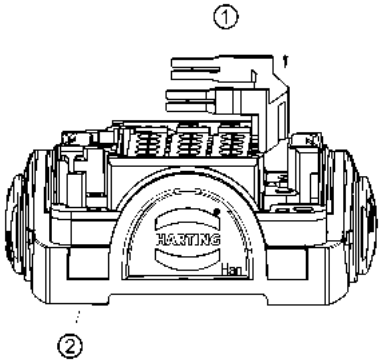

① removal tool
② carrier hood

Han-*Yellock*® adapter frame

Han-Modular® series interfaces can be established using the Han-*Yellock*® adapter frame. The connection is based on a male/female contact arrangement.

Inserting the adapter frame in the housing:

- The adapter frame can be snapped into the housing, bulkhead mounting, on the termination side and the mating side (refer to the illustration).
- The lateral plastic tabs („B“) are pressed into the metal clamps on the housing.
- The adapter frame then snaps in with a distinctly audible click.

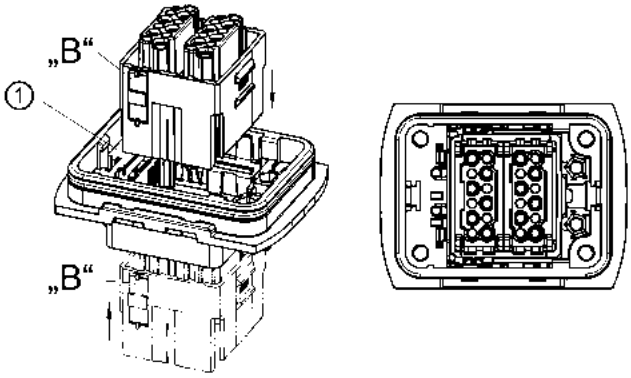

① metal clamp

Removal the adapter frame:

- The removal tool part no. 11 99 000 0001 is required for disassembly.
- The removal tool is inserted into the metal clamp and pressed down as shown in the following illustration. A screwdriver need also be placed into the notch in the housing.
- The removal tool should then be pulled outwards to remove the adapter frame from the housing.
- The removal can be made from the termination side as well as from the mating side.
- The process is identical for both housings, bulkhead mounting, and carrier hoods.

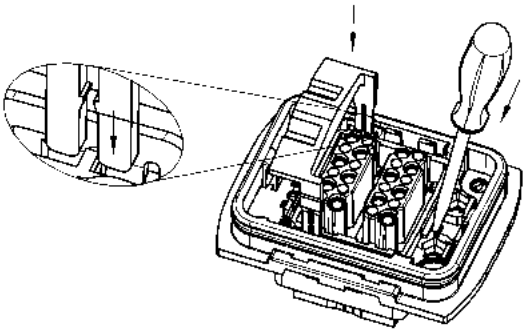

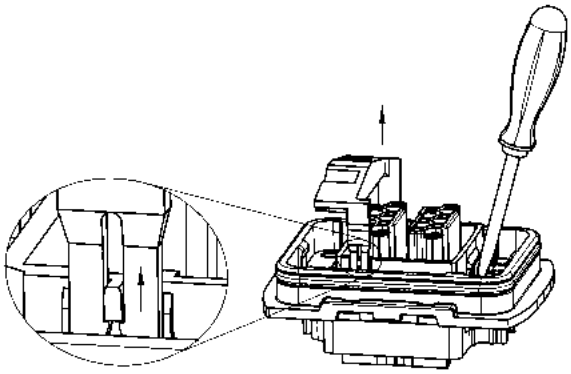

Han-*Yellock*® Protection covers

Protection cover function

To protect the insert against dust and water it is possible to use a Han-*Yellock*® protection cover.

The protection cover comes with a metal bearing pedestal and can be installed during initial or retrofit installation.

The Han-*Yellock*® design offer the possibility to snap in the pedestal either on the left or on the right side of the housing.

The direction of the cover movement can flip without turning the housing and inserts.

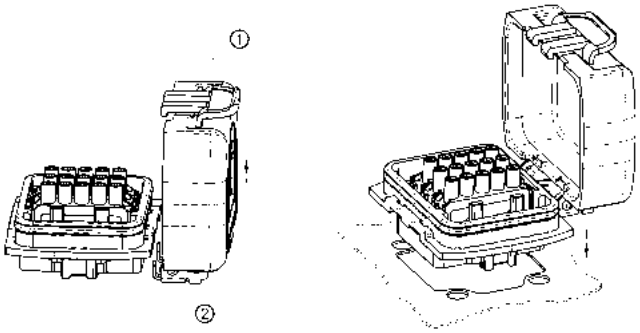

① cover
② bearing pedestal

Han-*Yellock*® Ground terminal

Ground terminal assembly

On the housing side ground terminals can be used.

After placing the frame deeply inside the housing slots the housing will be fixed to the panel leading to solid mounting of the complete set.

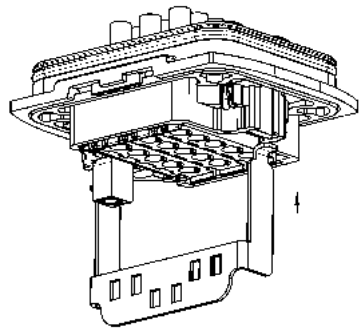

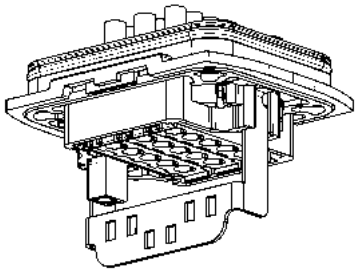

Inserts for Han-*Yellock*® 10

Series	Han® 3 A	Han® 3 A Quick Lock	Han® 3 A Quick Lock	Han® 4 A
Number of contacts	3 + ⏚	3 + ⏚	3 + ⏚	4 + ⏚
Termination	Screw terminal	Quick Lock termination	Quick Lock termination	Screw terminal
				
Rated current Rated voltage Wire gauge	10 A 230 / 400 V 0.75 ... 1.5 mm²	10 A 230 / 400 V 0.5 ... 2.5 mm²	10 A 230 / 400 V 0.25 ... 1.5 mm²	10 A 230 / 400 V 0.75 ... 1.5 mm²
Male insert (M)	09 20 003 2611	09 20 003 2633	09 20 003 2634	09 20 004 2611
Female insert (F)	09 20 003 2711	09 20 003 2733	09 20 003 2734	09 20 004 2711

Series	Han® 4 A Quick Lock	Han® 4 A Quick Lock	Han® 8 D	Han® 8 D Quick Lock
Number of contacts	4 + ⏚	4 + ⏚	8	8
Termination	Quick Lock termination	Quick Lock termination	Crimp terminal	Quick Lock termination
				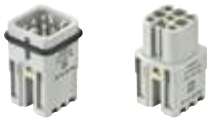
Rated current Rated voltage Wire gauge	10 A 230 / 400 V 0.5 ... 2.5 mm²	10 A 230 / 400 V 0.25 ... 1.5 mm²	10 A ~ 50 V / – 120 V 0.14 ... 2.5 mm²	10 A ~ 50 V / – 120 V 0.25 ... 1.5 mm²
Male insert (M)	09 20 004 2633	09 20 004 2634	09 36 008 3001	09 36 008 2632
Female insert (F)	09 20 004 2733	09 20 004 2734	09 36 008 3101	09 36 008 2732

Series	Han® Q 2/0	Han® Q 2/0	Han® Q 2/0	Han® Q 2/0
Number of contacts	2 + ⏚	2 + ⏚	2 + ⏚	2 + ⏚
Termination	Axial screw terminal	Axial screw terminal	Crimp terminal	Axial screw terminal
				
Rated current Rated voltage Wire gauge	40 A 400 V 2.5 ... 6 mm²	40 A 400 V 4 ... 10 mm²	40 A 400 V 1.5 ... 10 mm²	40 A 830 V 2.5 ... 6 mm²
Male insert (M)	09 12 002 2653	09 12 002 2651	09 12 002 3051	09 12 002 2654
Female insert (F)	09 12 002 2753	09 12 002 2751	09 12 002 3151	09 12 002 2754

By using in Han-*Yellock*® 10 hoods/housings the seal on the insert has to be removed.

Inserts for Han-*Yellock*® 10

Series	Han® Q 2/0	Han® Q 2/0	Han® Q 3/0	Han® Q 5/0
Number of contacts	2 + ⏚	2 + ⏚	3 + ⏚	5 + ⏚
Termination	Axial screw terminal 	Crimp terminal 	Crimp terminal	Crimp terminal 
Rated current Rated voltage Wire gauge	40 A 830 V 4 ... 10 mm²	40 A 830 V 1.5 ... 10 mm²	40 A 400 V 1.5 ... 10 mm²	16 A 230 / 400 V 0.14 ... 2.5 mm²
Male insert (M)	09 12 002 2652	09 12 002 3052	09 12 003 3051	09 12 005 3001
Female insert (F)	09 12 002 2752	09 12 002 3152	09 12 003 3151	09 12 005 3101

Series	Han® Q 5/0 Quick Lock	Han® Q 7/0	Han® Q 12/0	
Number of contacts	5 + ⏚	7 + ⏚	12 + ⏚	
Termination	Quick Lock termination 	Crimp terminal 	Crimp termination/ Quick Lock termination 	
Rated current Rated voltage Wire gauge	16 A 230 / 400 V 0.5 ... 2.5 mm²	10 A 400 V 0.14 ... 2.5 mm²	10 A 400 V 0.14 ... 2.5 mm²	
Male insert (M)	09 12 005 2633	09 12 007 3001	09 12 012 3001	
Female insert (F)	09 12 005 2733	09 12 007 3101	09 12 012 3101	

Series	Han-Brid® RJ45 C	Han-Brid® RJ45 C	Han-Brid® RJ45 C	Han-Brid® RJ45 C
Number of contacts	2 / 8	2 / 8	2 / 8	2 / 8
Termination	Crimp terminal / RJ45 	Crimp terminal / RJ45 	Crimp terminal / RJ45 	Crimp terminal / RJ45 
Rated current Rated voltage Wire gauge	10 A 24 V 0.14 ... 2.5 mm²	10 A 24 V 0.14 ... 2.5 mm²	10 A 24 V 0.14 ... 2.5 mm²	10 A 24 V 0.14 ... 2.5 mm²
Male insert (M)	09 12 003 3021	09 12 003 3031		
Female insert (F)			09 12 003 2774	09 12 003 2776

By using in Han-*Yellock*® 10 hoods/housings the seal on the insert has to be removed.

Inserts for adapter frames

Series	Han® CC Protected module	Han® CD module	Han E® module	Han® E Quick Lock module
Number of contacts	4	3	6	6
Modules	Crimp terminal	Crimp terminal	Crimp terminal	Quick Lock termination
				
Rated current	40 A	40 A	16 A	16 A
Rated voltage	830 V	830 V	500 V	500 V
Wire gauge	1.5 ... 6 mm²	1.5 ... 6 mm²	0.14 ... 4 mm²	0.5 ... 2.5 mm²

Series	Han® EE module	Han® EE Quick Lock module	Han E® Protected module	Han® EEE module
Number of contacts	8	8	6	20
Modules	Crimp terminal	Quick Lock termination	Crimp terminal	Crimp terminal
				
Rated current	16 A	16 A	16 A	16 A
Rated voltage	400 V	400 V	830 V	500 V
Wire gauge	0.14 ... 4 mm²	0.5 ... 2.5 mm²	0.14 ... 4 mm²	0.14 ... 4 mm²

Series	Han® ES module	Han DD® module	Han DD® Quick Lock module	Han® DDD module
Number of contacts	5	12	12	17
Modules	Cage-clamp terminal	Crimp terminal	Quick Lock termination	Crimp terminal
			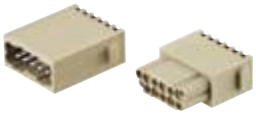	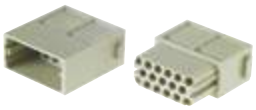
Rated current	16 A	10 A	10 A	10 A
Rated voltage	400 V	250 V	250 V	160 V
Wire gauge	0.14 ... 2.5 mm²	0.14 ... 2.5 mm²	0.25 ... 1.5 mm²	0.14 ... 2.5 mm²

Series	Han® High Density module	Han® D-Sub module		
Number of contacts	25	9		
Modules	Crimp terminal	Crimp terminal		
				
Rated current	4 A	5 A		
Rated voltage	50 V	50 V		
Wire gauge	0.08 ... 0.52 mm²	0.08 ... 0.52 mm²		

For more technical details see chapter 06

Inserts for adapter frames

Series	Han® USB module	Han® GigaBit module		
Number of contacts	4	8		
Modules	USB 2.0 	Ethernet Cat. 6 		

Series	Han-Quintax® module				Han® Multi module
Number of contacts	2				
Modules					
Contacts	Han-Quintax® contact 4 + shielding 	High Density Quintax contact 8 + shielding 	Han D® Coax contact 75 Ω 1 + shielding  75 Ω	Han E® Coax contact 50 Ω 1 + shielding  50 Ω	Coaxial contact  50 Ω RG 174 75 Ω RG 179 50 Ω RG 58

For more technical details see chapter 06

Features

- Snap-in assembly from mating side and from termination side
- Bus bar within bridge attachements
- Finger safe design
- Fast and tool-less assembly
- Mating compatible to the crimp version

Technical characteristics

Number of contacts	5
Electrical data acc. to IEC 61984	20 A 500 V 6 kV 3, 10 A 500 V 6 kV 3
Rated current	20 A, 10 A
Rated voltage	500 V
Rated impulse voltage	6 kV
Pollution degree	3
Insulation resistance	$\geq 10^{10}$ Ω
Contact resistance	≤2 mΩ
Limiting temperature	-40 ... +125 °C
Mating cycles	≥500
Material (insert)	Polycarbonate
Colour (insert)	RAL 7032 (pebble grey)
Material (contacts)	Copper alloy
Material flammability class acc. to UL 94	V-0
RoHS	compliant with exemption, compliant
RoHS exemptions	**6c:** Copper alloy containing up to 4 % lead by weight

Derating

Current carrying capacity

The current carrying capacity of the connectors is limited by the thermal load capability of the contact element material including the connections and the insulating parts. The derating curve is therefore valid for currents which flow constantly (non-intermittent) through each contact element of the connector evenly, without exceeding the allowed maximum temperature.

Measuring and testing techniques acc. to IEC 60512-5-2

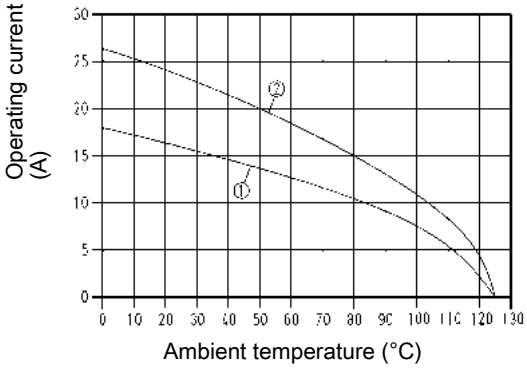

① Conductor cross-section 1.5 mm²
② Conductor cross-section 2.5 mm²
for connector with 3 Han-*Yellock*® modules, fully loaded (multiplier 1:1)

Specifications and approvals

EN 60664-1
IEC 61984
UL 1977 ECBT2.E235076
DNV GL

Details

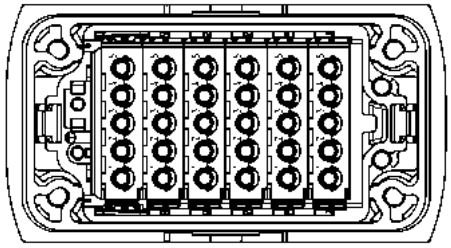

Placement for Han-*Yellock*® 60 with 6 Han-*Yellock*® modules

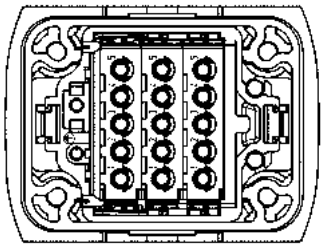

Placement for Han-*Yellock*® 30 with 3 Han-*Yellock*® modules

Quick Lock module

Number of contacts

5

20 A 500 V 6 kV 3

Identification	Conductor cross-section (mm²)	Part number	Drawing (dimensions in mm)
Han-*Yellock*® , Module, Han-Quick Lock® termination, 20 A Contact surface: Silver plated  Blue slide	0,5 ... 2,5	11 05 105 2633	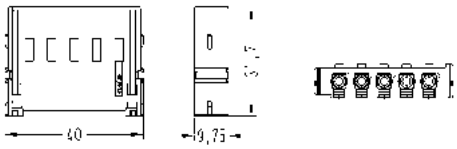 Stripping length 10 mm
Han-*Yellock*® , Module, Han-Quick Lock® termination, 10 A Contact surface: Silver plated  Black slide	0,25 ... 1,5	11 05 105 2634	

Features

- Snap-in assembly from mating side and from termination side
- Wiring with male contacts only
- Bus bar within bridge attachements
- Finger safe design
- Fast and tool-less assembly

Technical characteristics

Number of contacts	5
Electrical data acc. to IEC 61984	20 A 500 V 6 kV 3
Rated current	20 A
Rated voltage	500 V
Rated impulse voltage	6 kV
Pollution degree	3
Insulation resistance	≥10^{10} Ω
Contact resistance	≤2 mΩ
Limiting temperature	-40 ... +125 °C
Mating cycles	≥500
Material (insert)	Polycarbonate
Colour (insert)	RAL 7032 (pebble grey), RAL 5015 (sky blue), RAL 3000 (flame red)
Material (contacts)	Copper alloy
Material flammability class acc. to UL 94	V-0
RoHS	compliant, compliant with exemption
RoHS exemptions	**6c:** Copper alloy containing up to 4 % lead by weight

Derating

Current carrying capacity

The current carrying capacity of the connectors is limited by the thermal load capability of the contact element material including the connections and the insulating parts. The derating curve is therefore valid for currents which flow constantly (non-intermittent) through each contact element of the connector evenly, without exceeding the allowed maximum temperature.

Measuring and testing techniques acc. to IEC 60512-5-2

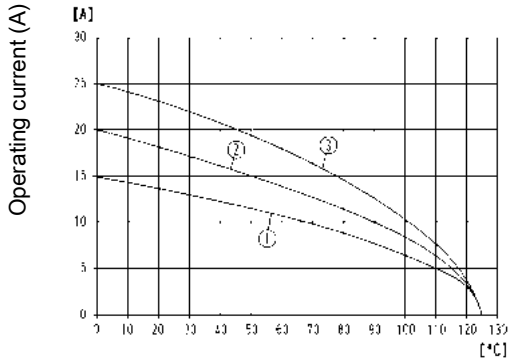

Ambient temperature (°C)

① Conductor cross-section 1.5 mm²
② Conductor cross-section 2.5 mm²
③ Conductor cross-section 4 mm²
for connector with 3 Han-*Yellock*® modules, fully loaded (multiplier 1:1)

Specifications and approvals

EN 60664-1
IEC 61984
DNV GL

Details

Crimping tools see chapter 90

Remarks on the crimp technique

The wire gauges mentioned in the catalogue refer to geometric wire gauges of cables.

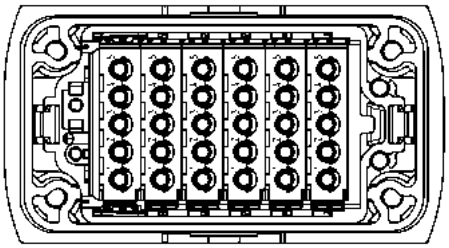

Placement for Han-*Yellock*® 60 with 6 Han-*Yellock*® modules

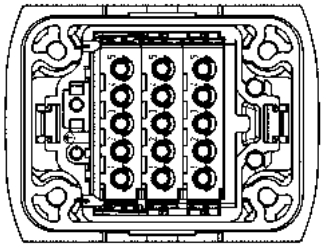

Placement for Han-*Yellock*® 30 with 3 Han-*Yellock*® modules

Crimp module

Number of contacts

5

20 A 500 V 6 kV 3

Identification	Conductor cross-section (mm²)	Part number	Drawing (dimensions in mm)
Han-*Yellock*® , Module, Crimp termination, Contact surface: Silver plated 	0,14 ... 4 0,14 ... 4 0,14 ... 4	11 05 105 3001 11 05 105 3011 11 05 105 3012	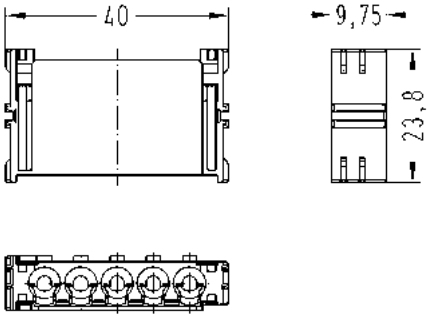 11 05 105 3001 Grey 11 05 105 3011 Blue 11 05 105 3012 Red
Han-*Yellock*® , Crimp contact, Contact surface: Silver plated 	0,14 ... 0,37 0,5 0,75 1 1,5 2,5 3 4	11 05 000 6101 11 05 000 6102 11 05 000 6103 11 05 000 6104 11 05 000 6105 11 05 000 6106 11 05 000 6107 11 05 000 6108	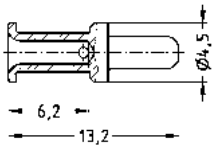
Han-*Yellock*® , Crimp contact, Contact surface: Gold plated 	0,14 ... 0,37 0,5 0,75 1 1,5 2,5 3 4	11 05 000 6121 11 05 000 6122 11 05 000 6123 11 05 000 6124 11 05 000 6125 11 05 000 6126 11 05 000 6127 11 05 000 6128	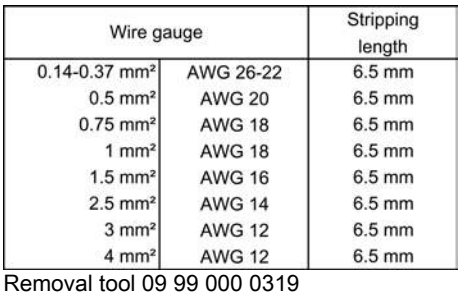 Removal tool 09 99 000 0319 See chapter 90

Multiplier block

Features

- Up to 3 Han-Yellock® multipliers can be used in one multiplier bloc
- By using the multipliers, the potential of one up to five contacts can be multiplied
- Needs 3 places in the Han-Modular® Docking frame and Hinged frame
- Wiring with male contacts only

Technical characteristics

Number of contacts	15
Electrical data acc. to IEC 61984	16 A 500 V 6 kV 3
Rated current	16 A
Rated voltage	500 V
Rated impulse voltage	6 kV
Pollution degree	3
Insulation resistance	≥10^{10} Ω
Contact resistance	≤1 mΩ
Limiting temperature	-40 ... +125 °C
Mating cycles	≥500
Material (insert)	Polycarbonate
Colour (insert)	RAL 7032 (pebble grey)
Material (contacts)	Copper alloy
Material flammability class acc. to UL 94	V-0
RoHS	compliant, compliant with exemption
RoHS exemptions	**6c:** Copper alloy containing up to 4 % lead by weight

Specifications and approvals

EN 60664-1
IEC 61984

Details

Crimping tools see chapter 90

Remarks on the crimp technique

The wire gauges mentioned in the catalogue refer to geometric wire gauges of cables.

Multiplier block

Number of contacts

15

16 A 500 V 6 kV 3



Identification	Conductor cross-section (mm²)	Part number Male	Part number Female	Drawing (dimensions in mm)
Han-*Yellock*® , Multiplier block, Crimp termination  Please order crimp contacts separately.	0,14 ... 4	09 14 015 3001	09 14 015 3101	
Han E® , Crimp contact, Contact surface: Silver plated 	0,14 ... 0,37 0,5 0,75 1 1,5 2,5 3 4	09 33 000 6127 09 33 000 6121 09 33 000 6114 09 33 000 6105 09 33 000 6104 09 33 000 6102 09 33 000 6106 09 33 000 6107		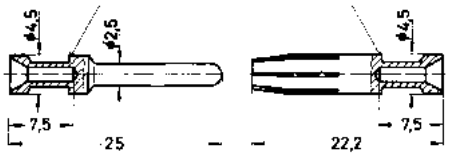

Multiplier

Features

- Snap-in assembly from mating side and from termination side
- Bus bar within bridge attachements
- Visible bridge position from mating side and from termination side
- Fast and easy exchange

Technical characteristics

Number of contacts	5
Insulation resistance	≥10^{10} Ω
Limiting temperature	-40 ... +125 °C
Mating cycles	≥500
Material (insert)	Polycarbonate
Colour (insert)	RAL 7032 (pebble grey), RAL 3000 (flame red), RAL 5015 (sky blue)
Material flammability class acc. to UL 94	V-0
RoHS	compliant

Specifications and approvals

EN 60664-1
IEC 61984
UL 1977 ECBT2.E235076
DNV GL

Multiplier

Number of contacts

5

Identification	Part number	Drawing (dimensions in mm)
Han-*Yellock*® , Multiplier, 0 Bridged contacts, 5 Unbridged contacts 	11 05 105 2801	Circuit diagram 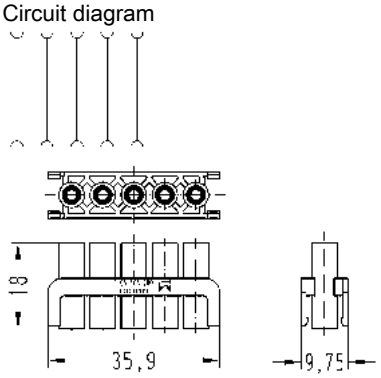
Han-*Yellock*® , Multiplier, 2 Bridged contacts, 3 Unbridged contacts 	11 05 105 2802	Circuit diagram 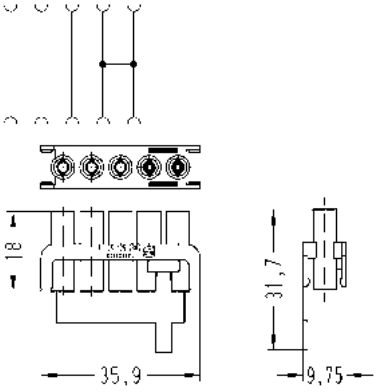
Han-*Yellock*® , Multiplier, 3 Bridged contacts, 2 Unbridged contacts 	11 05 105 2803	Circuit diagram 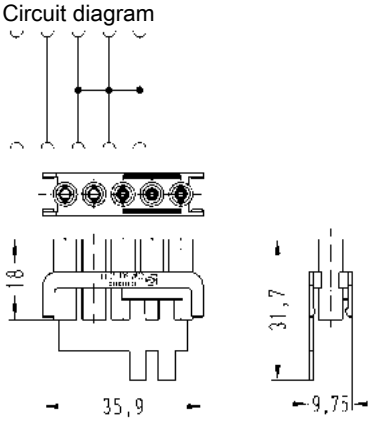

Multiplier

Identification	Part number	Drawing (dimensions in mm)
Han-*Yellock*® , Multiplier, 4 Bridged contacts, 1 Unbridged contacts 	11 05 105 2804	Circuit diagram 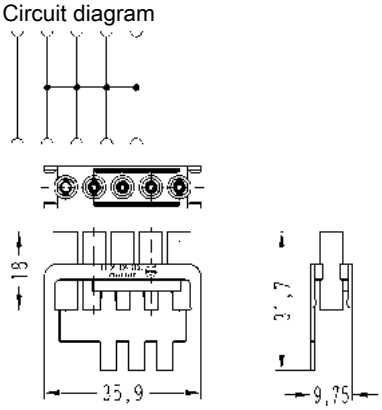
Han-*Yellock*® , Multiplier, 5 Bridged contacts, 0 Unbridged contacts 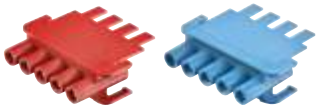	11 05 105 2805 11 05 105 2815	Circuit diagram 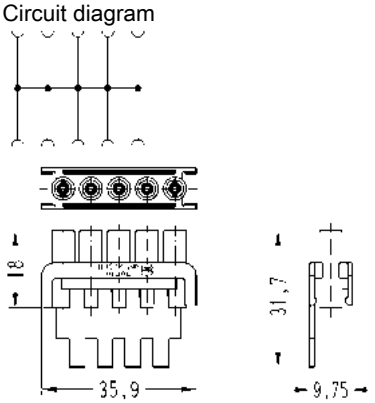 11 05 105 2805 Red 11 05 105 2815 Blue
Han-*Yellock*® , Multiplier, 2 Bridged contacts, 3 Bridged contacts 	11 05 105 2823	Circuit diagram 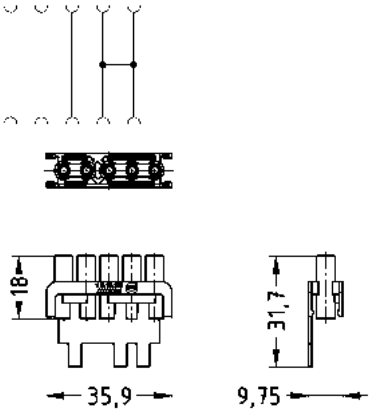

Features

- Suitable for Han-Modular® modules
- Fast and tool-less assembly
- Snap-in assembly from mating side and from termination side
- Removal from mating side and from termination side possible

Technical characteristics

Material (accessories)	Polycarbonate
Colour (accessories)	RAL 7032 (pebble grey)
Material flammability class acc. to UL 94	V-0
RoHS	compliant

Specifications and approvals

EN 60664-1
IEC 61984
DNV GL

Details

Han-Yellock® adapter frame

Han-Modular® series interfaces can be established using the Han-*Yellock*® adapter frame. The connection is based on a male/female contact arrangement.

Inserting the adapter frame in the housing:

The adapter frame can be snapped into the housing, bulkhead mounting, on the termination side and the mating side (refer to the illustration).

The lateral plastic tabs („B“) are pressed into the metal clamps on the housing.

The adapter frame then snaps in with a distinctly audible click.

① metal clamp

Removal of the adapter frame

The removal tool part no. 11 99 000 0001 is required for disassembly. (see chapter 90)

The removal tool is inserted into the metal clamp and pressed down as shown in the following illustration. A screwdriver need also be placed into the notch in the housing.

The removal tool should then be pulled outwards to remove the adapter frame from the housing.

The removal can be made from the termination side as well as from the mating side.

The process is identical for both housings, bulkhead mounting, and carrier hoods.

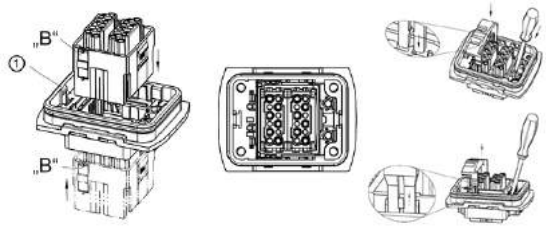

Adapter frames

Identification	Part number	Drawing (dimensions in mm)
Han-*Yellock*® , Adapter frames, for bulkhead mounted housings, for Han-*Yellock*® 30, for Han-*Yellock*® 60  Mounting/removal from termination side only!	11 00 200 0301	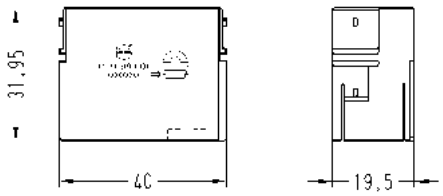
Han-*Yellock*® , Adapter frames, for bulkhead mounted housings, for Han-*Yellock*® 30 	11 00 300 0301	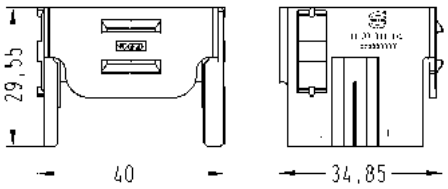
Han-*Yellock*® , Adapter frames, for bulkhead mounted housings, for Han-*Yellock*® 60 	11 00 600 0301	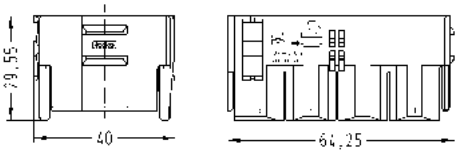
Han-*Yellock*® , Adapter frames, for carrier hoods, for Han-*Yellock*® 30, for Han-*Yellock*® 60  Mounting/removal from termination side only!	11 00 200 0101	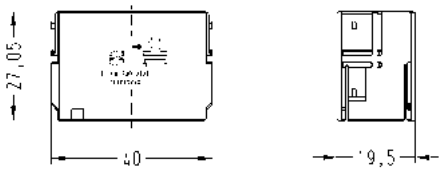

Adapter frames

Identification	Part number	Drawing (dimensions in mm)
Han-*Yellock*® , Adapter frames, for carrier hoods, for Han-*Yellock*® 30 	11 00 300 0101	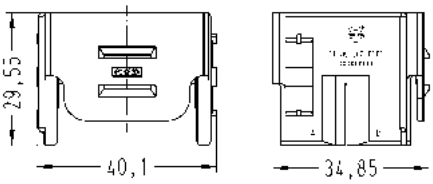
Han-*Yellock*® , Adapter frames, for carrier hoods, for Han-*Yellock*® 60 	11 00 600 0101	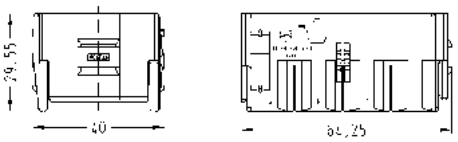

Combinations	Han-Yellock® Hood/Housing				
	30	30	60	60	60
Han-Yellock® 20 Adapter frame (for Han-Yellock® 30 und 60)	1		2	1	
Han-Yellock® 30 Adapter frame		1			
Han-Yellock® 60 Adapter frame					1
Han-Yellock® Module	1		2	4	

Features

- Snap-in assembly from mating side and from termination side
- Finger safe design
- Fast and tool-less assembly

Technical characteristics

Number of contacts	25, 48
Electrical data acc. to IEC 61984	16 A 500 V 6 kV 3
Rated current	16 A
Rated voltage	500 V
Rated impulse voltage	6 kV
Pollution degree	3
Insulation resistance	≥10^{10} Ω
Contact resistance	≤2 mΩ
Limiting temperature	-40 ... +125 °C
Mating cycles	≥500
Material (insert)	Polycarbonate
Colour (insert)	RAL 7032 (pebble grey)
Material (contacts)	Copper alloy
Material flammability class acc. to UL 94	V-0
RoHS	compliant, compliant with exemption
RoHS exemptions	**6c:** Copper alloy containing up to 4 % lead by weight

Derating

Current carrying capacity

The current carrying capacity of the connectors is limited by the thermal load capability of the contact element material including the connections and the insulating parts. The derating curve is therefore valid for currents which flow constantly (non-intermittent) through each contact element of the connector evenly, without exceeding the allowed maximum temperature.

Measuring and testing techniques acc. to IEC 60512-5-2

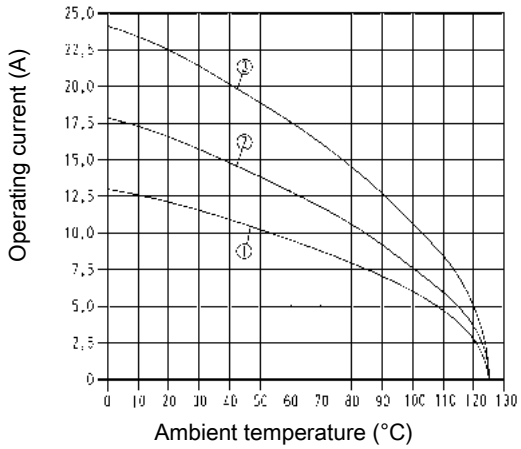

① Conductor cross-section 1.5 mm²
② Conductor cross-section 2.5 mm²
③ Conductor cross-section 4 mm²

Derating

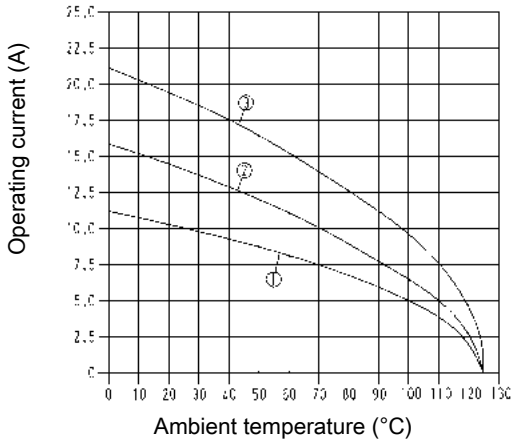

① Conductor cross-section 1.5 mm²
② Conductor cross-section 2.5 mm²
③ Conductor cross-section 4 mm²

Specifications and approvals

EN 60664-1
IEC 61984
UL 1977 ECBT2.E235076
DNV GL

Details

Crimping tools see chapter 90

Remarks on the crimp technique

The wire gauges mentioned in the catalogue refer to geometric wire gauges of cables.

Number of contacts

25

16 A 500 V 6 kV 3

Identification	Conductor cross-section (mm²)	Part number Male	Part number Female	Drawing (dimensions in mm)
Han-*Yellock*® , Monoblock, Crimp termination  Please order crimp contacts separately. ATTENTION! It is not possible to use 2 monoblocks 30 in the Han-*Yellock*® 60 series!	0,14 ... 4	11 05 325 3001	11 05 325 3101	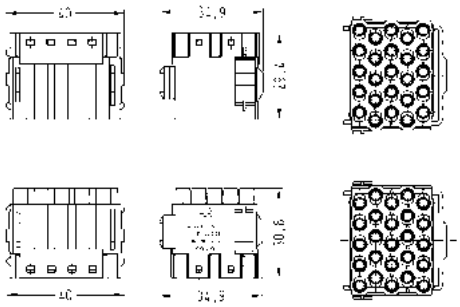
Han-*Yellock*® , Crimp contact, Contact surface: Silver plated 	0,14 ... 0,37 0,5 0,75 1 1,5 2,5 3 4	11 05 000 6101 11 05 000 6102 11 05 000 6103 11 05 000 6104 11 05 000 6105 11 05 000 6106 11 05 000 6107 11 05 000 6108	11 05 000 6201 11 05 000 6202 11 05 000 6203 11 05 000 6204 11 05 000 6205 11 05 000 6206 11 05 000 6207 11 05 000 6208	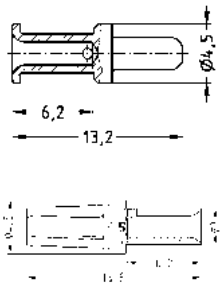
Han-*Yellock*® , Crimp contact, Contact surface: Gold plated 	0,14 ... 0,37 0,5 0,75 1 1,5 2,5 3 4	11 05 000 6121 11 05 000 6122 11 05 000 6123 11 05 000 6124 11 05 000 6125 11 05 000 6126 11 05 000 6127 11 05 000 6128	11 05 000 6221 11 05 000 6222 11 05 000 6223 11 05 000 6224 11 05 000 6225 11 05 000 6226 11 05 000 6227 11 05 000 6228	

Wire gauge		Stripping length
0.14-0.37 mm²	AWG 26-22	6.5 mm
0.5 mm²	AWG 20	6.5 mm
0.75 mm²	AWG 18	6.5 mm
1 mm²	AWG 18	6.5 mm
1.5 mm²	AWG 16	6.5 mm
2.5 mm²	AWG 14	6.5 mm
3 mm²	AWG 12	6.5 mm
4 mm²	AWG 12	6.5 mm

Removal tool 09 99 000 0319
See chapter 90

Number of contacts

48

16 A 500 V 6 kV 3

Identification	Conductor cross-section (mm²)	Part number Male	Part number Female	Drawing (dimensions in mm)
Han-*Yellock*® , Monoblock, Crimp termination  Please order crimp contacts separately.	0,14 ... 4	11 05 648 3001	11 05 648 3101	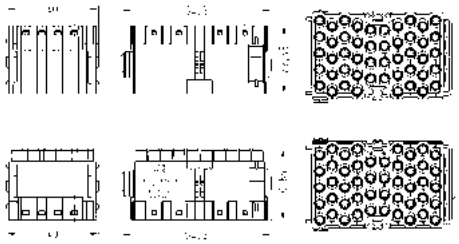
Han-*Yellock*® , Crimp contact, Contact surface: Silver plated 	0,14 ... 0,37 0,5 0,75 1 1,5 2,5 3 4	11 05 000 6101 11 05 000 6102 11 05 000 6103 11 05 000 6104 11 05 000 6105 11 05 000 6106 11 05 000 6107 11 05 000 6108	11 05 000 6201 11 05 000 6202 11 05 000 6203 11 05 000 6204 11 05 000 6205 11 05 000 6206 11 05 000 6207 11 05 000 6208	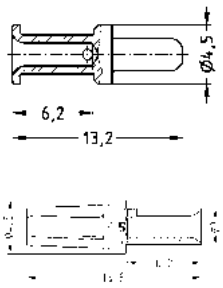
Han-*Yellock*® , Crimp contact, Contact surface: Gold plated 	0,14 ... 0,37 0,5 0,75 1 1,5 2,5 3 4	11 05 000 6121 11 05 000 6122 11 05 000 6123 11 05 000 6124 11 05 000 6125 11 05 000 6126 11 05 000 6127 11 05 000 6128	11 05 000 6221 11 05 000 6222 11 05 000 6223 11 05 000 6224 11 05 000 6225 11 05 000 6226 11 05 000 6227 11 05 000 6228	

Wire gauge		Stripping length
0.14-0.37 mm²	AWG 26-22	6.5 mm
0.5 mm²	AWG 20	6.5 mm
0.75 mm²	AWG 18	6.5 mm
1 mm²	AWG 18	6.5 mm
1.5 mm²	AWG 16	6.5 mm
2.5 mm²	AWG 14	6.5 mm
3 mm²	AWG 12	6.5 mm
4 mm²	AWG 12	6.5 mm

Removal tool 09 99 000 0319
See chapter 90

Han-*Yellock*® 10 hoods/housings

Features

- Hoods/housings for industrial applications
- Highly EMC resistant
- High robustness due to internal locking mechanism
- Compatible with inserts size Han® 3 A

Technical characteristics

Un-/locking temperature	-10 ... +85 °C
Limiting temperature	-40 ... +125 °C
Mating cycles	≥500
Degree of protection acc. to IEC 60529	IP65, IP67
Material (hood/housing)	Zinc die-cast
Surface (hood/housing)	Powder-coated, Zinc passivation
Colour (hood/housing)	RAL 7021 (black grey), Metallic
Material (seal)	NBR
Material (locking)	Polyamide, Stainless steel
Colour (locking)	Melon yellow
Material flammability class acc. to UL 94	V-0
RoHS	compliant

Specifications and approvals

EN 60664-1
IEC 61984
DNV GL

Details

For use with inserts Han® Q, the seal on the insert has to be removed.

Hoods/housings for industrial applications
Push button

Identification	Cable entry	Part number	Drawing (dimensions in mm)
Han-*Yellock*® , Hoods, Top entry 	1x M20 1x M25	11 20 003 1400 11 20 003 1401	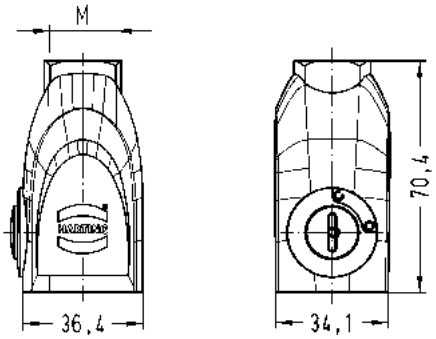
Han-*Yellock*® , Hoods, Side entry 	1x M20 1x M25	11 20 003 1600 11 20 003 1601	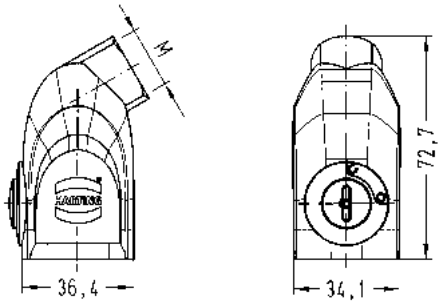
Han-*Yellock*® , Bulkhead mounted housings, Straight 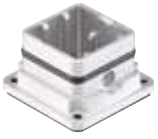		11 20 003 0300	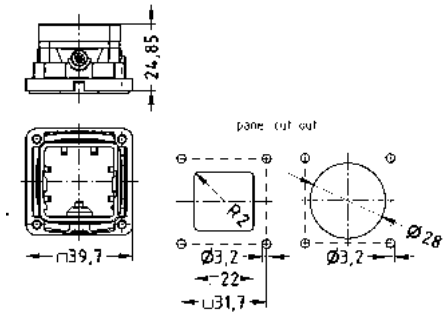
Han-*Yellock*® , Bulkhead mounted housings, Angled 		11 20 003 0800	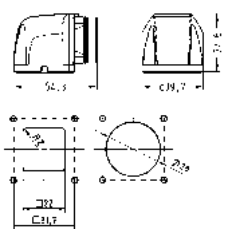

Han-*Yellock*® 10 hoods/housings

Size Han-*Yellock*® 10

Identification	Cable entry	Part number	Drawing (dimensions in mm)
Han-*Yellock*® , Protection cover, for hoods, Thermoplastic 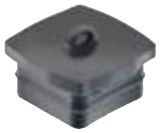		11 20 003 5456	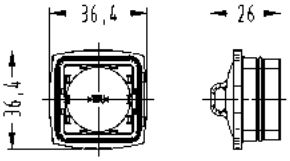
Han-*Yellock*® , Protection cover, for bulkhead mounted housings, Thermoplastic, With seal 		11 20 003 5406	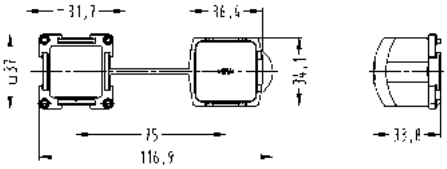
Han-*Yellock*® , Protection cover, for bulkhead mounted housings, Thermoplastic 		11 20 003 5407	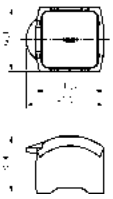

Features

- for three Han-*Yellock*® modules
- High robustness due to internal locking mechanism
- Two-part hood
- Earthed contacts PE in crimped or Han-Quick Lock® termination
- Protection cover retrofit on housing side

Technical characteristics

Un-/locking temperature	-10 ... +85 °C
Limiting temperature	-40 ... +125 °C
Mating cycles	≥500
Degree of protection acc. to IEC 60529	IP65, IP67
Material (hood/housing)	Zinc die-cast, Aluminium die-cast
Surface (hood/housing)	Zinc passivation, Powder-coated, Passivated
Colour (hood/housing)	Metallic, RAL 7021 (black grey), RAL 9005 (jet black)
Material (seal)	NBR
Material (locking)	Polyamide, Stainless steel
Colour (locking)	Melon yellow
Material flammability class acc. to UL 94	V-0
RoHS	compliant

Specifications and approvals

EN 60664-1
IEC 61984
DNV GL

Details

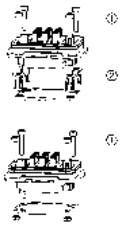

① M4 fixing screw (screw length > 20 mm, tightening torque: 1Nm)
② Panel fastener (tightening torque: 2.3 Nm)

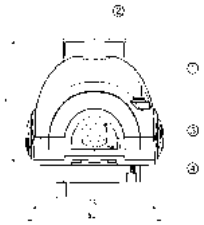

① Shell with top entry
② Cable entry M20 ... M40
③ Carrier hood with push button release
④ Bulkhead mounted housings

Hoods/housings for industrial applications

Identification	Cable entry	Part number	Drawing (dimensions in mm)
Han-*Yellock*® , Bulkhead mounted housings 		11 12 300 0301	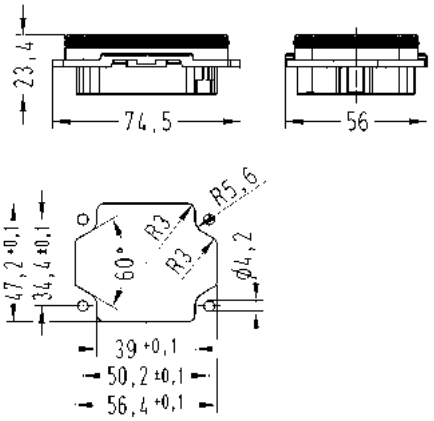
Han-*Yellock*® , Bulkhead mounted housings, Pack contents: incl. 4 panel fastener 		11 12 300 0302	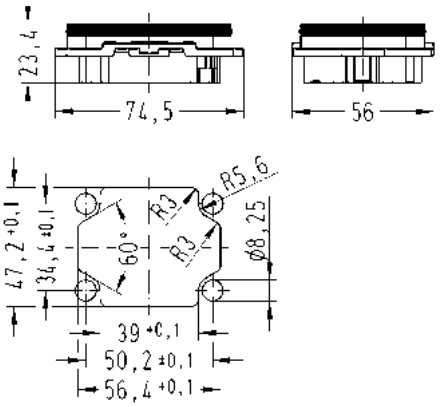
Han-*Yellock*® , Surface mounted housing, Side entry 	1x M20 1x M25 1x M32 2x M20 2x M25 2x M32	11 12 300 1200 11 12 300 1201 11 12 300 1202 11 12 300 1204 11 12 300 1205 11 12 300 1206	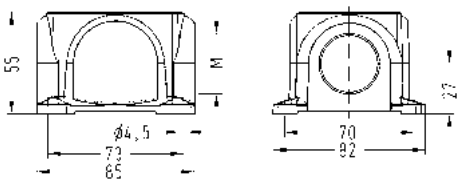

Identification	Cable entry	Part number	Drawing (dimensions in mm)
Han-*Yellock*® , Surface mounted housing, incl. bulkhead mounted housings, Side entry 	1x M20 1x M25 1x M32 2x M20 2x M25 2x M32	11 12 300 1210 11 12 300 1211 11 12 300 1212 11 12 300 1214 11 12 300 1215 11 12 300 1216	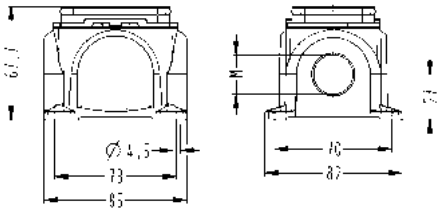
Han-*Yellock*® , Panel feed through housing, Top entry 	1x M32	11 12 300 1702	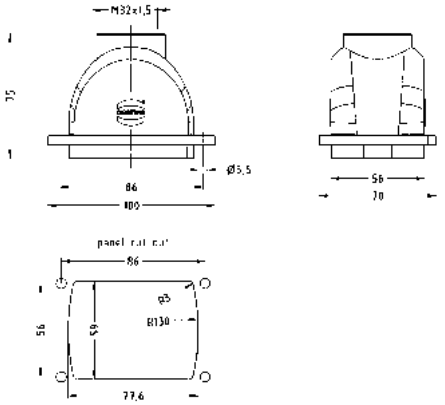
Han-*Yellock*® , Protection cover, for bulkhead mounted housings, Thermoplastic 		11 12 300 5401	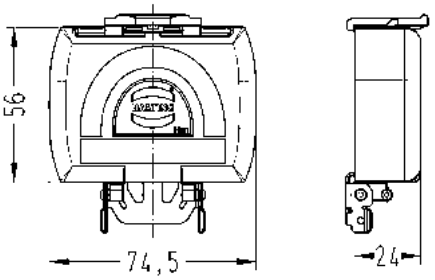

Hoods/housings for industrial applications
Push button

Identification	Cable entry	Part number	Drawing (dimensions in mm)
Han-*Yellock*® , Shell, Top entry 	1x M20 1x M25 1x M32	11 12 300 1400 11 12 300 1401 11 12 300 1402	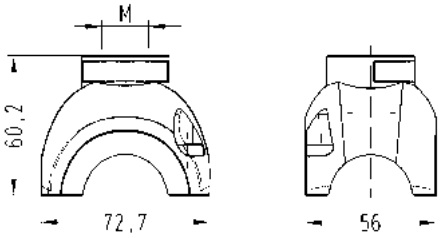
Han-*Yellock*® , Shell, Side entry 	1x M20 1x M25 1x M32	11 12 300 1500 11 12 300 1501 11 12 300 1502	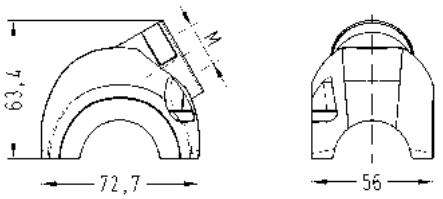
Han-*Yellock*® , Shell, White, Side entry 	1x M20	11 12 300 1510	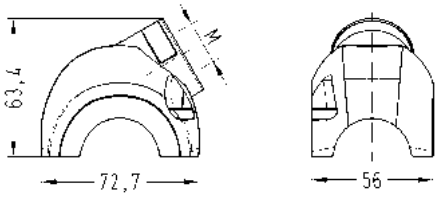
Han-*Yellock*® , Shell, EMC version, Side entry 	1x M25	11 12 300 1581	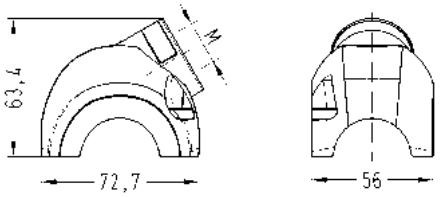
Han-*Yellock*® , Shell, Angled entry 	1x M20 1x M25 1x M32	11 12 300 1600 11 12 300 1601 11 12 300 1602	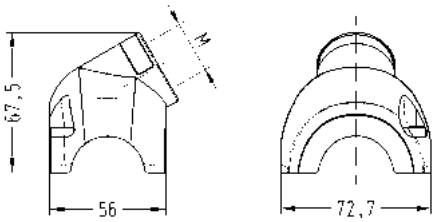

Identification	Cable entry	Part number	Drawing (dimensions in mm)
Han-*Yellock*® , Carrier hood, Plain push button 		11 12 300 0100	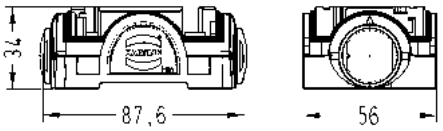
Han-*Yellock*® , Carrier hood, Push button, slot 		11 12 300 0110	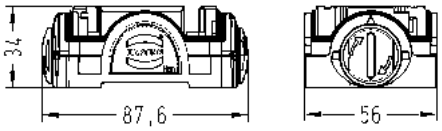
Han-*Yellock*® , Protection cover, for carrier hoods, With fixing cord, Thermoplastic 		11 12 300 5451	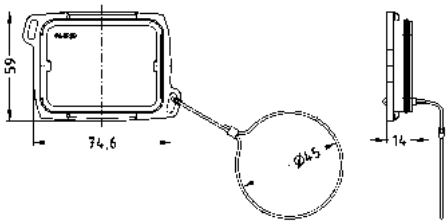

Hoods/housings for outdoor applications

Identification	Part number	Drawing (dimensions in mm)
Han-*Yellock*® , Bulkhead mounted housings 	11 13 300 0301	
Han-*Yellock*® , Bulkhead mounted housings, Pack contents: incl. 4 panel fastener 	11 13 300 0302	

Hoods/housings for outdoor applications
Push button

Identification	Cable entry	Part number	Drawing (dimensions in mm)
Han-*Yellock*® , Shell, Top entry 	1x M25	11 13 300 1401	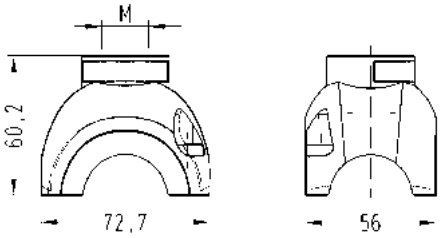
Han-*Yellock*® , Shell, Side entry 	1x M25	11 13 300 1501	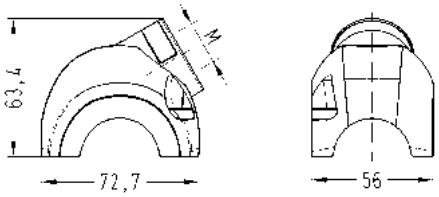
Han-*Yellock*® , Shell, Angled entry 	1x M25	11 13 300 1601	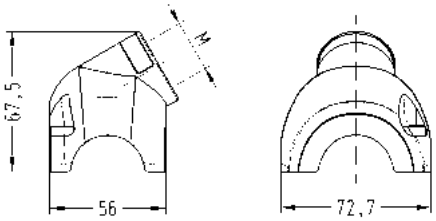
Han-*Yellock*® , Carrier hood, Plain push button 		11 13 300 0100	
Han-*Yellock*® , Carrier hood, Push button, slot 		11 13 300 0110	

Han-*Yellock*® 60 hoods/housings

Features

- for six Han-*Yellock*® modules
- High robustness due to internal locking mechanism
- Two-part hood
- Earthed contacts PE in crimped or Han-Quick Lock® termination
- Protection cover retrofit on housing side

Technical characteristics

Un-/locking temperature	-10 ... +85 °C
Limiting temperature	-40 ... +125 °C
Mating cycles	≥500
Degree of protection acc. to IEC 60529	IP65, IP67
Material (hood/housing)	Zinc die-cast, Aluminium die-cast
Surface (hood/housing)	Passivated, Powder-coated
Colour (hood/housing)	Metallic, RAL 7021 (black grey), RAL 9005 (jet black)
Material (seal)	NBR
Material (locking)	Polyamide, Stainless steel
Colour (locking)	Melon yellow
Material flammability class acc. to UL 94	V-0
RoHS	compliant

Specifications and approvals

EN 60664-1
IEC 61984
DNV GL

Details

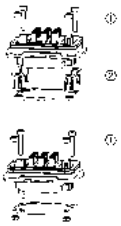

① M4 fixing screw (screw length > 20 mm, tightening torque: 1Nm)
② Panel fastener (tightening torque: 2.3 Nm)

Hoods/housings for industrial applications

Identification	Cable entry	Part number	Drawing (dimensions in mm)
Han-*Yellock*® , Bulkhead mounted housings 		11 12 600 0301	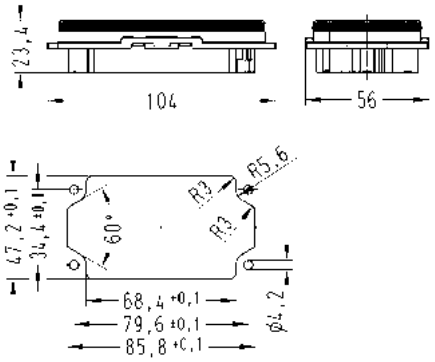
Han-*Yellock*® , Bulkhead mounted housings, Pack contents: incl. 4 panel fastener 		11 12 600 0302	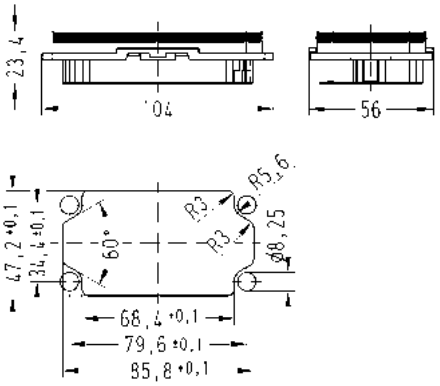
Han-*Yellock*® , Surface mounted housing, Side entry 	1x M25 1x M32 1x M40 2x M25 2x M32 2x M40	11 12 600 1201 11 12 600 1202 11 12 600 1203 11 12 600 1205 11 12 600 1206 11 12 600 1207	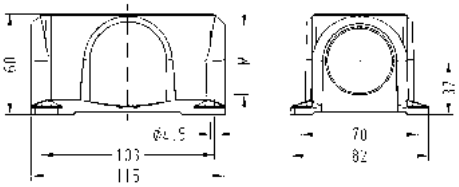
Han-*Yellock*® , Surface mounted housing, incl. bulkhead mounted housings, Side entry 	1x M25 1x M32 1x M40 2x M25 2x M32 2x M40	11 12 600 1211 11 12 600 1212 11 12 600 1213 11 12 600 1215 11 12 600 1216 11 12 600 1217	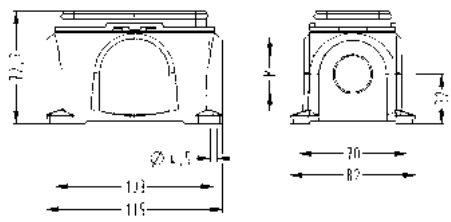

Identification	Cable entry	Part number	Drawing (dimensions in mm)
Han-*Yellock*® , Panel feed through housing, Top entry 	2x M25	11 12 600 1711	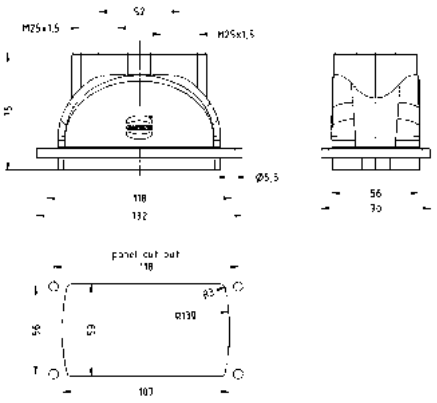
Han-*Yellock*® , Protection cover, for bulkhead mounted housings, Thermoplastic 		11 12 600 5401	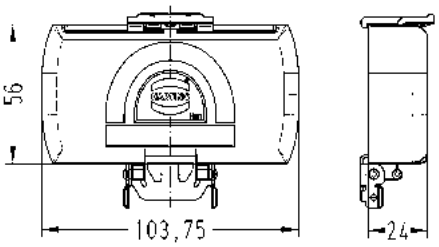

Hoods/housings for industrial applications
Push button

Identification	Cable entry	Part number	Drawing (dimensions in mm)
Han-*Yellock*® , Shell, Top entry 	1x M20, 1x M25 1x M25 1x M32 1x M40 2x M25	11 12 600 1415 11 12 600 1401 11 12 600 1402 11 12 600 1403 11 12 600 1411	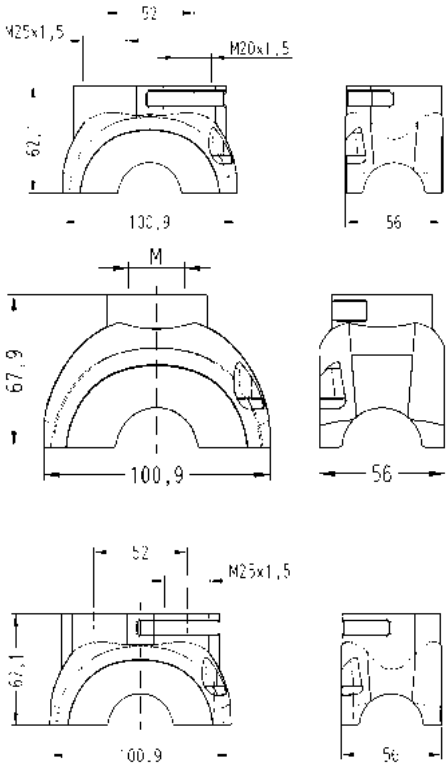
Han-*Yellock*® , Shell, Side entry 	1x M25 1x M32 1x M40	11 12 600 1501 11 12 600 1502 11 12 600 1503	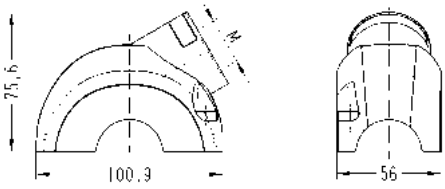
Han-*Yellock*® , Carrier hood, Plain push button 		11 12 600 0100	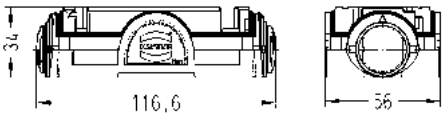

Han-*Yellock*® 60 hoods/housings

Size Han-*Yellock*® 60

Identification	Cable entry	Part number	Drawing (dimensions in mm)
Han-*Yellock*® , Carrier hood, Push button, slot 		11 12 600 0110	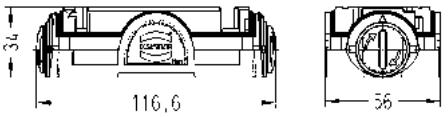
Han-*Yellock*® , Protection cover, for carrier hoods, With fixing cord, Thermoplastic 		11 12 600 5451	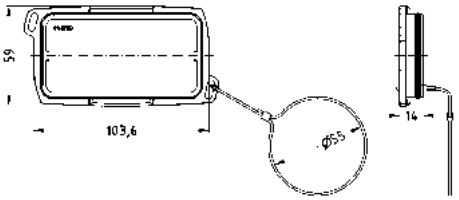

Hoods/housings for outdoor applications

Identification	Part number	Drawing (dimensions in mm)
Han-*Yellock*® , Bulkhead mounted housings 	11 13 600 0301	
Han-*Yellock*® , Bulkhead mounted housings, Pack contents: incl. 4 panel fastener 	11 13 600 0302	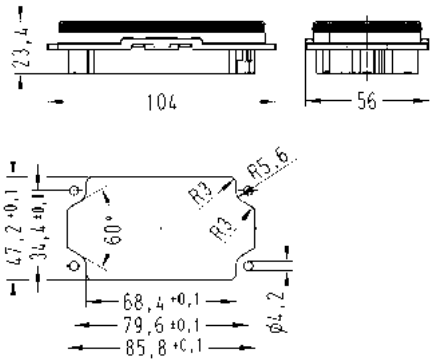

Hoods/housings for outdoor applications
Push button

Identification	Cable entry	Part number	Drawing (dimensions in mm)
Han-*Yellock*® , Shell, Top entry 	1x M32 1x M40	11 13 600 1402 11 13 600 1403	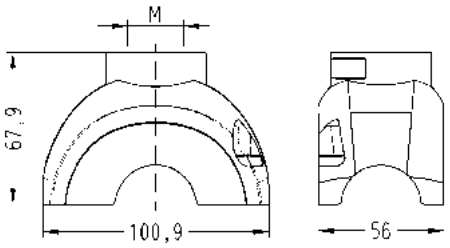
Han-*Yellock*® , Shell, Side entry 	1x M32	11 13 600 1502	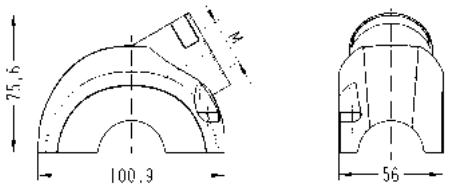
Han-*Yellock*® , Carrier hood, Plain push button 		11 13 600 0100	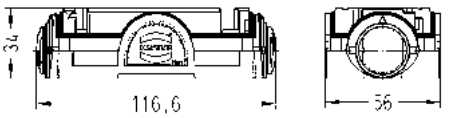
Han-*Yellock*® , Carrier hood, Push button, slot 		11 13 600 0110	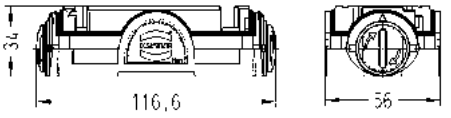

Technical characteristics

Material (seal)	NBR
Colour (seal)	Black

Technical characteristics

Material (accessories)	Steel, zinc plated, Thermoplastic
RoHS	compliant

Identification	Part number	Drawing (dimensions in mm)
Adapter plate, for Han-*Yellock*® 30  Circular 68 mm punch for Han-*Yellock*® panel cut out	11 00 300 9601	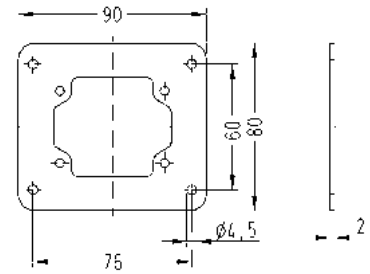
Adapter plate, for Han-*Yellock*® 30, With seal 	11 00 300 9603	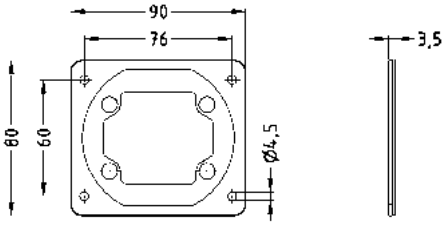
Adapter plate, for Han-*Yellock*® 60 	11 00 600 9601	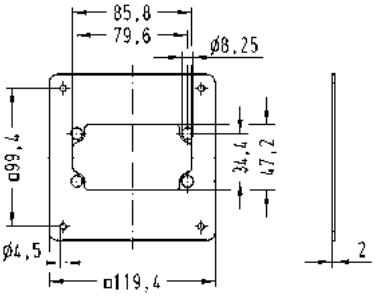

Identification	Part number	Drawing (dimensions in mm)
Adapter plate, for Han-*Yellock*® 60, With seal 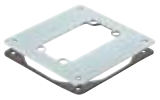	11 00 600 9603	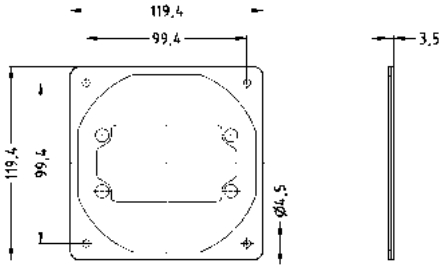
Flange gasket, for Han-*Yellock*® 10 	11 20 003 9904	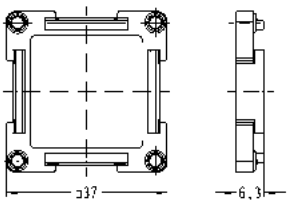
Flange gasket, for Han-*Yellock*® 30 	11 00 300 9503	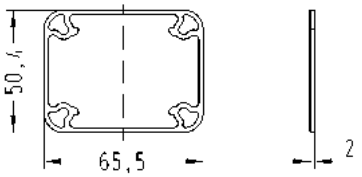
Flange gasket, for Han-*Yellock*® 60 	11 00 600 9503	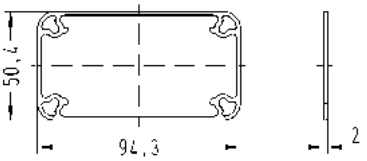
Profile gasket, for Han-*Yellock*® 10 	11 20 003 9905	
Profile gasket, for Han-*Yellock*® 30 	11 00 300 9501	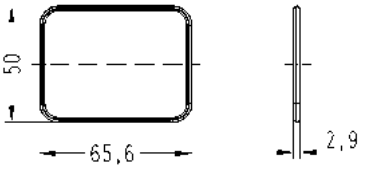
Profile gasket, for Han-*Yellock*® 60 	11 00 600 9501	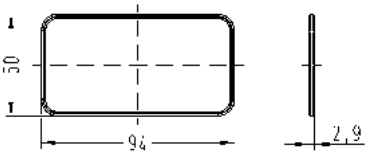

Identification	Part number	Drawing (dimensions in mm)
Shaped gasket, for Han-*Yellock*® 30 	11 00 300 9502	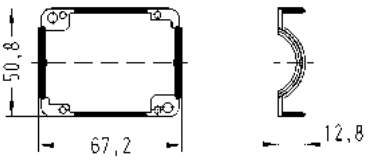
Shaped gasket, for Han-*Yellock*® 60 	11 00 600 9502	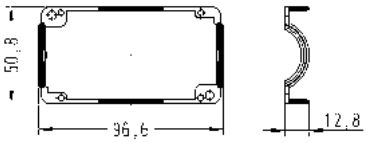
Shielding frame, for Han-*Yellock*® 30, for strain relief clamp 	11 12 300 5201	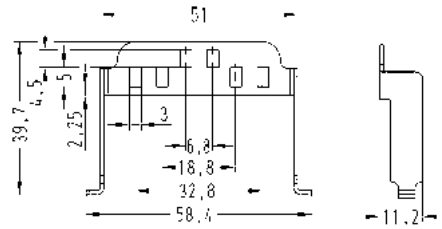
Shielding frame, for Han-*Yellock*® 30, Earthing with saddle terminals 	11 12 300 5202	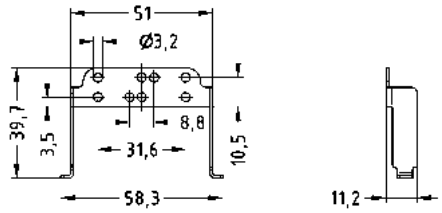
Shielding frame, for Han-*Yellock*® 60, for strain relief clamp 	11 12 600 5201	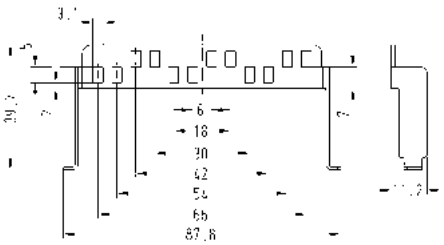
Han-*Yellock*® , Coding element, Pack contents: 8 pieces per frame 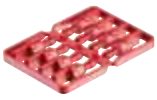	11 00 000 9501	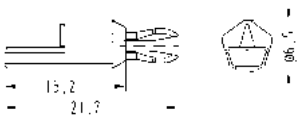

Accessories

Identification	Part number	Drawing (dimensions in mm)
Fixing screws, M3, for Han-*Yellock*® 10 	11 20 003 9903	
Identification strip, Pack contents: 500 pieces on a reel 	11 00 000 9601	
PE / N rail, Suitable for Han-*Yellock*® 30 surface mounted housing, Pack contents: 1 bar with fixing screws 	11 00 000 9512	
PE / N rail, Suitable Han-*Yellock*® 60 surface mounted housing, Pack contents: 1 bar with fixing screws 	11 00 000 9511	

Technical characteristics

Contact resistance	≤2 mΩ
Material (contacts)	Copper alloy
RoHS	compliant with exemption
RoHS exemptions	**6c:** Copper alloy containing up to 4 % lead by weight

Specifications and approvals

EN 60664-1
IEC 61984

Details

Crimping tools see chapter 90

Remarks on the crimp technique
The wire gauges mentioned in the catalogue refer to geometric wire gauges of cables.

Identification	Conductor cross-section (mm²)	Part number	Drawing (dimensions in mm)
Han-*Yellock*® , Crimp termination, PE contact, Contact surface: Silver plated 	6 10	11 00 000 9509 11 00 000 9510	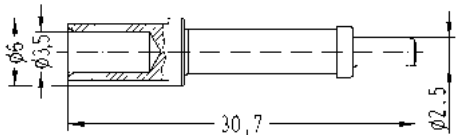 Stripping length 7.5 mm 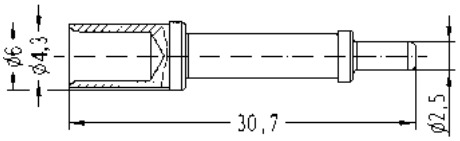 Stripping length 7.5 mm
Han-*Yellock*® , Han-Quick Lock® termination, PE contact chamber, Contact surface: Silver plated 	0,5 ... 2,5	11 05 001 2601	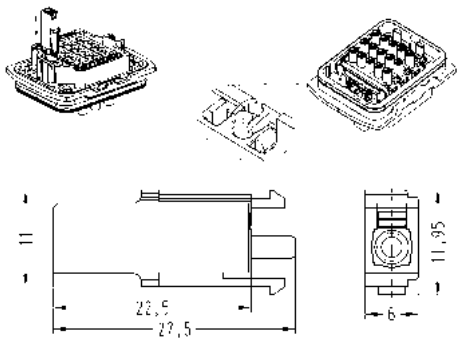 Stripping length 10 mm



The KR 6 R900 sixx (KR AGILUS) with Han-*Yellock*® combines functional design and high technical requirements.

Photo courtesy: KUKA Roboter GmbH

Contents	Page
Modules and monoblocks for Han-Eco® Modular	**29.3**
Han-Eco® Modular for industrial applications	**29.7**
Han-Eco® Modular for outdoor applications	**29.20**
Han-Eco® A for industrial applications	**29.33**
Han-Eco® A for outdoor applications	**29.40**
Han-Eco® B for industrial applications	**29.47**
Han-Eco® B for outdoor applications	**29.73**
Accessories	**29.97**

Han-Eco® Modular
19 41 xxx xxxx





Han-Eco® A
19 46 xxx xxxx





Han-Eco® B
19 43 xxx xxxx













The Han-Eco® B series is a new series of hoods and housings in the Han-Eco® portfolio that comes in sizes 6B – 24B. This series is completely compatible with the Han® B industrial standard. Standard inserts and modules in conjunction with the hinged frames from the Han-Modular® portfolio may be used.

Highlights Han-Eco® B

- Backwards compatibility with the Han® B metal hoods and housings
- Rear mounting for the inserts enables faster installation
- Minimal weight with excellent mechanical robustness
- Outdoor variant is available for more extreme environmental conditions
- "Click and mate" installation ensures secure assembly

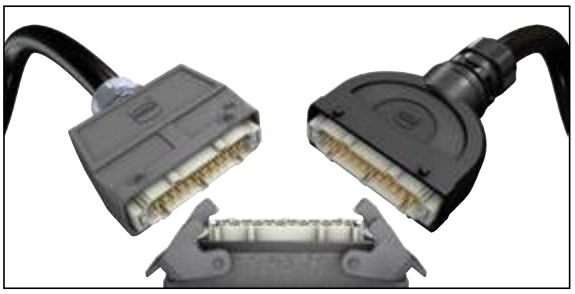



Modules and monoblocks for Han-Eco® Modular

		Han® 100 A Axial module	Han® 100 A Crimp module	Han® 100 A Single module	Han® 70 A Crimp module
70 - 100 A					
	Number of contacts Electrical data Termination type	2* 100 A / 1000 V Axial screw termination	2* 100 A / 1000 V Crimp termination	1 100 A / 830 V Crimp termination	2 70 A / 1000 V Crimp termination
	Cross-section	16 … 35 mm²	10 … 35 mm²	10 … 35 mm²	6 … 25 mm²
	Male module (M)	09 14 002 2651	09 14 002 3051	09 14 001 3031	09 14 002 3041
	Female module (F)	09 14 002 2751	09 14 002 3151	09 14 001 3131	09 14 002 3141
	Cross-section	10 … 25 mm²	-	-	-
	Male module (M)	09 14 002 2653	-	-	-
	Female module (F)	09 14 002 2753	-	-	-

		Han® 70 A Axial module	Han® 70 A Hybrid module	Han® 40 A Axial module	Han® C Axial module
40 - 70 A					
	Number of contacts Electrical data Termination type	2 70 A / 1000 V Axial screw termination	1 + (4 x Han E®) 70 A / 1000 V Axial screw termination	2 40 A / 1000 V Axial screw termination	3 40 A / 690 V Axial screw termination
	Cross-section	14 … 22 mm²	14 … 22 mm²	6 … 10 mm²	6 … 10 mm²
	Male module (M)	09 14 002 2647	09 14 005 2647	09 14 002 2602	09 14 003 2602
	Female module (F)	09 14 002 2742	09 14 005 2742	09 14 002 2702	09 14 003 2702
	Cross-section	6 … 16 mm²	6 … 16 mm²	2.5 … 8 mm²	2.5 … 8 mm²
	Male module (M)	09 14 002 2646	09 14 005 2646	09 14 002 2601	09 14 003 2601
	Female module (F)	09 14 002 2741	09 14 005 2741	09 14 002 2701	09 14 003 2701

		Han E® Quick Lock module	Han® EE Quick Lock module	Han® ES module	Han E® screw module
16 A					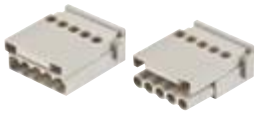
	Number of contacts Electrical data Termination type Cross-section	6 16 A / 500 V Quick Lock termination 0.5 … 2.5 mm²	8 16 A / 400 V Quick Lock termination 0.5 … 2.5 mm²	5 16 A / 400 V Cage clamp termination 0.14 … 2.5 mm²	5 16 A / 230 / 400 V Screw termination 0.5 … 2.5 mm²
	Male module (M)	09 14 006 2633	09 14 008 2633	09 14 005 2616	09 14 005 2601
	Female module (F)	09 14 006 2733	09 14 008 2733	09 14 005 2716	09 14 005 2701

		Han DD® Quick Lock module	Han DD® Quick Lock module
≤ 10 A		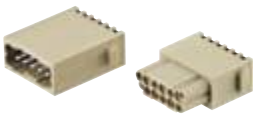	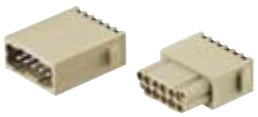
	Number of contacts Electrical data Termination type Cross-section	12, silver plated 10 A / 250 V Quick Lock termination 0.25 … 1.5 mm²	12, gold plated 10 A / 250 V Quick Lock termination 0.25 … 1.5 mm²
	Male module (M)	09 14 012 2632	09 14 012 2634
	Female module (F)	09 14 012 2732	09 14 012 2734

* Double module, requires two places in the frame

For more technical details see chapter 06
Removal tools 09 99 000 0331, 09 99 000 0828 and 09 99 000 0842 see chapter 90
* Take care of the wiring space! Choose inner positions.

Modules and monoblocks for Han-Eco® Modular

		Han® A Crimp module	Han® C module	Han® CC module	Han® CD module
40 A					
	Number of contacts	2	3	4	3 + 4
	Electrical data	40 A / 1000 V	40 A / 690 V	40 A / 830 V	40 A + 10 A / 830 V
	Cross-section	1.5 … 10 mm²	1.5 … 6 mm²	1.5 … 6 mm²	0.14 … 6 mm²
	Termination type	Crimp termination, Han® C	Crimp termination, Han® C	Crimp termination, Han® C	Crimp, Han® C + Han D®
	Male module (M)	09 14 002 3002	09 14 003 3001	09 14 004 3041	09 14 007 3001
	Female module (F)	09 14 002 3102	09 14 003 3101	09 14 004 3141	09 14 007 3101

		Han E® module	Han® EE module	Han® EEE module	Han E® Protected module
16 A					
	Number of contacts	6	8	20*	6
	Electrical data	16 A / 500 V	16 A / 400 V	16 A / 500 V	16 A / 830 V
	Cross-section	0.14 … 4 mm²	0.14 … 4 mm²	0.14 … 4 mm²	0.14 … 4 mm²
	Termination type	Crimp termination, Han E®	Crimp termination, Han E®	Crimp termination, Han E®	Crimp termination, Han E®
	Male module (M)	09 14 006 3001	09 14 008 3001	09 14 020 3001	09 14 006 3041
	Female module (F)	09 14 006 3101	09 14 008 3101	09 14 020 3101	09 14 006 3141

		Han DD® module	Han® DDD module	Han DD® Quad module
≤ 10 A				
	Number of contacts	12	17	25
	Electrical data	10 A / 250 V	10 A / 150 V	4 A / 50 V
	Cross-section	0.14 … 2.5 mm²	0.14 … 2.5 mm²	0.08 … 0.52 mm²
	Termination type	Crimp termination, Han D®	Crimp termination, Han D®	Crimp termination, D-Sub
	Male module (M)	09 14 012 3002	09 14 017 3001	09 14 025 3001
	Female module (F)	09 14 012 3102	09 14 017 3101	09 14 025 3101

		Han® HV module 40 A	Han® HV module 16 A	Han® HV Single module
High voltage				
	Number of contacts	2*	2*	2
	Electrical data	40 A / 2900/5000 V	16 A / 2900/5000 V	16 A / 2500 V
	Cross-section	1.5 … 10 mm²	0.14 … 4 mm²	0.14 … 4 mm²
	Termination type	Crimp termination, Han® C	Crimp termination, Han E®	Crimp termination, Han E®
	Male module (M)	09 14 002 3023	09 14 002 3021	09 14 002 3025
	Female module (F)	09 14 002 3123	09 14 002 3121	09 14 002 3125

* Double module, requires two places in the frame

For more technical details see chapter 06
Removal tools 09 99 000 0331, 09 99 000 0828 and 09 99 000 0842 see chapter 90
* Take care of the wiring space! Choose inner positions.

Modules and monoblocks for Han-Eco® Modular

Han® RJ45 modules

Han® RJ45 module	for patch cable	for IDC	for patch cable	for IDC and preLink
- 8 contacts - Cat. 6_A - 10 Gbit/s				
Part numbers	Male module (M) 09 14 001 4623	Male module (M) 09 14 001 4623	Female module (F) 09 14 001 4721	Female module (F) 09 14 001 4722
	Adapter for patch cables: 09 14 000 9966	RJ Industrial IDC: 09 45 400 1560	-	RJ45 female IDC: 09 14 545 1561
	Patch cable cat. 6: 09 47 474 71xx	-	-	RJ45 female preLink: 09 14 008 4720

Han-Quintax® modules

	Han-Quintax®	Han® High Density Quintax	Han D® Coax	Han E® Coax
Quintax module				
Number of contacts	2 x 4*	2 x 8*	2 x Coax*	2 x Coax*
Male module (M)	09 14 002 3001	09 14 002 3001	09 14 002 3001	09 14 002 3001
Female module (F)	09 14 002 3101	09 14 002 3101	09 14 002 3101	09 14 002 3101
Insert (Cable Ø ≤ 9.5 mm)				
Data rate	100 Mbit/s (Cat. 5e)	100 Mbit/s (Cat. 5e)	≤ 500 Mhz / 75 Ω	≤ 500 Mhz / 50 Ω
Electrical data	10 A / 50 V	5 A / 50 V	10 A / 50 V	16 A / 50 V
Cross-section	0.14 … 2.5 mm²	0.09 … 0.52 mm²	0.14 … 2.5 mm²	0.14 … 4 mm²
Termination type	Crimp termination, Han D®	Crimp termination, D-Sub	Crimp termination, Han D®	Crimp termination, Han E®
Male insert (M)	09 15 004 3013	09 15 008 3013	09 15 001 3013	09 15 001 3023
Female insert (F)	09 15 004 3113	09 15 008 3113	09 15 001 3113	09 15 001 3123
PE shielding termination	*Optional shielding termination to the hinged frame with the aid of Han-Quintax® metal adapter 09 14 000 9915*			

Han® GigaBit – Han® MegaBit modules

	Han® GigaBit module	Han® MegaBit module	Han® MegaBit module	Han® Shielded module
Adapter Modul			with 1 cable entry 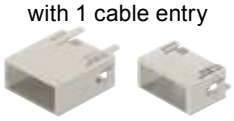	
Male module (M)	09 14 001 3011	09 14 001 3011	09 14 001 3011	09 14 001 3011
Female module (F)	09 14 001 3111	09 14 001 3111	09 14 001 3111	09 14 001 3111
Insert (Cable Ø ≤ 14 mm)				
Number of contacts	8	2 x 4	8	20
Data rate	10 Gbit/s (Cat. 6_A)	2 x 100 Mbit/s (Cat. 5e)	1 Gbit/s (Cat. 5e)	
Electrical data	5 A / 50 V	10 A / 50 V	10 A / 50 V	4 A / 32 V
Cross-section	0.09 … 0.52 mm²	0.14 … 2.5 mm²	0.14 … 2.5 mm²	0.09 … 0.52 mm²
Termination type	Crimp termination, D-Sub	Crimp termination, Han D®	Crimp termination, Han D®	Crimp termination, D-Sub
Shielding termination	Crimp flange	2 x crimp flange	Crimp flange	Crimp flange
Male insert (M)	09 14 008 3011	09 14 008 3016	09 14 008 3021	09 14 020 3013
Female insert (F)	09 14 008 3111	09 14 008 3116	09 14 008 3121	09 14 020 3113
	with PE shielding termination	with PE shielding termination	with PE shielding termination	-
Male insert (M)	09 14 008 3012	09 14 008 3017	09 14 008 3022	
Female insert (F)	09 14 008 3112	09 14 008 3117	09 14 008 3122	

Serial Bus modules

	Han D-Sub module	Han® USB module	Han® FireWire module
			
Number of contacts	9 + shielding	8	6
Datenrate	12 Mbit/s (Profibus)	5 Gbit/s (USB 3.0)	400 Mbit/s (IEEE 1394a)
Electrical data	5 A / 50 V	1 A / 50 V	1 A / 50 V
Cross-section	0.09 … 0.52 mm²		
Termination type	Crimp termination, D-Sub	USB patch cable	FireWire patch cable
Male module (M)	09 14 009 3001	09 14 001 4601	09 14 001 4611
Female module (F)	09 14 009 3101	09 14 001 4703	09 14 001 4711

* Double module, requires two places in the frame

For more technical details see chapter 06
Removal tools 09 99 000 0331, 09 99 000 0828 and 09 99 000 0842 see chapter 90
* Take care of the wiring space! Choose inner positions.

Modules and monoblocks for Han-Eco® Modular

Optical modules

	Han® SC module	Han® Multi module	Han® Multi module
Number of contacts	 4	 4	 12*
Male module (M)	09 14 004 4701	09 14 004 4501	09 14 012 4501
Female module (F)	09 14 004 4713	09 14 004 4512	09 14 012 4512
Contacts			
1 mm POF	20 10 001 5211	Male: 20 10 001 4211 Female: 20 10 001 4221	Male: 20 10 001 4211 Female: 20 10 001 4221
1 mm POF Fast assembly termination	20 10 001 5217		
SI-Fibre 200 / 230 µm Multi-Mode	20 10 230 5211	Male: 20 10 230 4211 Female: 20 10 230 4221	Male: 20 10 230 4211 Female: 20 10 230 4221
GI-Fibre 50-62.5 / 125 µm Multi-Mode	20 10 125 5211	Male: 20 10 125 4212 Female: 20 10 125 4222	Male: 20 10 125 4212 Female: 20 10 125 4222

Special modules

	Han-Eco® PE module	Han® Dummy module
Field of application	for Han-Eco ® hoods/housings only	to fill-up empty module places
Number of contacts Electrical data Cross-section Termination type	 1 x PE 1.5 … 16 mm² Screw termination	
Male module (M)	19 41 001 2600	09 14 000 9950
Female module (F)	19 41 001 2700	

* Double module, requires two places in the frame

Monoblocks

	6 B	10 B	16 B	24 B
Number of contacts Electrical data Cross section Termination type	 10 16 A / 500 V 0.75 … 2.5 mm² Screw termination	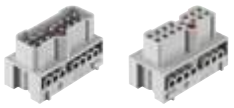 14 16 A / 500 V 0.75 … 2.5 mm² Screw termination	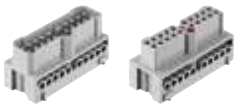 20 16 A / 500 V 0.75 … 2.5 mm² Screw termination	 28 16 A / 500 V 0.75 … 2.5 mm² Screw termination
Male	19 41 010 2601	19 41 014 2601	19 41 020 2601	19 41 028 2601
Female	19 41 010 2701	19 41 014 2701	19 41 020 2701	19 41 028 2701

For more technical details see chapter 06
Removal tools 09 99 000 0331, 09 99 000 0828 and 09 99 000 0842 see chapter 90
* Take care of the wiring space! Choose inner positions.

Features

- With integrated cable gland
- Optional PE contact module to hold the protective ground conductor
- Suitable for applications according to protection class II

Technical characteristics

Limiting temperature	-40 ... +125 °C
Degree of protection acc. to IEC 60529	IP65
Material (hood/housing)	Polyamide, Fibre-glass reinforced
Colour (hood/housing)	RAL 9005 (jet black)
Material (seal)	NBR
Colour (seal)	RAL 9005 (jet black)
Material (locking)	Polyamide, Fibre-glass reinforced
Colour (locking)	RAL 9005 (jet black)
Material flammability class acc. to UL 94	V-0
Material flammability class acc. to UL 94 (locking levers)	V-0
RoHS	compliant

Specifications and approvals

IEC 61984
EN 45545-2
R22: HL1, HL2, HL3
R23: HL1, HL2, HL3
R24: HL1, HL2, HL3
UL 1977 ECBT2.E235076
CSA-C22.2 No. 182.3 ECBT8.E235076

Details

Assembly dimensions are identical for the Han® B bulkhead mounted housings - not mating compatible with the hoods and housings of the series Han® B.

Double locking lever

Identification	Cable entry	Clamping range (mm)	Part number	Drawing (dimensions in mm)
Han-Eco® Modular, Hoods, With integrated cable gland, Top entry 	1x M32	13 ... 21	19 41 106 0422	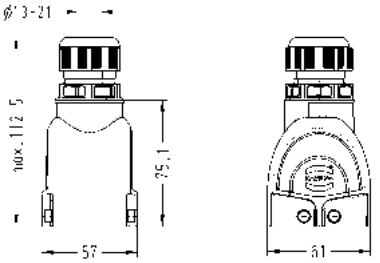
Han-Eco® Modular, Hoods, With integrated cable gland, Side entry 	1x M32	13 ... 21	19 41 106 0522	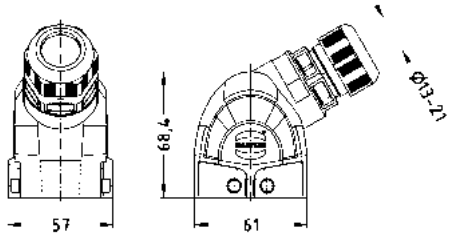
Han-Eco® Modular, Bulkhead mounted housings 			19 41 006 0301	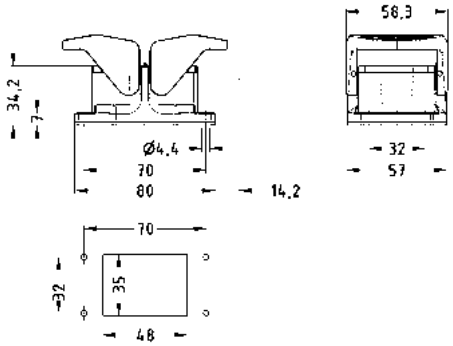 Panel cut out

Identification	Cable entry	Clamping range (mm)	Part number	Drawing (dimensions in mm)
Han-Eco® Modular, Surface mounted housing, With integrated cable gland, Side entry 	1x M32 2x M32	13 ... 21 13 ... 21	19 41 106 0232 19 41 106 0272	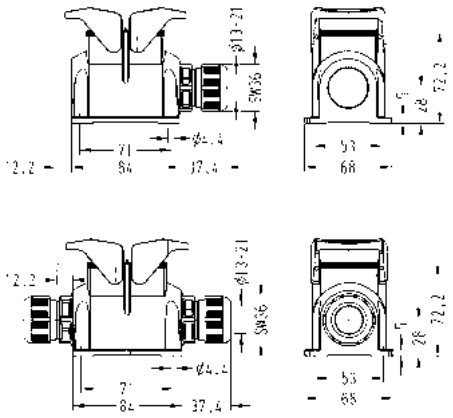
Han-Eco® Modular, Cable to cable housing, With integrated cable gland, Top entry 	1x M32	13 ... 21	19 41 106 0722	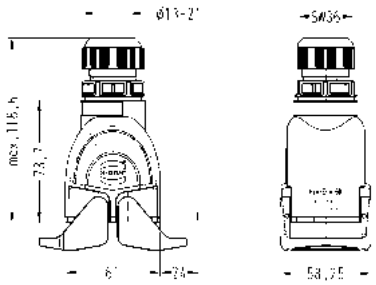
Han-Eco® Modular, Protection cover, for hoods 			19 41 006 5406	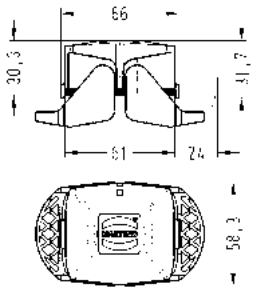
Han-Eco® Modular, Protection cover, for hoods, With fixing cord 			19 41 006 5407	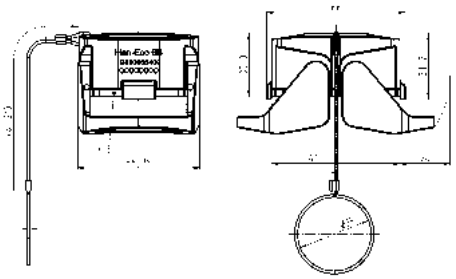

Identification	Cable entry	Clamping range (mm)	Part number	Drawing (dimensions in mm)
Han-Eco® Modular, Protection cover, for bulkhead mounted housings, for surface mounted housings, for cable to cable housing, With fixing cord 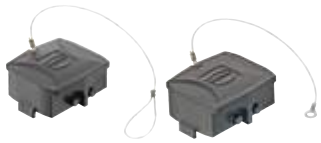			19 41 006 5402 19 41 006 5404	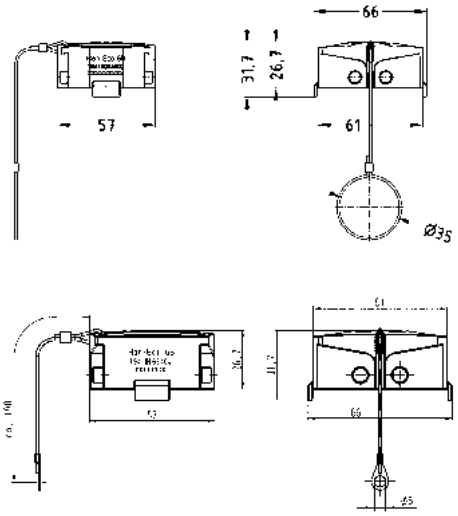
Han-Eco® Modular, Protection cover, for bulkhead mounted housings, for surface mounted housings, for cable to cable housing 			19 41 006 5405	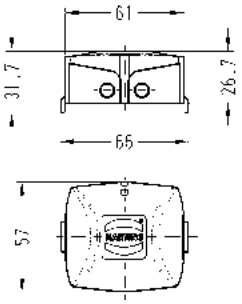

Double locking lever

Identification	Cable entry	Clamping range (mm)	Part number	Drawing (dimensions in mm)
Han-Eco® Modular, Hoods, With integrated cable gland, Top entry 	1x M32	13 ... 21	19 41 110 0422	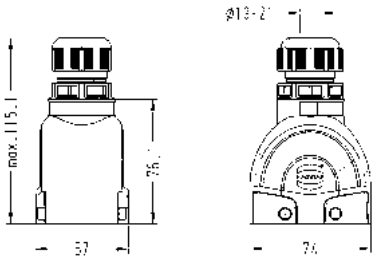
Han-Eco® Modular, Hoods, With integrated cable gland, Side entry 	1x M32	13 ... 21	19 41 110 0522	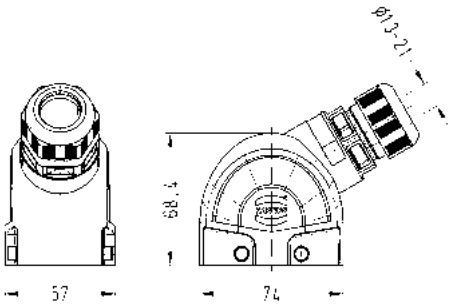
Han-Eco® Modular, Bulkhead mounted housings 			19 41 010 0301	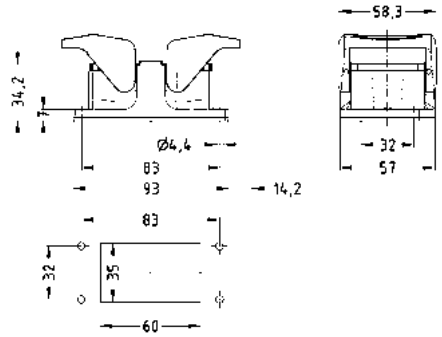 Panel cut out

Identification	Cable entry	Clamping range (mm)	Part number	Drawing (dimensions in mm)
Han-Eco® Modular, Surface mounted housing, With integrated cable gland, Side entry 	1x M32 2x M32	13 ... 21 13 ... 21	19 41 110 0232 19 41 110 0272	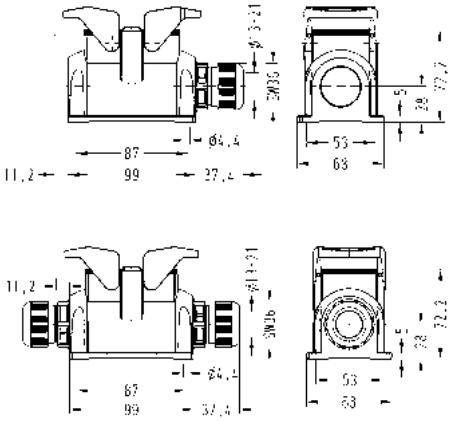
Han-Eco® Modular, Cable to cable housing, With integrated cable gland, Top entry 	1x M32	13 ... 21	19 41 110 0722	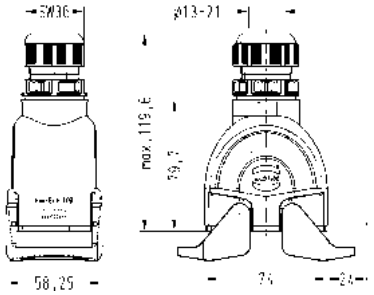
Han-Eco® Modular, Protection cover, for hoods 			19 41 010 5406	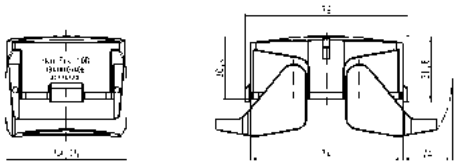
Han-Eco® Modular, Protection cover, for hoods, With fixing cord 			19 41 010 5407	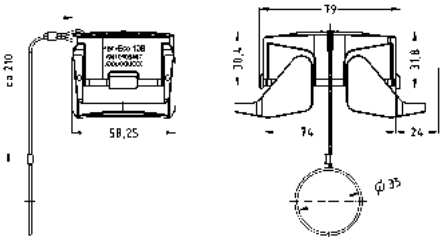

Identification	Cable entry	Clamping range (mm)	Part number	Drawing (dimensions in mm)
Han-Eco® Modular, Protection cover, for bulkhead mounted housings, for surface mounted housings, for cable to cable housing, With fixing cord 			19 41 010 5402 19 41 010 5404	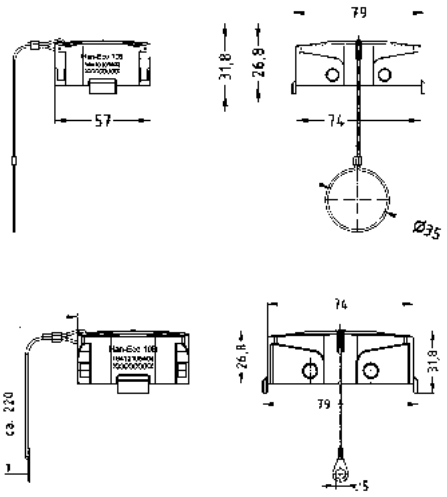
Han-Eco® Modular, Protection cover, for bulkhead mounted housings, for surface mounted housings, for cable to cable housing 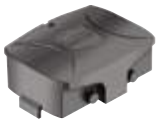			19 41 010 5405	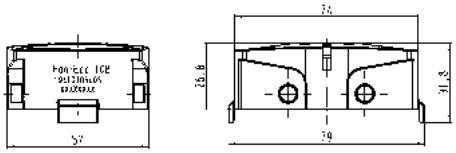

Double locking lever

Identification	Cable entry	Clamping range (mm)	Part number	Drawing (dimensions in mm)
Han-Eco® Modular, Hoods, With integrated cable gland, Top entry 	1x M40	16 ... 28	19 41 116 0423	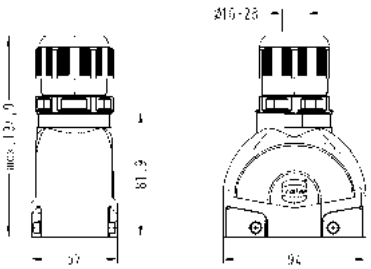
Han-Eco® Modular, Hoods, With integrated cable gland, Side entry 	1x M40	16 ... 28	19 41 116 0523	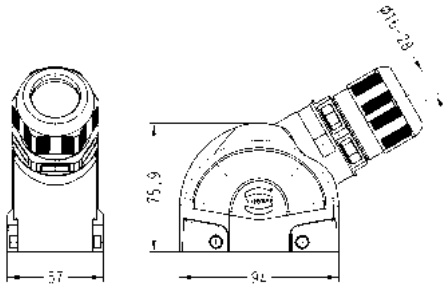
Han-Eco® Modular, Bulkhead mounted housings 			19 41 016 0301	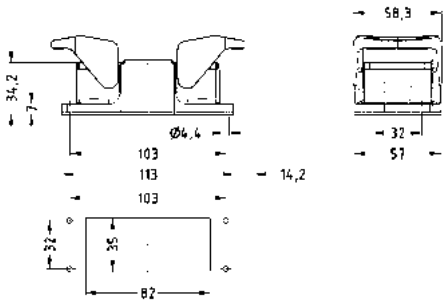 Panel cut out

Identification	Cable entry	Clamping range (mm)	Part number	Drawing (dimensions in mm)
Han-Eco® Modular, Surface mounted housing, With integrated cable gland, Side entry 	1x M40 2x M40	16 ... 28 16 ... 28	19 41 116 0233 19 41 116 0273	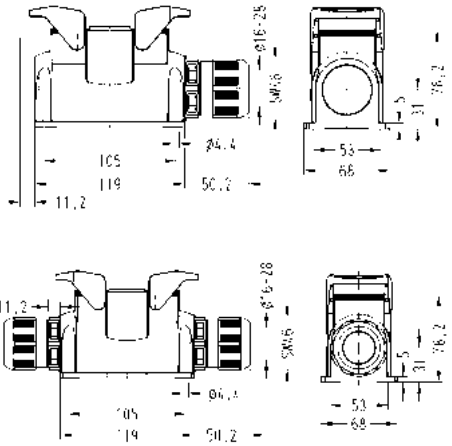
Han-Eco® Modular, Cable to cable housing, With integrated cable gland, Top entry 	1x M40	16 ... 28	19 41 116 0723	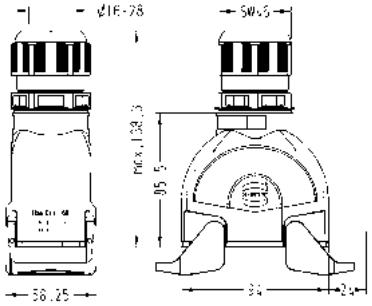
Han-Eco® Modular, Protection cover, for hoods 			19 41 016 5406	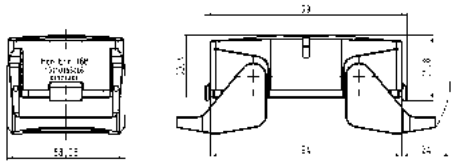
Han-Eco® Modular, Protection cover, for hoods, With fixing cord 			19 41 016 5407	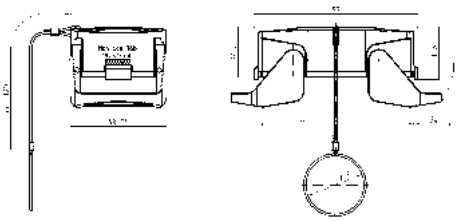

Identification	Cable entry	Clamping range (mm)	Part number	Drawing (dimensions in mm)
Han-Eco® Modular, Protection cover, for bulkhead mounted housings, for surface mounted housings, for cable to cable housing, With fixing cord 			19 41 016 5402 19 41 016 5404	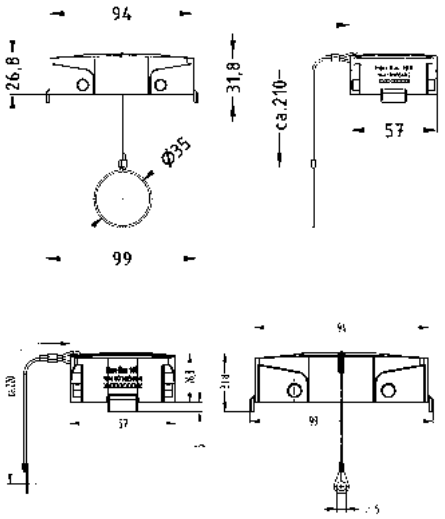
Han-Eco® Modular, Protection cover, for bulkhead mounted housings, for surface mounted housings, for cable to cable housing 			19 41 016 5405	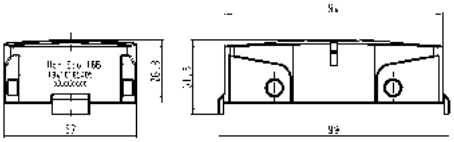

Double locking lever

Identification	Cable entry	Clamping range (mm)	Part number	Drawing (dimensions in mm)
Han-Eco® Modular, Hoods, With integrated cable gland, Top entry 	1x M40	16 ... 28	19 41 124 0423	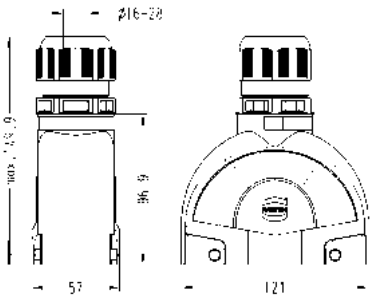
Han-Eco® Modular, Hoods, With integrated cable gland, Side entry 	1x M40	16 ... 28	19 41 124 0523	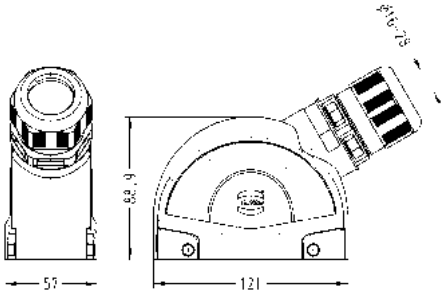
Han-Eco® Modular, Bulkhead mounted housings 			19 41 024 0301	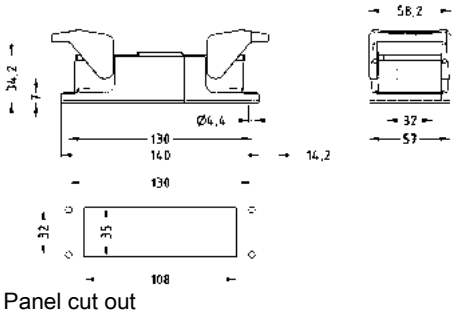 Panel cut out

Identification	Cable entry	Clamping range (mm)	Part number	Drawing (dimensions in mm)
Han-Eco® Modular, Surface mounted housing, With integrated cable gland, Side entry 	1x M40 2x M40	16 ... 28 16 ... 28	19 41 124 0233 19 41 124 0273	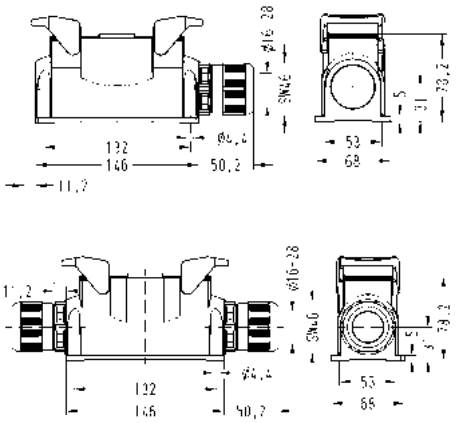
Han-Eco® Modular, Cable to cable housing, With integrated cable gland, Top entry 	1x M40	16 ... 28	19 41 124 0723	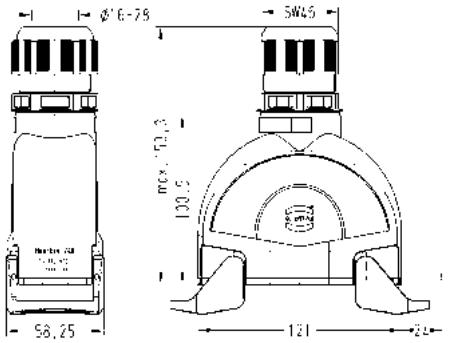
Han-Eco® Modular, Protection cover, for hoods 			19 41 024 5406	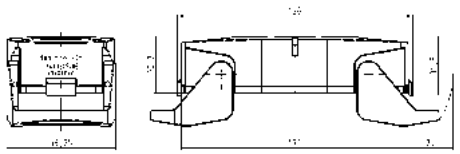
Han-Eco® Modular, Protection cover, for hoods, With fixing cord 			19 41 024 5407	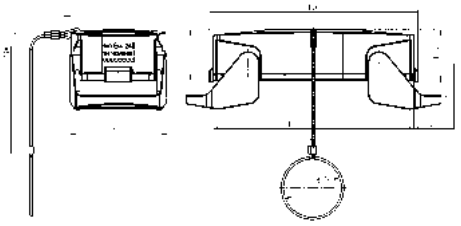

Identification	Cable entry	Clamping range (mm)	Part number	Drawing (dimensions in mm)
Han-Eco® Modular, Protection cover, for bulkhead mounted housings, for surface mounted housings, for cable to cable housing, With fixing cord 			19 41 024 5402 19 41 024 5404	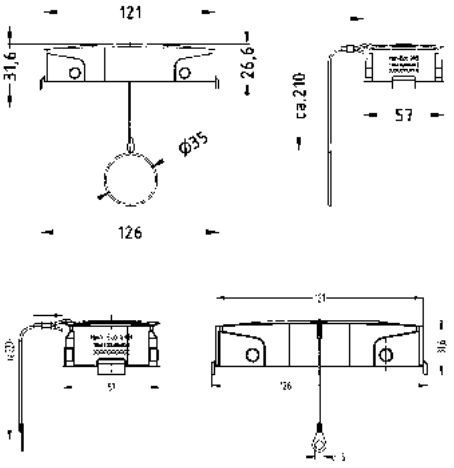
Han-Eco® Modular, Protection cover, for bulkhead mounted housings, for surface mounted housings, for cable to cable housing 			19 41 024 5405	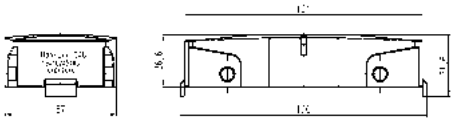

Features

- With integrated cable gland
- Optional PE contact module to hold the protective ground conductor
- Suitable for applications according to protection class II

Technical characteristics

Limiting temperature	-40 ... +125 °C
Degree of protection acc. to IEC 60529	IP65
Material (hood/housing)	Polyamide, Fibre-glass reinforced
Colour (hood/housing)	RAL 9005 (jet black)
Material (seal)	FPM
Colour (seal)	RAL 7001 (silver-grey)
Material (locking)	Polyamide, Fibre-glass reinforced
Colour (locking)	RAL 9005 (jet black)
Material flammability class acc. to UL 94	V-0
Material flammability class acc. to UL 94 (locking levers)	V-0
RoHS	compliant

Specifications and approvals

IEC 61984
EN 45545-2
R22: HL1, HL2, HL3
R23: HL1, HL2, HL3
R24: HL1, HL2, HL3
UL 1977 ECBT2.E235076
CSA-C22.2 No. 182.3 ECBT8.E235076

Details

Assembly dimensions are identical for the Han® B bulkhead mounted housings - not mating compatible with the hoods and housings of the series Han® B.

Double locking lever

Identification	Cable entry	Clamping range (mm)	Part number	Drawing (dimensions in mm)
Han-Eco® Modular, Hoods, With integrated cable gland, Top entry 	1x M32	13 ... 21	19 41 106 0422	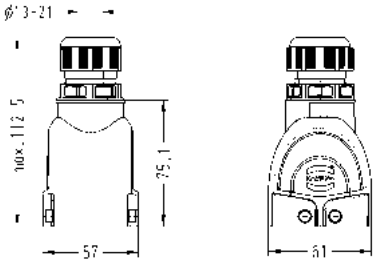
Han-Eco® Modular, Hoods, With integrated cable gland, Side entry 	1x M32	13 ... 21	19 41 106 0522	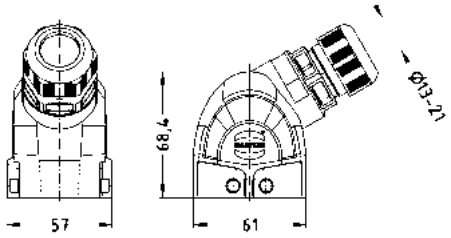
Han-Eco® Modular, Bulkhead mounted housings 			19 41 206 0301	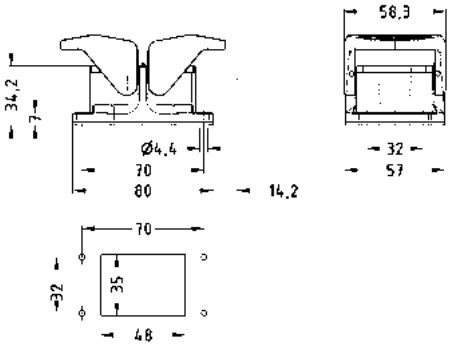 Panel cut out

Han-Eco® Modular for outdoor applications — Size 6 B

Identification	Cable entry	Clamping range (mm)	Part number	Drawing (dimensions in mm)
Han-Eco® Modular, Surface mounted housing, With integrated cable gland, Side entry 	1x M32 2x M32	13 ... 21 13 ... 21	19 41 306 0232 19 41 306 0272	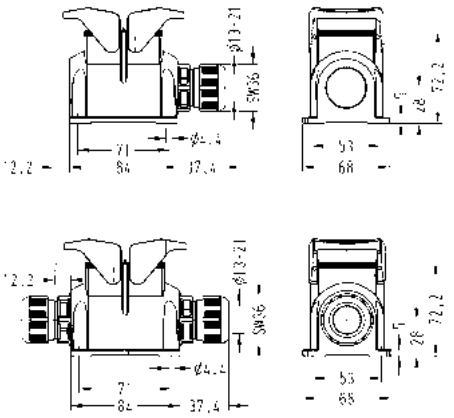
Han-Eco® Modular, Cable to cable housing, With integrated cable gland, Top entry 	1x M32	13 ... 21	19 41 306 0722	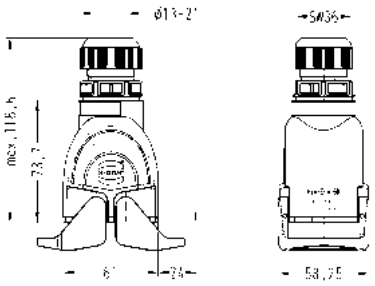
Han-Eco® Modular, Protection cover, for hoods 			19 41 206 5406	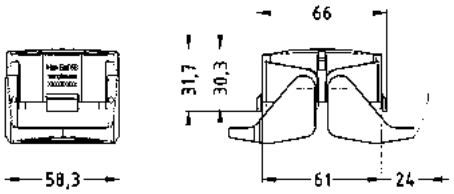
Han-Eco® Modular, Protection cover, for hoods, With fixing cord 			19 41 206 5407	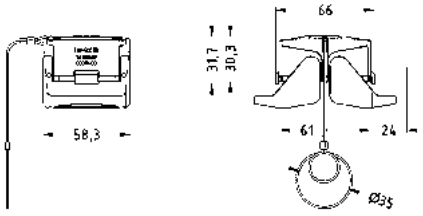

Identification	Cable entry	Clamping range (mm)	Part number	Drawing (dimensions in mm)
Han-Eco® Modular, Protection cover, for bulkhead mounted housings, for surface mounted housings, for cable to cable housing, With fixing cord 			19 41 006 5402 19 41 006 5404	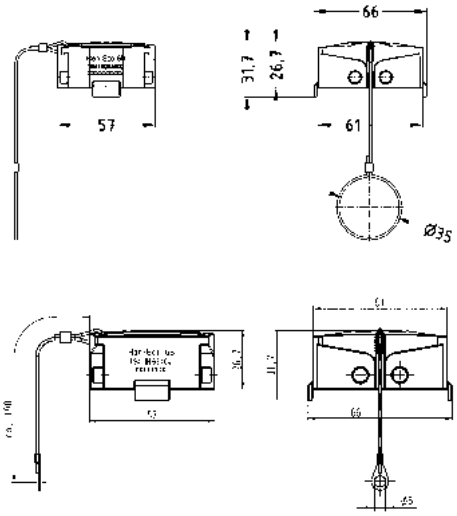
Han-Eco® Modular, Protection cover, for bulkhead mounted housings, for surface mounted housings, for cable to cable housing 			19 41 006 5405	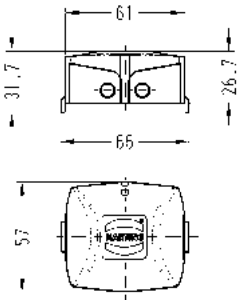

Double locking lever

Identification	Cable entry	Clamping range (mm)	Part number	Drawing (dimensions in mm)
Han-Eco® Modular, Hoods, With integrated cable gland, Top entry 	1x M32	13 ... 21	19 41 110 0422	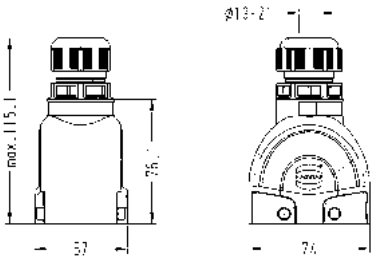
Han-Eco® Modular, Hoods, With integrated cable gland, Side entry 	1x M32	13 ... 21	19 41 110 0522	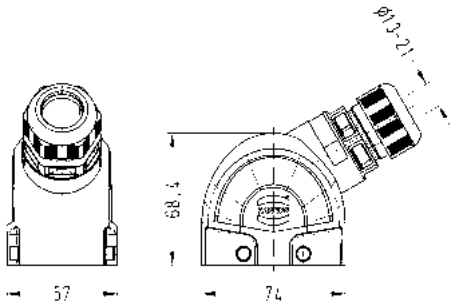
Han-Eco® Modular, Bulkhead mounted housings 			19 41 210 0301	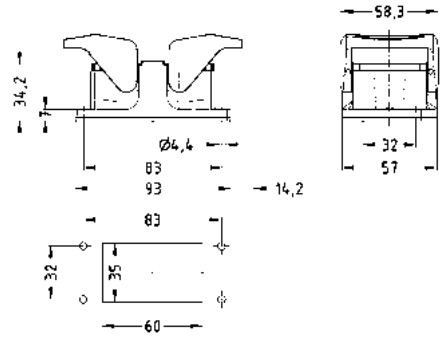 Panel cut out

Identification	Cable entry	Clamping range (mm)	Part number	Drawing (dimensions in mm)
Han-Eco® Modular, Surface mounted housing, With integrated cable gland, Side entry 	1x M32 2x M32	13 ... 21 13 ... 21	19 41 310 0232 19 41 310 0272	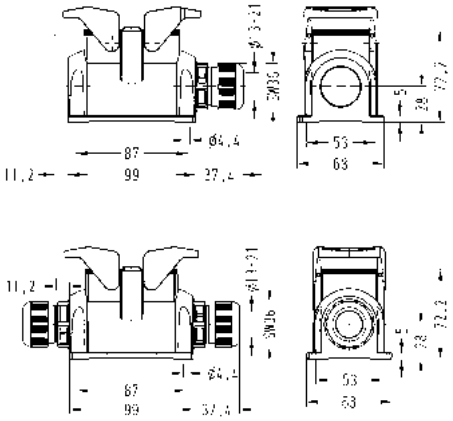
Han-Eco® Modular, Cable to cable housing, With integrated cable gland, Top entry 	1x M32	13 ... 21	19 41 310 0722	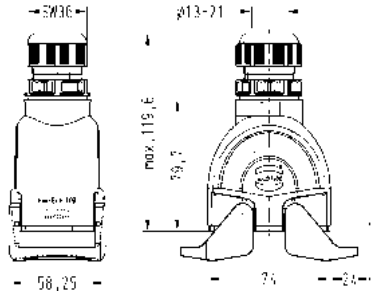
Han-Eco® Modular, Protection cover, for hoods 			19 41 210 5406	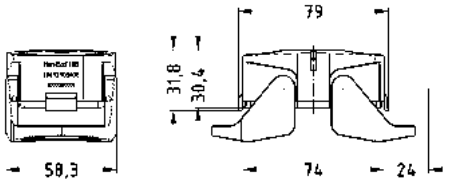
Han-Eco® Modular, Protection cover, for hoods, With fixing cord 			19 41 210 5407	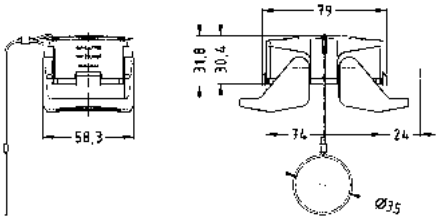

Han-Eco® Modular for outdoor applications

Size 10 B

Identification	Cable entry	Clamping range (mm)	Part number	Drawing (dimensions in mm)
Han-Eco® Modular, Protection cover, for bulkhead mounted housings, for surface mounted housings, for cable to cable housing, With fixing cord 			19 41 010 5402 19 41 010 5404	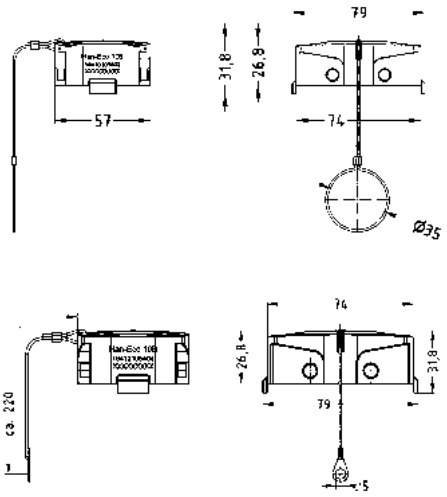
Han-Eco® Modular, Protection cover, for bulkhead mounted housings, for surface mounted housings, for cable to cable housing 			19 41 010 5405	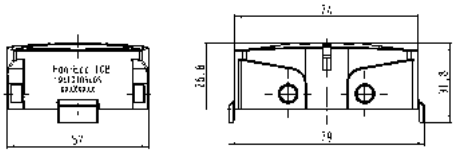

Double locking lever

Identification	Cable entry	Clamping range (mm)	Part number	Drawing (dimensions in mm)
Han-Eco® Modular, Hoods, With integrated cable gland, Top entry 	1x M40	16 ... 28	19 41 116 0423	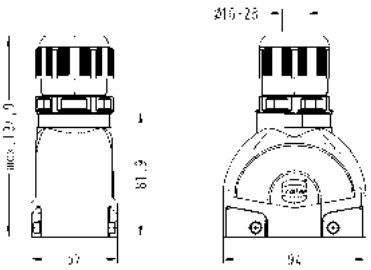
Han-Eco® Modular, Hoods, With integrated cable gland, Side entry 	1x M40	16 ... 28	19 41 116 0523	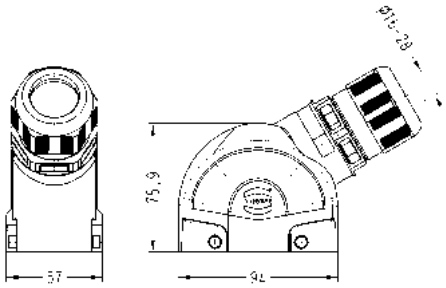
Han-Eco® Modular, Bulkhead mounted housings 			19 41 216 0301	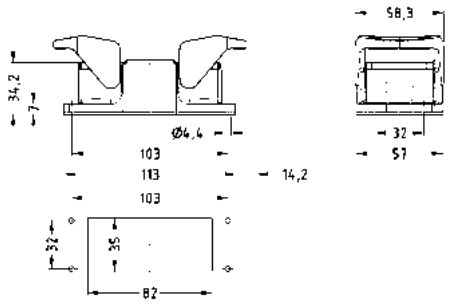 Panel cut out

Han-Eco® Modular for outdoor applications Size 16 B

Identification	Cable entry	Clamping range (mm)	Part number	Drawing (dimensions in mm)
Han-Eco® Modular, Surface mounted housing, With integrated cable gland, Side entry 	1x M40 2x M40	16 ... 28 16 ... 28	19 41 316 0233 19 41 316 0273	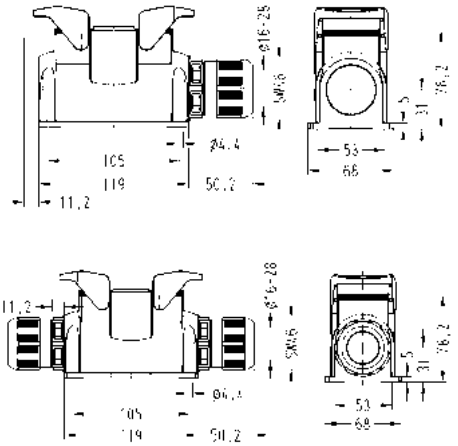
Han-Eco® Modular, Cable to cable housing, With integrated cable gland, Top entry 	1x M40	16 ... 28	19 41 316 0723	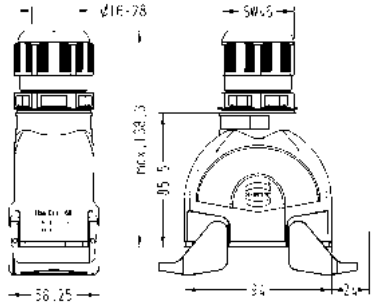
Han-Eco® Modular, Protection cover, for hoods 			19 41 216 5406	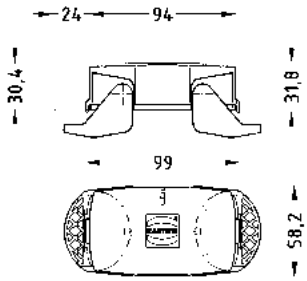
Han-Eco® Modular, Protection cover, for hoods, With fixing cord 			19 41 216 5407	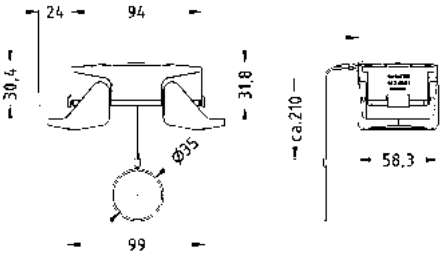

Identification	Cable entry	Clamping range (mm)	Part number	Drawing (dimensions in mm)
Han-Eco® Modular, Protection cover, for bulkhead mounted housings, for surface mounted housings, for cable to cable housing, With fixing cord 			19 41 016 5402 19 41 016 5404	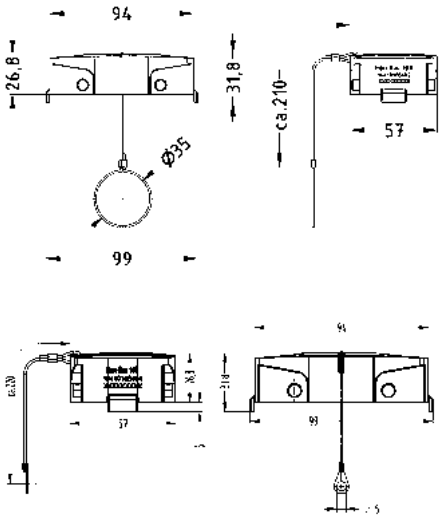
Han-Eco® Modular, Protection cover, for bulkhead mounted housings, for surface mounted housings, for cable to cable housing 			19 41 016 5405	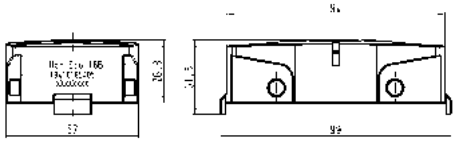

Double locking lever

Identification	Cable entry	Clamping range (mm)	Part number	Drawing (dimensions in mm)
Han-Eco® Modular, Hoods, With integrated cable gland, Top entry 	1x M40	16 ... 28	19 41 124 0423	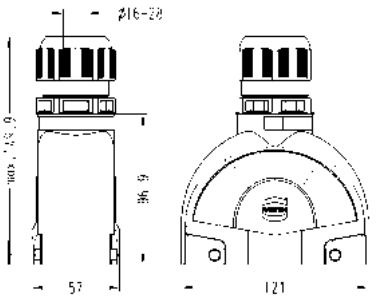
Han-Eco® Modular, Hoods, With integrated cable gland, Side entry 	1x M40	16 ... 28	19 41 124 0523	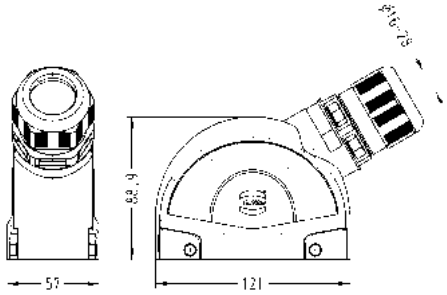
Han-Eco® Modular, Bulkhead mounted housings 			19 41 224 0301	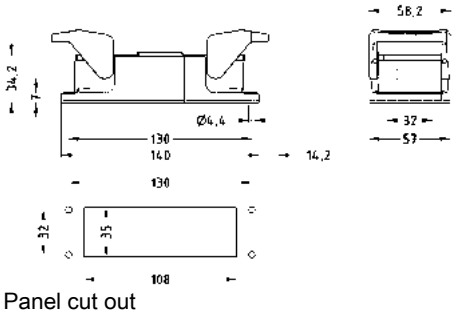 Panel cut out

Identification	Cable entry	Clamping range (mm)	Part number	Drawing (dimensions in mm)
Han-Eco® Modular, Surface mounted housing, With integrated cable gland, Side entry 	1x M40 2x M40	16 ... 28 16 ... 28	19 41 324 0233 19 41 324 0273	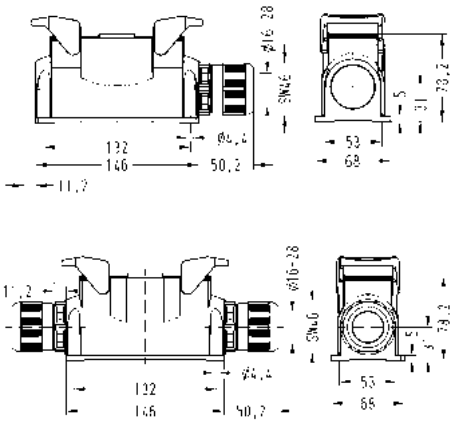
Han-Eco® Modular, Cable to cable housing, With integrated cable gland, Top entry 	1x M40	16 ... 28	19 41 324 0723	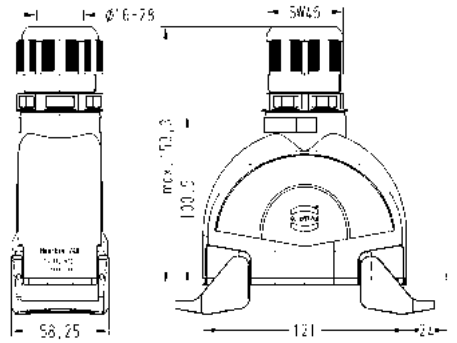
Han-Eco® Modular, Protection cover, for hoods 			19 41 224 5406	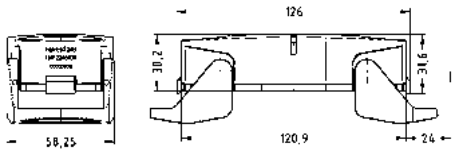
Han-Eco® Modular, Protection cover, for hoods, With fixing cord 			19 41 224 5407	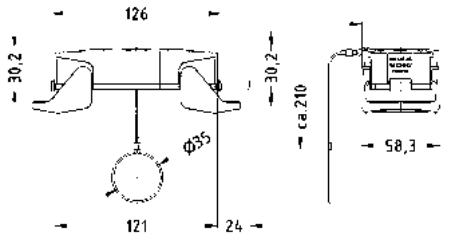

Han-Eco® Modular for outdoor applications

Size 24 B

Identification	Cable entry	Clamping range (mm)	Part number	Drawing (dimensions in mm)
Han-Eco® Modular, Protection cover, for bulkhead mounted housings, for surface mounted housings, for cable to cable housing, With fixing cord 			19 41 024 5402 19 41 024 5404	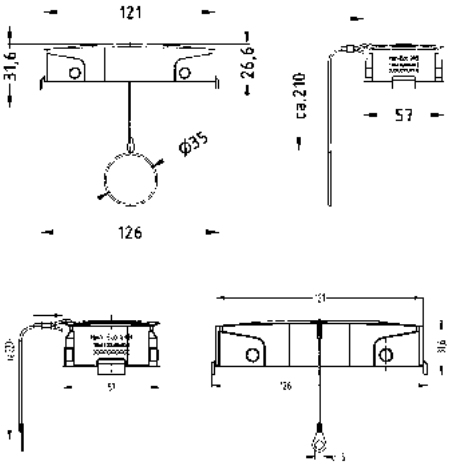
Han-Eco® Modular, Protection cover, for bulkhead mounted housings, for surface mounted housings, for cable to cable housing 			19 41 024 5405	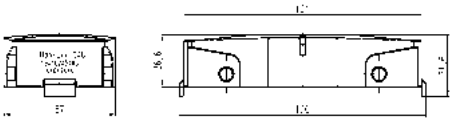

Features

- With integrated cable gland
- Suitable for applications according to protection class II

Technical characteristics

Limiting temperature	-40 ... +125 °C
Degree of protection acc. to IEC 60529	IP65
Material (hood/housing)	Polyamide, Fibre-glass reinforced
Colour (hood/housing)	RAL 9005 (jet black)
Material (seal)	NBR
Colour (seal)	RAL 9005 (jet black)
Material (locking)	Polyamide, Fibre-glass reinforced
Colour (locking)	RAL 9005 (jet black)
Material flammability class acc. to UL 94	V-0
Material flammability class acc. to UL 94 (locking levers)	V-0
RoHS	compliant with exemption
RoHS exemptions	**6c:** Copper alloy containing up to 4 % lead by weight

Specifications and approvals

IEC 61984
EN 45545-2
R22: HL1, HL2, HL3
R23: HL1, HL2, HL3
R24: HL1, HL2, HL3

Details

Assembly dimensions are identical for the Han® A bulkhead and surface mounted housings – mating compatible with all metal hoods and housings of the series Han® A.

As an option a larger panel cut out for the rear assembly of the bulkhead mounted housings is possible.

Single locking lever

Identification	Cable entry	Clamping range (mm)	Part number	Drawing (dimensions in mm)
Han-Eco® A, Hoods, With integrated cable gland, Top entry 	1x M20 1x M25	6 ... 13 9 ... 17	19 46 110 0445 19 46 110 0446	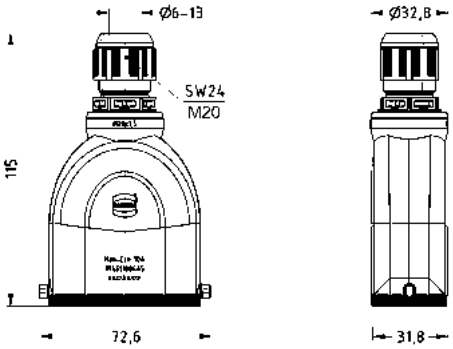
Han-Eco® A, Hoods, With integrated cable gland, Side entry 	1x M20 1x M25	6 ... 13 9 ... 17	19 46 110 0545 19 46 110 0546	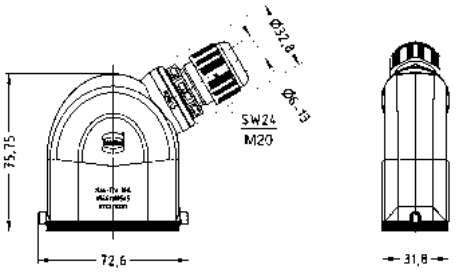
Han-Eco® A, Bulkhead mounted housings 			19 46 010 0301	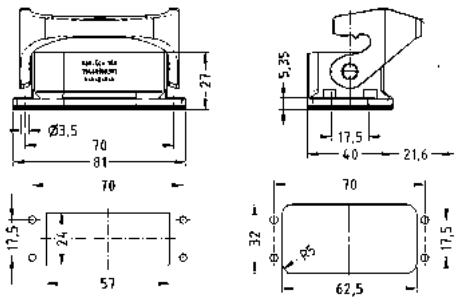 Panel cut out Front mounting / Rear mounting

Identification	Cable entry	Clamping range (mm)	Part number	Drawing (dimensions in mm)
Han-Eco® A, Bulkhead mounted housings, With thermo-plastic cover 			19 46 010 0302	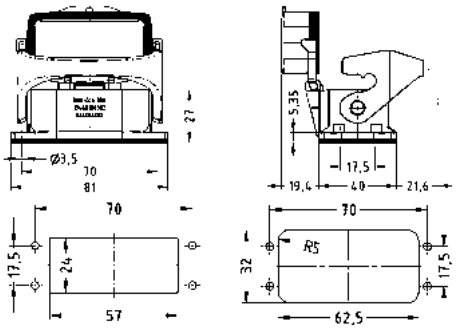 Panel cut out Front mounting / Rear mounting
Han-Eco® A, Surface mounted housing, With integrated cable gland, Side entry 	1x M20 1x M25 2x M20 2x M25	6 ... 13 9 ... 17 6 ... 13 9 ... 17	19 46 110 0250 19 46 110 0251 19 46 110 0290 19 46 110 0291	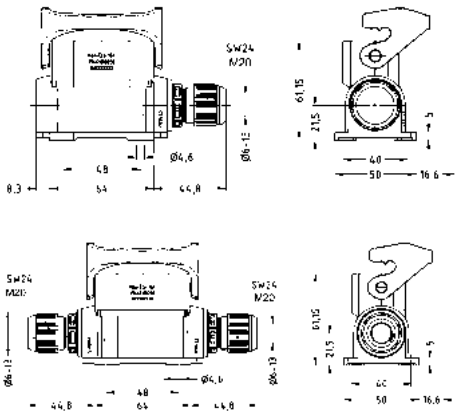
Han-Eco® A, Surface mounted housing, With thermo-plastic cover, With integrated cable gland, Side entry 	1x M20 1x M25 2x M20 2x M25	6 ... 13 9 ... 17 6 ... 13 9 ... 17	19 46 110 0252 19 46 110 0253 19 46 110 0292 19 46 110 0293	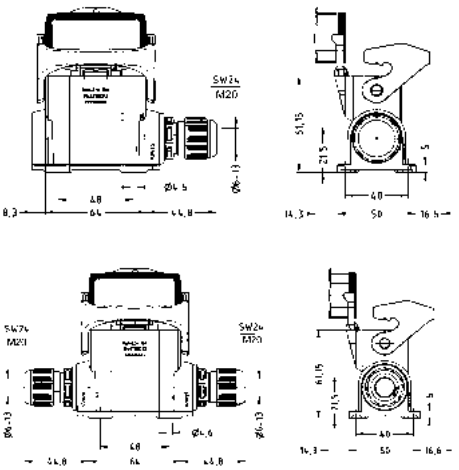

Identification	Cable entry	Clamping range (mm)	Part number	Drawing (dimensions in mm)
Han-Eco® A, Cable to cable housing, With integrated cable gland, Top entry 	1x M20 1x M25	6 ... 13 9 ... 17	19 46 110 0435 19 46 110 0436	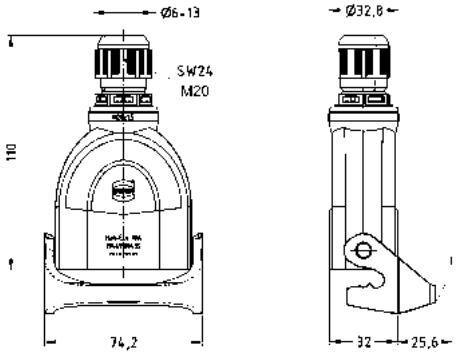
Han-Eco® A, Protection cover, for bulkhead mounted housings, for surface mounted housings 			19 46 010 5425	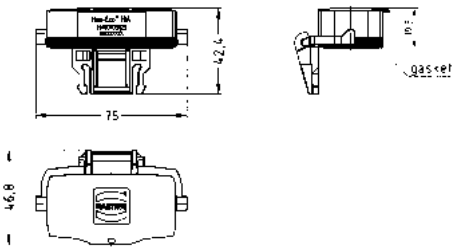

Single locking lever



Identification	Cable entry	Clamping range (mm)	Part number	Drawing (dimensions in mm)
Han-Eco® A, Hoods, With integrated cable gland, Top entry 	1x M20 1x M25	6 ... 13 9 ... 17	19 46 116 0445 19 46 116 0446	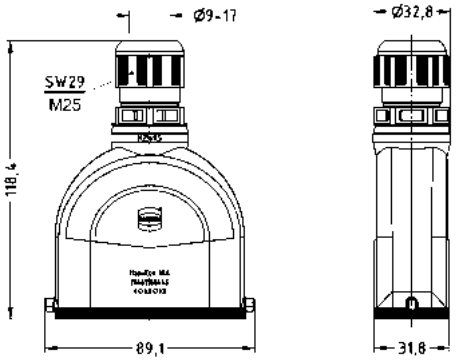
Han-Eco® A, Hoods, With integrated cable gland, Side entry 	1x M20 1x M25	6 ... 13 9 ... 17	19 46 116 0545 19 46 116 0546	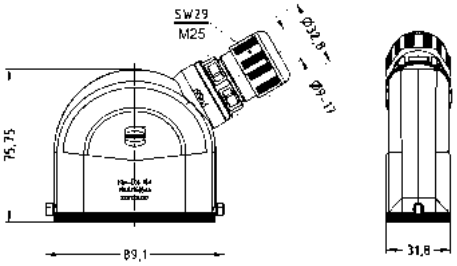
Han-Eco® A, Bulkhead mounted housings 			19 46 016 0301	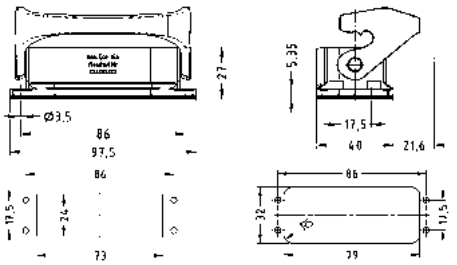 Panel cut out Front mounting / Rear mounting

Identification	Cable entry	Clamping range (mm)	Part number	Drawing (dimensions in mm)
Han-Eco® A, Bulkhead mounted housings, With thermo-plastic cover 			19 46 016 0302	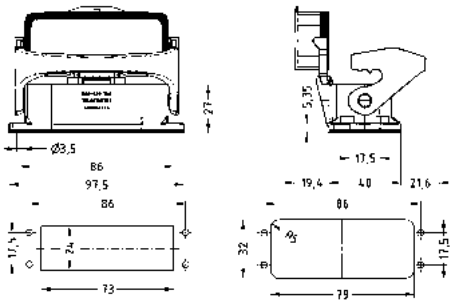 Panel cut out Front mounting / Rear mounting
Han-Eco® A, Surface mounted housing, With integrated cable gland, Side entry 	1x M20 1x M25 2x M20 2x M25	6 ... 13 9 ... 17 6 ... 13 9 ... 17	19 46 116 0250 19 46 116 0251 19 46 116 0290 19 46 116 0291	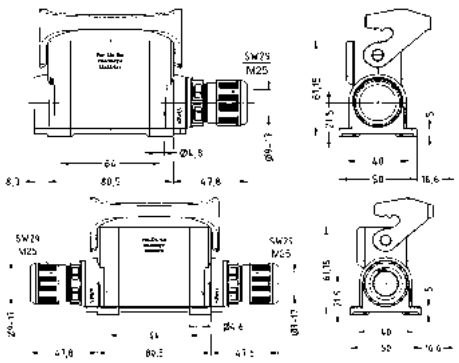
Han-Eco® A, Surface mounted housing, With thermo-plastic cover, With integrated cable gland, Side entry 	1x M20 1x M25 2x M20 2x M25	6 ... 13 9 ... 17 6 ... 13 9 ... 17	19 46 116 0252 19 46 116 0253 19 46 116 0292 19 46 116 0293	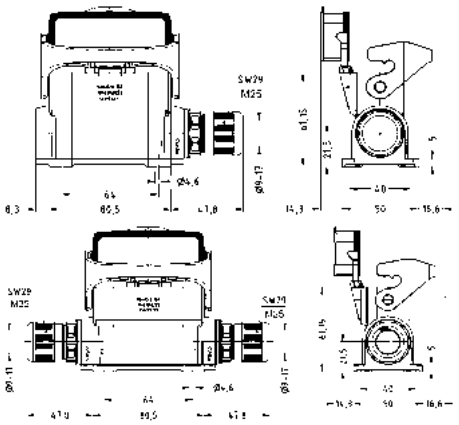
Han-Eco® A, Cable to cable housing, With integrated cable gland, Top entry 	1x M20 1x M25	6 ... 13 9 ... 17	19 46 116 0435 19 46 116 0436	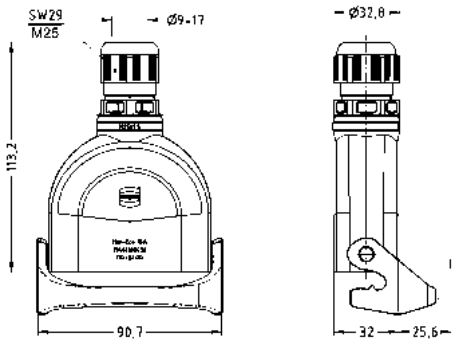

Identification	Cable entry	Clamping range (mm)	Part number	Drawing (dimensions in mm)
Han-Eco® A, Protection cover, for bulkhead mounted housings, for surface mounted housings 			19 46 016 5425	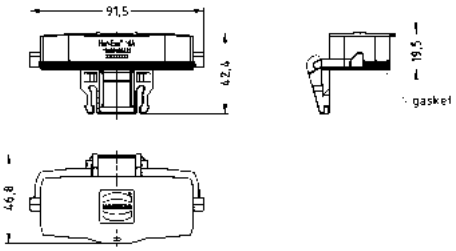

Han-Eco® A for outdoor applications

Features

- With integrated cable gland
- Suitable for applications according to protection class II

Technical characteristics

Limiting temperature	-40 ... +125 °C
Degree of protection acc. to IEC 60529	IP65
Material (hood/housing)	Polyamide, Fibre-glass reinforced
Colour (hood/housing)	RAL 9005 (jet black)
Material (seal)	FPM
Colour (seal)	RAL 7001 (silver-grey)
Material (locking)	Polyamide, Fibre-glass reinforced
Colour (locking)	RAL 9005 (jet black)
Material flammability class acc. to UL 94	V-0
Material flammability class acc. to UL 94 (locking levers)	V-0
RoHS	compliant with exemption, compliant
RoHS exemptions	**6c:** Copper alloy containing up to 4 % lead by weight

Specifications and approvals

IEC 61984
EN 45545-2
R22: HL1, HL2, HL3
R23: HL1, HL2, HL3
R24: HL1, HL2, HL3

Details

Assembly dimensions are identical for the Han® A bulkhead and surface mounted housings – mating compatible with all metal hoods and housings of the series Han® A.

As an option a larger panel cut out for the rear assembly of the bulkhead mounted housings is possible.

Single locking lever

Identification	Cable entry	Clamping range (mm)	Part number	Drawing (dimensions in mm)
Han-Eco® A, Hoods, With integrated cable gland, Top entry 	1x M20 1x M25	6 ... 13 9 ... 17	19 46 310 0445 19 46 310 0446	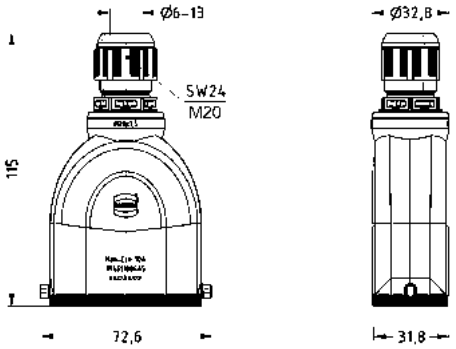
Han-Eco® A, Hoods, With integrated cable gland, Side entry 	1x M20 1x M25	6 ... 13 9 ... 17	19 46 310 0545 19 46 310 0546	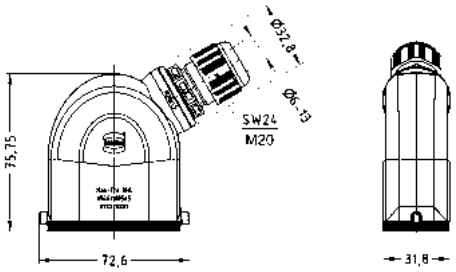
Han-Eco® A, Bulkhead mounted housings 			19 46 210 0301	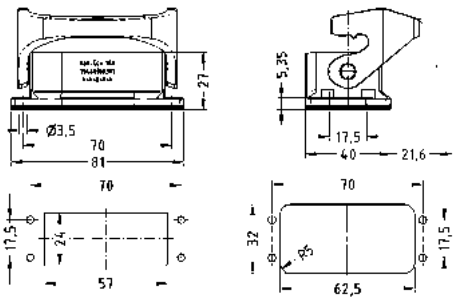 Panel cut out Front mounting / Rear mounting

Han-Eco® A for outdoor applications Size 10 A

Identification	Cable entry	Clamping range (mm)	Part number	Drawing (dimensions in mm)
Han-Eco® A, Bulkhead mounted housings, With thermo-plastic cover 			19 46 210 0302	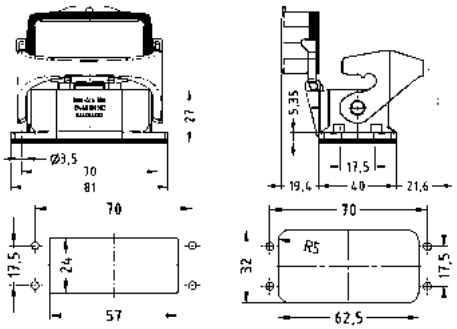 Panel cut out Front mounting / Rear mounting
Han-Eco® A, Surface mounted housing, With integrated cable gland, Side entry 	1x M20 1x M25 2x M20 2x M25	6 ... 13 9 ... 17 6 ... 13 9 ... 17	19 46 110 0250 19 46 110 0251 19 46 110 0290 19 46 110 0291	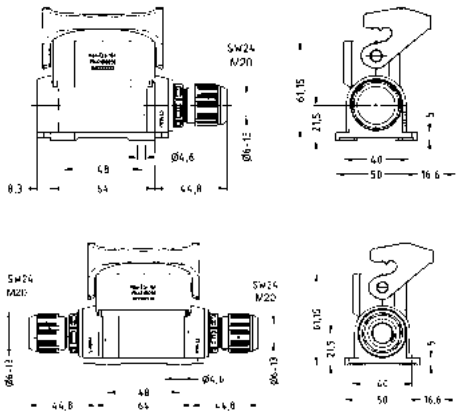
Han-Eco® A, Surface mounted housing, With thermo-plastic cover, With integrated cable gland, Side entry 	1x M20 1x M25 2x M20 2x M25	6 ... 13 9 ... 17 6 ... 13 9 ... 17	19 46 310 0252 19 46 310 0253 19 46 310 0292 19 46 310 0293	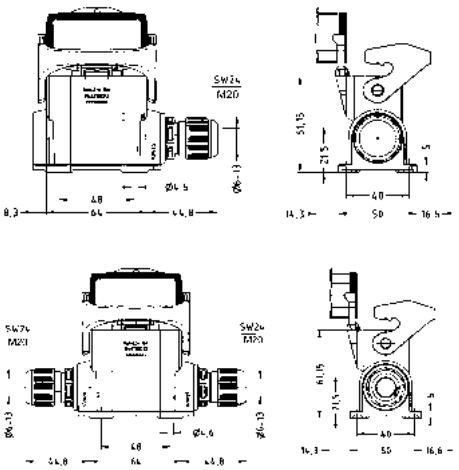

Identification	Cable entry	Clamping range (mm)	Part number	Drawing (dimensions in mm)
Han-Eco® A, Cable to cable housing, With integrated cable gland, Top entry 	1x M20 1x M25	6 ... 13 9 ... 17	19 46 110 0435 19 46 110 0436	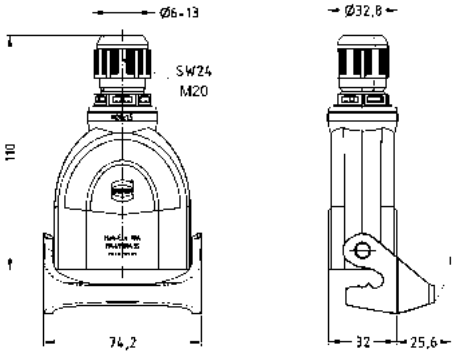
Han-Eco® A, Protection cover, for bulkhead mounted housings, for surface mounted housings 			19 46 210 5425	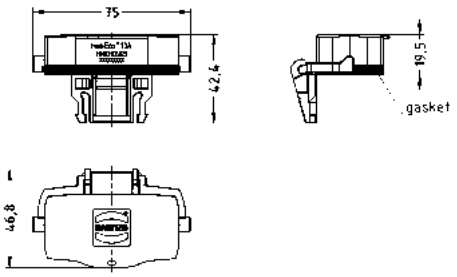

Single locking lever



Identification	Cable entry	Clamping range (mm)	Part number	Drawing (dimensions in mm)
Han-Eco® A, Hoods, With integrated cable gland, Top entry 	1x M20 1x M25	6 ... 13 9 ... 17	19 46 316 0445 19 46 316 0446	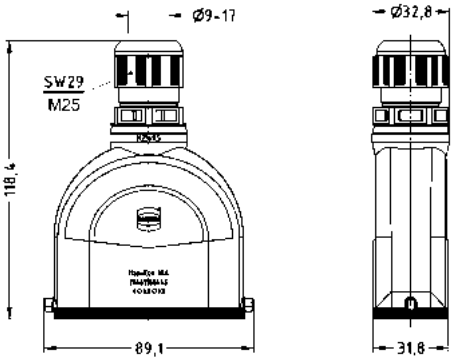
Han-Eco® A, Hoods, With integrated cable gland, Side entry 	1x M20 1x M25	6 ... 13 9 ... 17	19 46 316 0545 19 46 316 0546	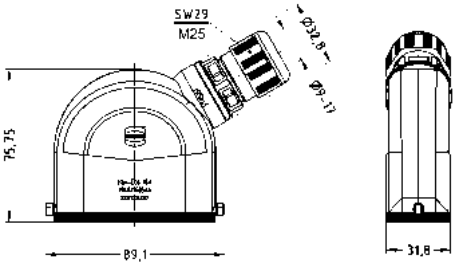
Han-Eco® A, Bulkhead mounted housings 			19 46 216 0301	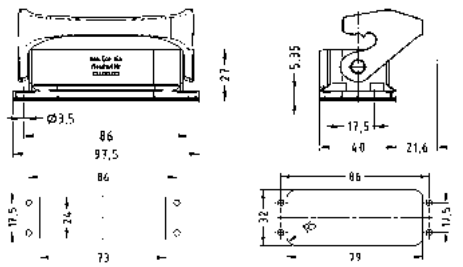 Panel cut out Front mounting / Rear mounting

Identification	Cable entry	Clamping range (mm)	Part number	Drawing (dimensions in mm)
Han-Eco® A, Bulkhead mounted housings, With thermo-plastic cover 			19 46 216 0302	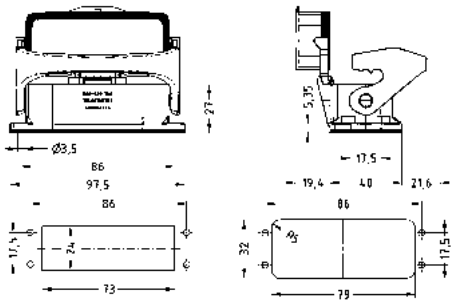 Panel cut out Front mounting / Rear mounting
Han-Eco® A, Surface mounted housing, With integrated cable gland, Side entry 	1x M20 1x M25 2x M20 2x M25	6 ... 13 9 ... 17 6 ... 13 9 ... 17	19 46 116 0250 19 46 116 0251 19 46 116 0290 19 46 116 0291	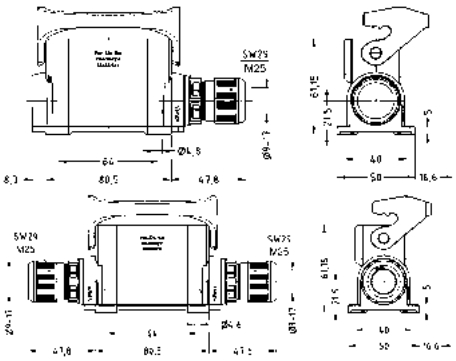
Han-Eco® A, Surface mounted housing, With thermo-plastic cover, With integrated cable gland, Side entry 	1x M20 1x M25 2x M20 2x M25	6 ... 13 9 ... 17 6 ... 13 9 ... 17	19 46 316 0252 19 46 316 0253 19 46 316 0292 19 46 316 0293	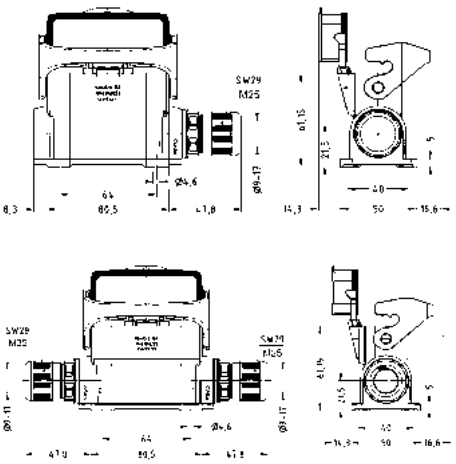
Han-Eco® A, Cable to cable housing, With integrated cable gland, Top entry 	1x M20 1x M25	6 ... 13 9 ... 17	19 46 116 0435 19 46 116 0436	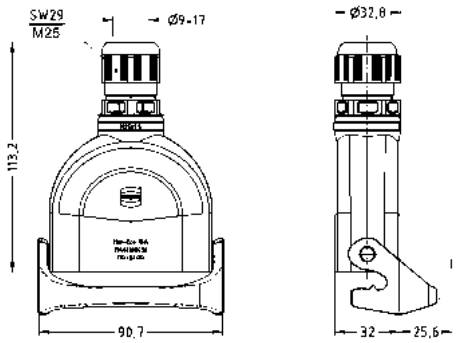

Han-Eco® A for outdoor applications

Size 16 A

Identification	Cable entry	Clamping range (mm)	Part number	Drawing (dimensions in mm)
Han-Eco® A, Protection cover, for bulkhead mounted housings, for surface mounted housings 			19 46 216 5425	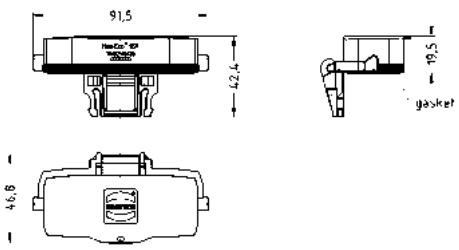

Han-Eco® B for industrial applications

Features

- Suitable for standard inserts and modules from the Han-Modular® portfolio
- With integrated cable gland
- Suitable for applications according to protection class II
- Minimal weight with excellent mechanical robustness

Technical characteristics

Limiting temperature	-40 ... +125 °C
Degree of protection acc. to IEC 60529	IP65
Material (hood/housing)	Polyamide, Fibre-glass reinforced
Colour (hood/housing)	RAL 9005 (jet black)
Material (seal)	NBR
Colour (seal)	RAL 9005 (jet black)
Material (locking)	Polyamide, Fibre-glass reinforced
Colour (locking)	RAL 9005 (jet black)
Material flammability class acc. to UL 94	V-0
Material flammability class acc. to UL 94 (locking levers)	V-0

Specifications and approvals

IEC 61984
EN 45545-2
R22: HL1, HL2, HL3
R23: HL1, HL2, HL3
R24: HL1, HL2, HL3

Details

Mating compatible with all metal hoods and housings of the series Han® B.

As an option a larger panel cut out for the rear assembly of the bulkhead mounted housings is possible.

Available as from July 2018

Single locking lever

Identification	Cable entry	Clamping range (mm)	Part number	Drawing (dimensions in mm)
Han-Eco® B, Hoods, With integrated cable gland, Top entry 	1x M20 1x M25 1x M32	6 ... 13 9 ... 17 13 ... 21	19 43 106 0445 19 43 106 0446 19 43 106 0447	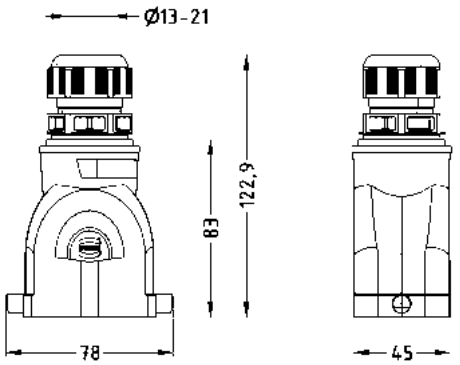
Han-Eco® B, Hoods, With integrated cable gland, Side entry 	1x M20 1x M25 1x M32	6 ... 13 9 ... 17 13 ... 21	19 43 106 0545 19 43 106 0546 19 43 106 0547	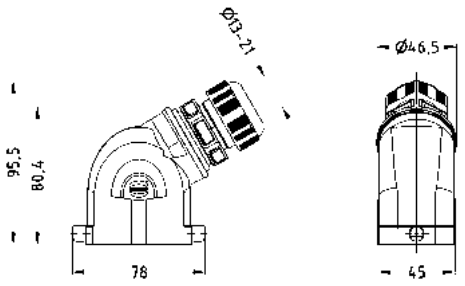
Han-Eco® B, Bulkhead mounted housings 			19 43 006 0340	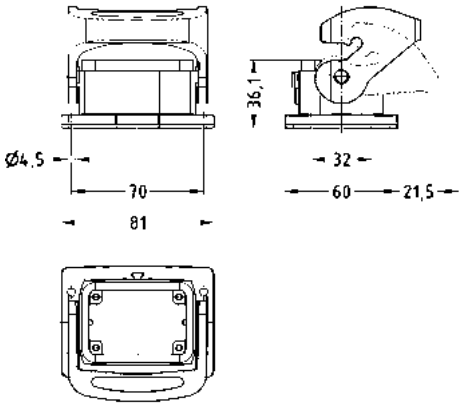

Identification	Cable entry	Clamping range (mm)	Part number	Drawing (dimensions in mm)
Han-Eco® B, Bulkhead mounted housings, With thermo-plastic cover 			19 43 006 0341	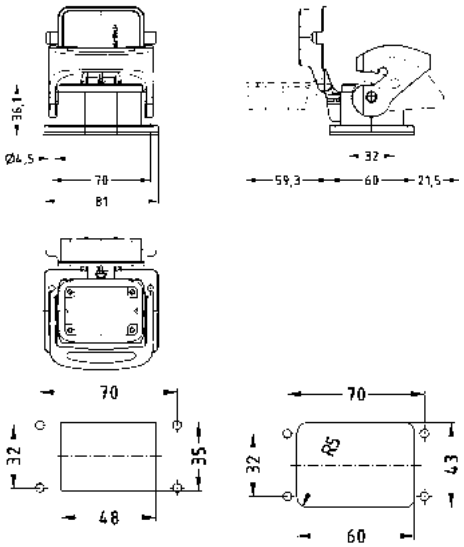 Panel cut out Front mounting / Rear mounting
Han-Eco® B, Surface mounted housing, With integrated cable gland, Side entry 	1x M20 1x M25 1x M32 2x M20 2x M25 2x M32	6 ... 13 9 ... 17 13 ... 21 6 ... 13 9 ... 17 13 ... 21	19 43 106 0250 19 43 106 0251 19 43 106 0252 19 43 106 0290 19 43 106 0291 19 43 106 0292	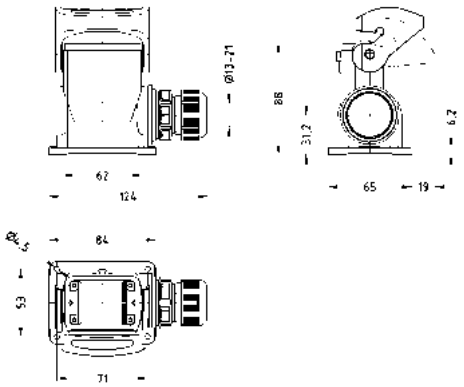
Han-Eco® B, Surface mounted housing, With thermo-plastic cover, With integrated cable gland, Side entry 	1x M20 1x M25 1x M32 2x M20 2x M25 2x M32	6 ... 13 9 ... 17 13 ... 21 6 ... 13 9 ... 17 13 ... 21	19 43 106 0255 19 43 106 0256 19 43 106 0257 19 43 106 0295 19 43 106 0296 19 43 106 0297	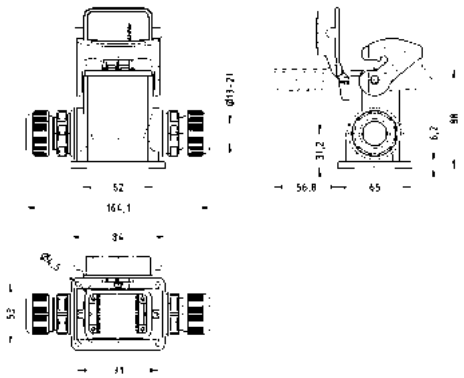

Identification	Cable entry	Clamping range (mm)	Part number	Drawing (dimensions in mm)
Han-Eco® B, Cable to cable housing, With integrated cable gland, Top entry 	1x M20 1x M25 1x M32	6 ... 13 9 ... 17 13 ... 21	19 43 106 0755 19 43 106 0756 19 43 106 0757	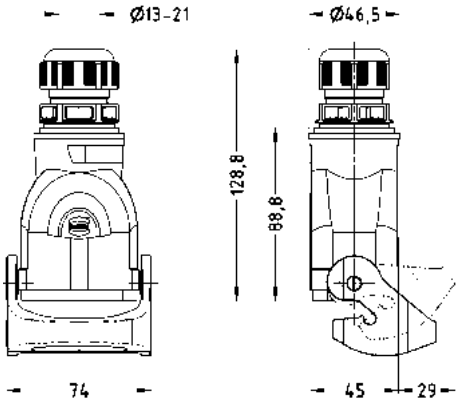
Han-Eco® B, Protection cover, for hoods			19 43 006 5442	
Han-Eco® B, Protection cover, for bulkhead mounted housings, for surface mounted housings			19 43 006 5410	
Han-Eco® B, Protection cover, for cable to cable housing			19 43 006 5446	

Double locking lever

Identification	Cable entry	Clamping range (mm)	Part number	Drawing (dimensions in mm)
Han-Eco® B, Hoods, With integrated cable gland, Top entry 	1x M20 1x M25 1x M32	6 ... 13 9 ... 17 13 ... 21	19 43 110 0425 19 43 110 0426 19 43 110 0427	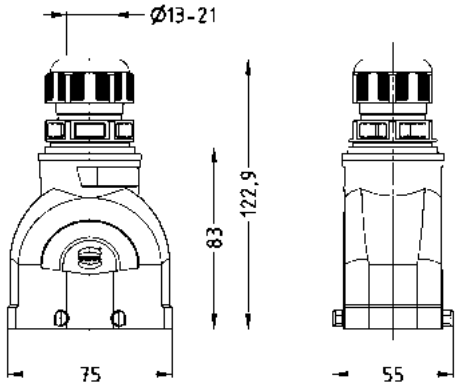
Han-Eco® B, Hoods, With integrated cable gland, Side entry 	1x M20 1x M25 1x M32	6 ... 13 9 ... 17 13 ... 21	19 43 110 0525 19 43 110 0526 19 43 110 0527	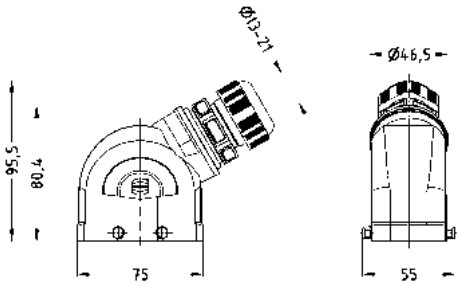
Han-Eco® B, Bulkhead mounted housings 			19 43 010 0320	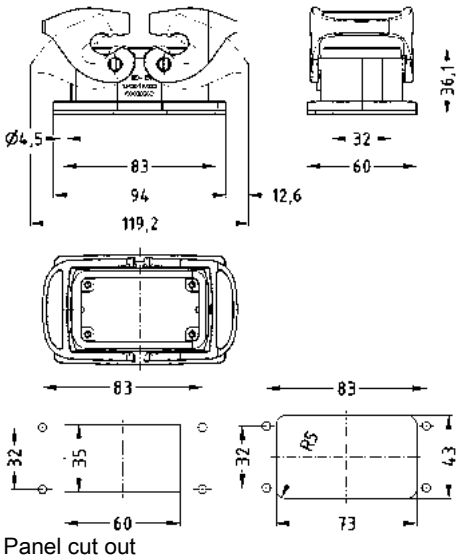 Panel cut out Front mounting / Rear mounting

Identification	Cable entry	Clamping range (mm)	Part number	Drawing (dimensions in mm)
Han-Eco® B, Surface mounted housing, With integrated cable gland, Side entry 	1x M20 1x M25 1x M32 1x M40 2x M20 2x M25 2x M32	6 ... 13 9 ... 17 13 ... 21 16 ... 28 6 ... 13 9 ... 17 13 ... 21	19 43 110 0230 19 43 110 0231 19 43 110 0232 19 43 110 0233 19 43 110 0270 19 43 110 0271 19 43 110 0272	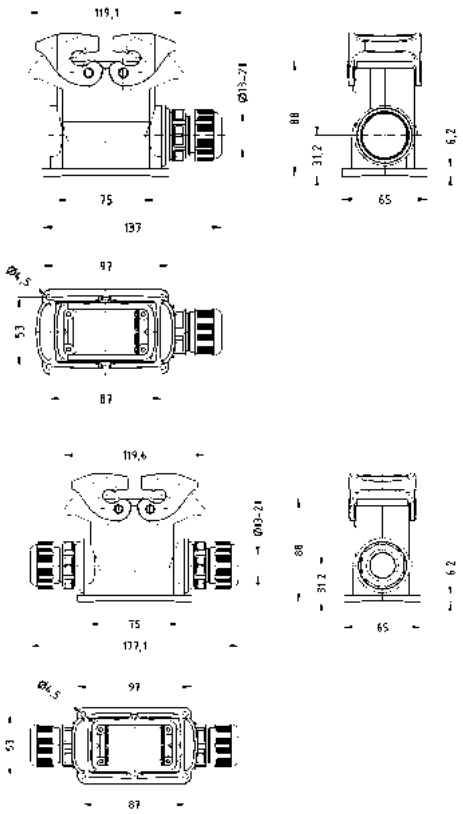
Han-Eco® B, Cable to cable housing, With integrated cable gland, Top entry 	1x M20 1x M25 1x M32	6 ... 13 9 ... 17 13 ... 21	19 43 110 0735 19 43 110 0736 19 43 110 0737	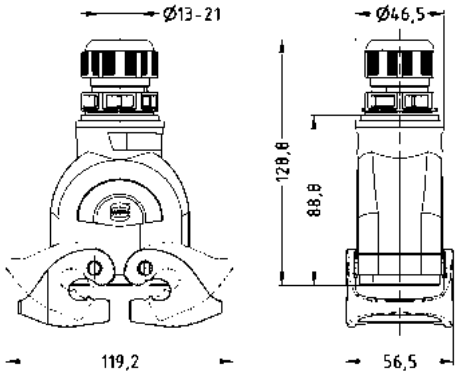
Han-Eco® B, Protection cover, for hoods Han-Eco® B, Protection cover, for bulkhead mounted housings, for surface mounted housings 			19 43 010 5422 19 43 010 5425	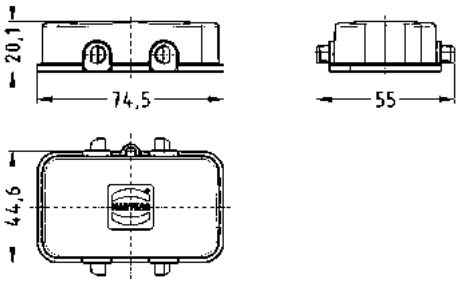

Identification	Cable entry	Clamping range (mm)	Part number	Drawing (dimensions in mm)
Han-Eco® B, Protection cover, for cable to cable housing			19 43 010 5426	

Double locking lever (on the hood)

Identification	Cable entry	Clamping range (mm)	Part number	Drawing (dimensions in mm)
Han-Eco® B, Hoods, With integrated cable gland, Top entry 	1x M32	13 ... 21	19 43 110 0437	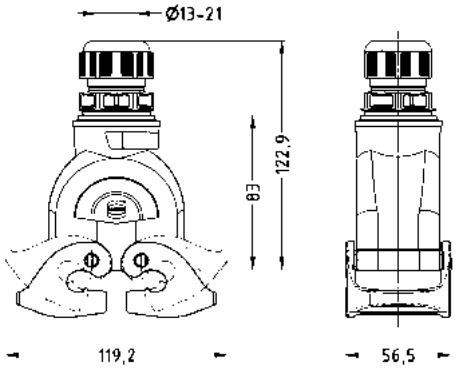
Han-Eco® B, Hoods, With integrated cable gland, Side entry	1x M32	13 ... 21	19 43 110 0537	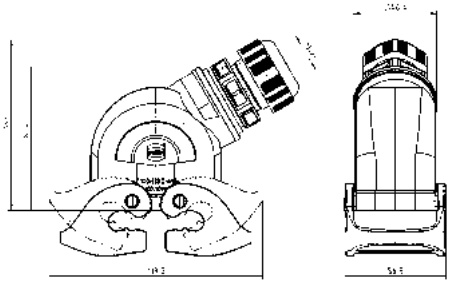
Han-Eco® B, Bulkhead mounted housings, With thermo-plastic cover 			19 43 010 0322	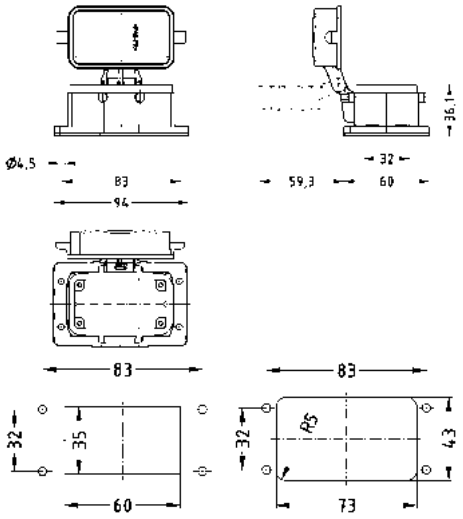 Panel cut out Front mounting / Rear mounting

Identification	Cable entry	Clamping range (mm)	Part number	Drawing (dimensions in mm)
Han-Eco® B, Surface mounted housing, With thermo-plastic cover, With integrated cable gland, Side entry 	1x M32 2x M32	13 ... 21 13 ... 21	19 43 110 0227 19 43 110 0267	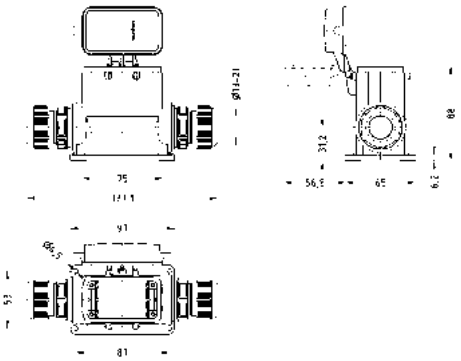

Single locking lever

Identification	Cable entry	Clamping range (mm)	Part number	Drawing (dimensions in mm)
Han-Eco® B, Hoods, With integrated cable gland, Top entry 	1x M20 1x M25 1x M32	6 ... 13 9 ... 17 13 ... 21	19 43 110 0445 19 43 110 0446 19 43 110 0447	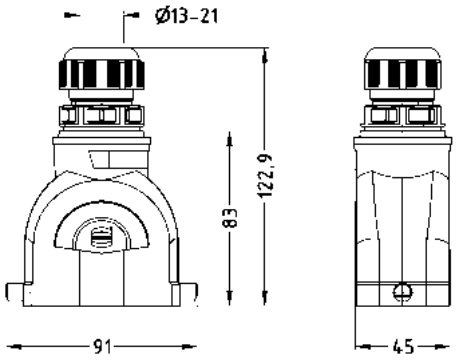
Han-Eco® B, Hoods, With integrated cable gland, Side entry 	1x M20 1x M25 1x M32	6 ... 13 9 ... 17 13 ... 21	19 43 110 0545 19 43 110 0546 19 43 110 0547	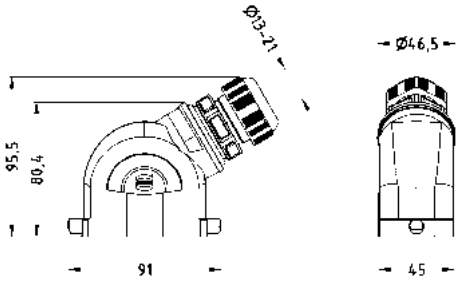
Han-Eco® B, Bulkhead mounted housings 			19 43 010 0340	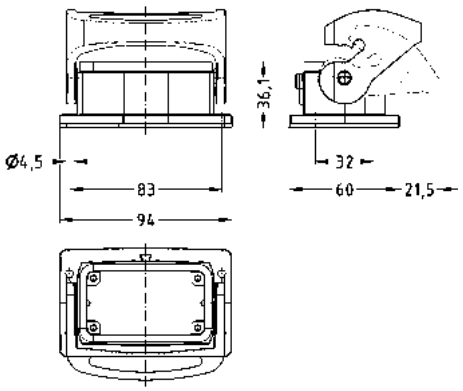

Identification	Cable entry	Clamping range (mm)	Part number	Drawing (dimensions in mm)
Han-Eco® B, Bulkhead mounted housings, With thermo-plastic cover 			19 43 010 0341	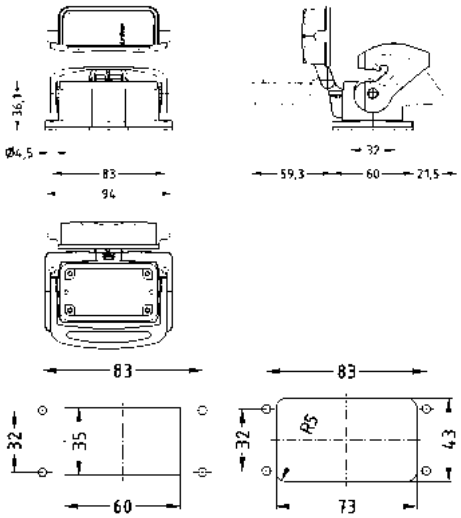 Panel cut out Front mounting / Rear mounting
Han-Eco® B, Surface mounted housing, With integrated cable gland, Side entry 	1x M20 1x M25 1x M32 2x M20 2x M25 2x M32	6 ... 13 9 ... 17 13 ... 21 6 ... 13 9 ... 17 13 ... 21	19 43 110 0250 19 43 110 0251 19 43 110 0252 19 43 110 0290 19 43 110 0291 19 43 110 0292	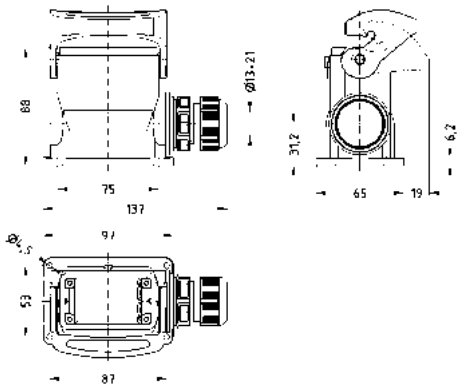
Han-Eco® B, Surface mounted housing, With thermo-plastic cover, With integrated cable gland, Side entry 	1x M20 1x M25 1x M32 2x M20 2x M25 2x M32	6 ... 13 9 ... 17 13 ... 21 6 ... 13 9 ... 17 13 ... 21	19 43 110 0255 19 43 110 0256 19 43 110 0257 19 43 110 0295 19 43 110 0296 19 43 110 0297	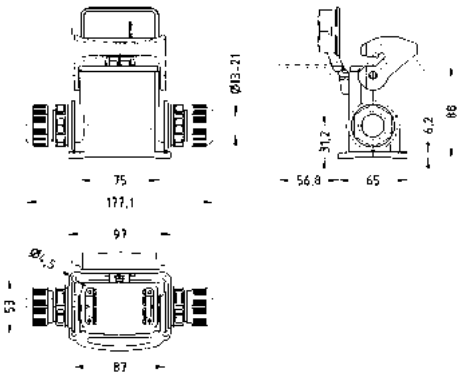

Identification	Cable entry	Clamping range (mm)	Part number	Drawing (dimensions in mm)
Han-Eco® B, Cable to cable housing, With integrated cable gland, Top entry 	1x M20 1x M25 1x M32	6 ... 13 9 ... 17 13 ... 21	19 43 110 0755 19 43 110 0756 19 43 110 0757	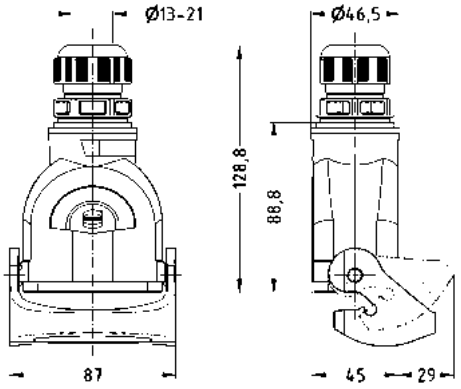
Han-Eco® B, Protection cover, for hoods			19 43 010 5442	
Han-Eco® B, Protection cover, for bulkhead mounted housings, for surface mounted housings			19 43 010 5410	
Han-Eco® B, Protection cover, for cable to cable housing			19 43 010 5446	

Double locking lever

Identification	Cable entry	Clamping range (mm)	Part number	Drawing (dimensions in mm)
Han-Eco® B, Hoods, With integrated cable gland, Top entry 	1x M25 1x M32 1x M40	9 ... 17 13 ... 21 16 ... 28	19 43 116 0426 19 43 116 0427 19 43 116 0428	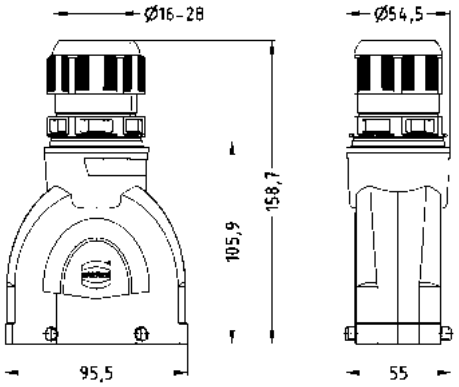
Han-Eco® B, Hoods, With integrated cable gland, Side entry 	1x M25 1x M32 1x M40	9 ... 17 13 ... 21 16 ... 28	19 43 116 0526 19 43 116 0527 19 43 116 0528	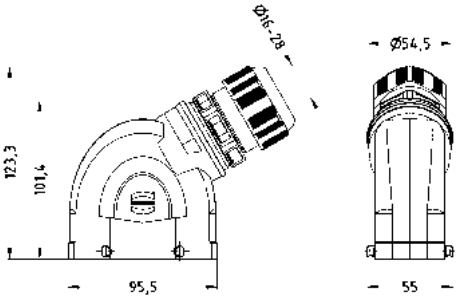
Han-Eco® B, Bulkhead mounted housings 			19 43 016 0320	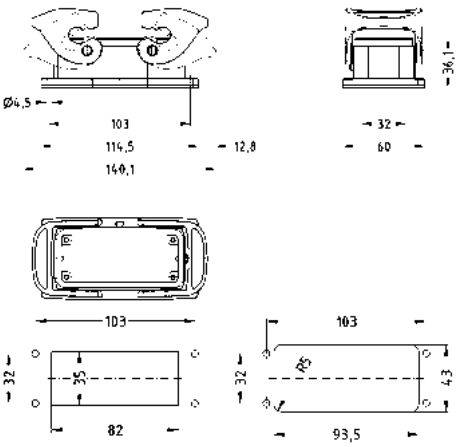 Panel cut out Front mounting / Rear mounting

Identification	Cable entry	Clamping range (mm)	Part number	Drawing (dimensions in mm)
Han-Eco® B, Surface mounted housing, With integrated cable gland, Side entry 	1x M25 1x M32 1x M40 2x M25 2x M32 2x M40	9 ... 17 13 ... 21 16 ... 28 9 ... 17 13 ... 21 16 ... 28	19 43 116 0231 19 43 116 0232 19 43 116 0233 19 43 116 0271 19 43 116 0272 19 43 116 0273	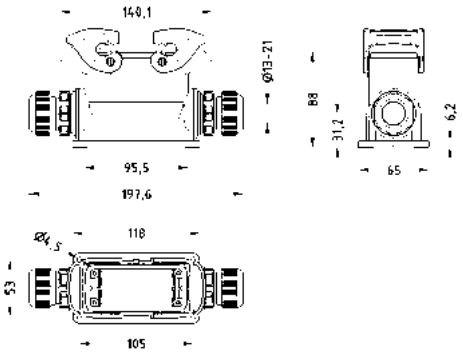
Han-Eco® B, Cable to cable housing, With integrated cable gland, Top entry 	1x M25 1x M32 1x M40	9 ... 17 13 ... 21 16 ... 28	19 43 116 0736 19 43 116 0737 19 43 116 0738	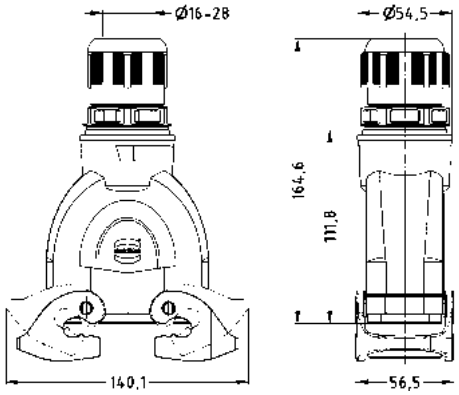
Han-Eco® B, Protection cover, for hoods			19 43 016 5422	
Han-Eco® B, Protection cover, for bulkhead mounted housings, for surface mounted housings 			19 43 016 5425	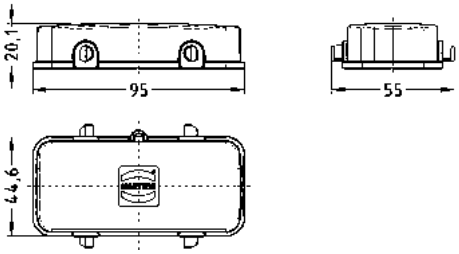
Han-Eco® B, Protection cover, for cable to cable housing			19 43 016 5426	

Double locking lever (on the hood)

Identification	Cable entry	Clamping range (mm)	Part number	Drawing (dimensions in mm)
Han-Eco® B, Hoods, With integrated cable gland, Top entry 	1x M40	16 ... 28	19 43 116 0438	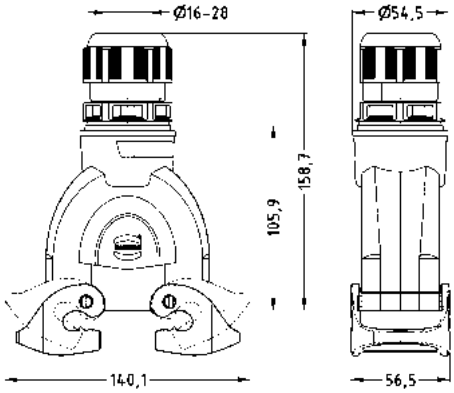
Han-Eco® B, Hoods, With integrated cable gland, Side entry	1x M40	16 ... 28	19 43 116 0538	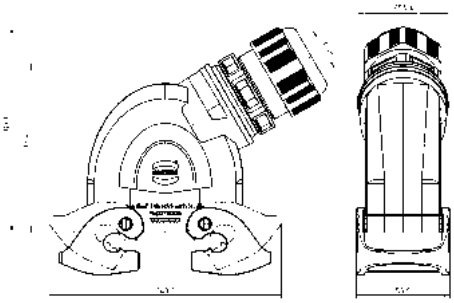
Han-Eco® B, Bulkhead mounted housings, With thermo-plastic cover 			19 43 016 0322	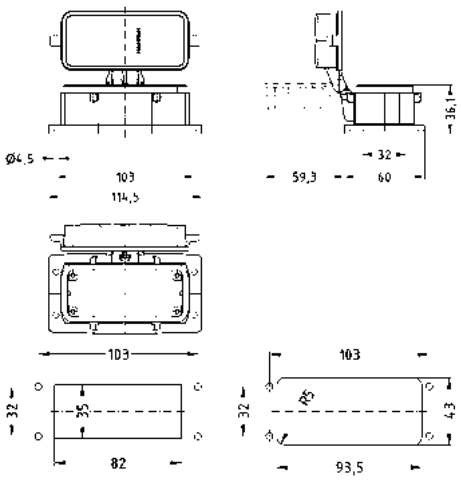 Panel cut out Front mounting / Rear mounting

Identification	Cable entry	Clamping range (mm)	Part number	Drawing (dimensions in mm)
Han-Eco® B, Surface mounted housing, With thermo-plastic cover, With integrated cable gland, Side entry 	1x M40 2x M40	16 ... 28 16 ... 28	19 43 116 0228 19 43 116 0268	

Single locking lever

Identification	Cable entry	Clamping range (mm)	Part number	Drawing (dimensions in mm)
Han-Eco® B, Hoods, With integrated cable gland, Top entry 	1x M25 1x M32 1x M40	9 ... 17 13 ... 21 16 ... 28	19 43 116 0446 19 43 116 0447 19 43 116 0448	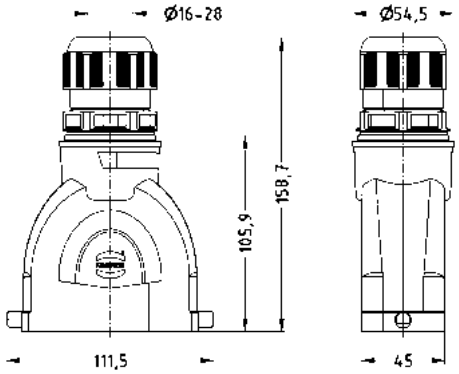
Han-Eco® B, Hoods, With integrated cable gland, Side entry 	1x M25 1x M32 1x M40	9 ... 17 13 ... 21 16 ... 28	19 43 116 0546 19 43 116 0547 19 43 116 0548	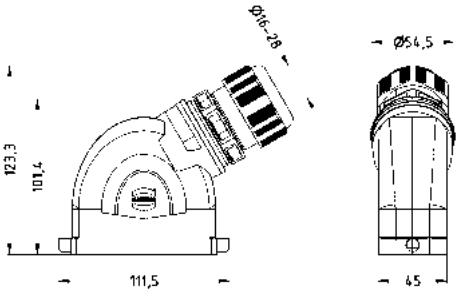
Han-Eco® B, Bulkhead mounted housings 			19 43 016 0340	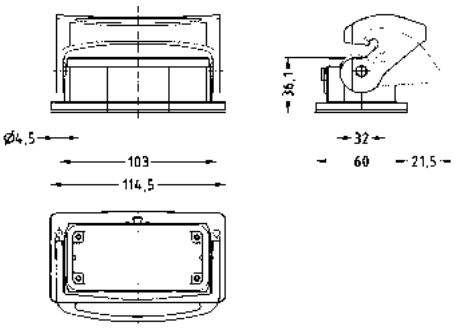

Identification	Cable entry	Clamping range (mm)	Part number	Drawing (dimensions in mm)
Han-Eco® B, Bulkhead mounted housings, With thermo-plastic cover 			19 43 016 0341	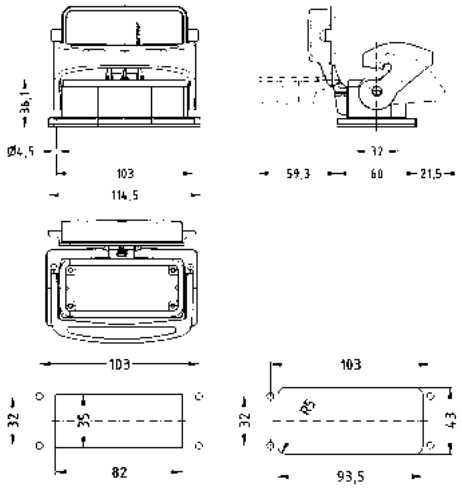 Panel cut out Front mounting / Rear mounting
Han-Eco® B, Surface mounted housing, With integrated cable gland, Side entry 	1x M25 1x M32 1x M40 2x M25 2x M32 2x M40	9 ... 17 13 ... 21 16 ... 28 9 ... 17 13 ... 21 16 ... 28	19 43 116 0251 19 43 116 0252 19 43 116 0253 19 43 116 0291 19 43 116 0292 19 43 116 0293	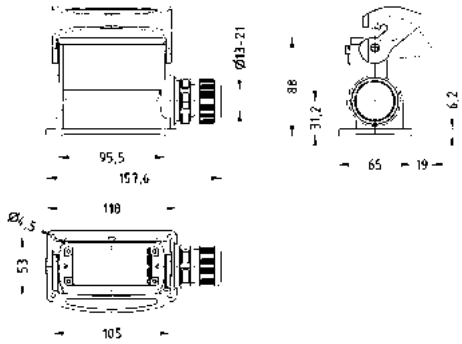
Han-Eco® B, Surface mounted housing, With thermo-plastic cover, With integrated cable gland, Side entry 	1x M25 1x M32 1x M40 2x M25 2x M32 2x M40	9 ... 17 13 ... 21 16 ... 28 9 ... 17 13 ... 21 16 ... 28	19 43 116 0256 19 43 116 0257 19 43 116 0258 19 43 116 0296 19 43 116 0297 19 43 116 0298	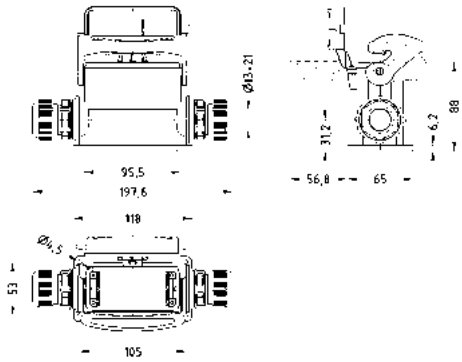

Identification	Cable entry	Clamping range (mm)	Part number	Drawing (dimensions in mm)
Han-Eco® B, Cable to cable housing, With integrated cable gland, Top entry 	1x M25 1x M32 1x M40	9 ... 17 13 ... 21 16 ... 28	19 43 116 0756 19 43 116 0757 19 43 116 0758	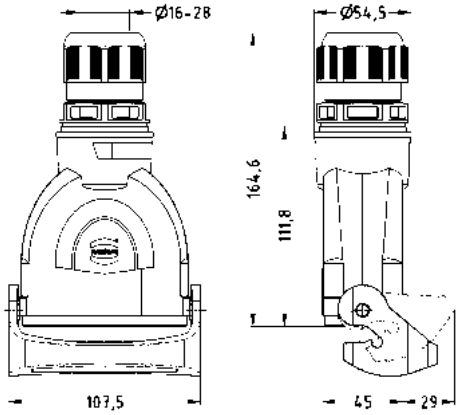
Han-Eco® B, Protection cover, for hoods			19 43 016 5442	
Han-Eco® B, Protection cover, for bulkhead mounted housings, for surface mounted housings			19 43 016 5410	
Han-Eco® B, Protection cover, for cable to cable housing			19 43 016 5446	

Double locking lever

Identification	Cable entry	Clamping range (mm)	Part number	Drawing (dimensions in mm)
Han-Eco® B, Hoods, With integrated cable gland, Top entry 	1x M32 1x M40	13 ... 21 16 ... 28	19 43 124 0427 19 43 124 0428	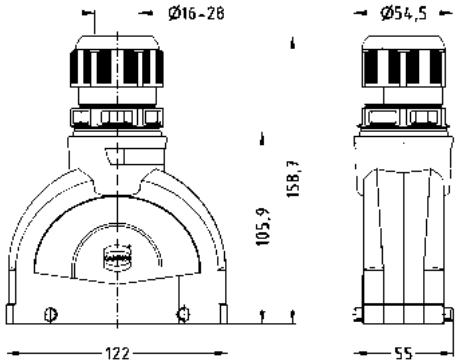
Han-Eco® B, Hoods, With integrated cable gland, Side entry 	1x M32 1x M40	13 ... 21 16 ... 28	19 43 124 0527 19 43 124 0528	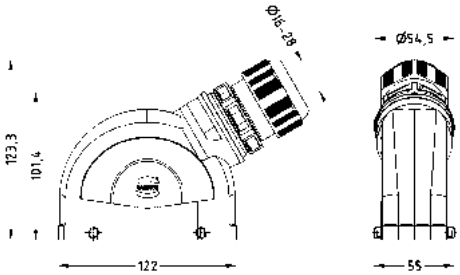
Han-Eco® B, Bulkhead mounted housings 			19 43 024 0320	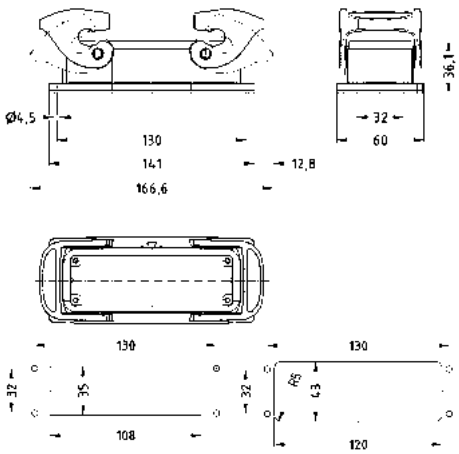 Panel cut out Front mounting / Rear mounting

Identification	Cable entry	Clamping range (mm)	Part number	Drawing (dimensions in mm)
Han-Eco® B, Surface mounted housing, With integrated cable gland, Side entry 	1x M25 1x M32 1x M40 2x M25 2x M32 2x M40	9 ... 17 13 ... 21 16 ... 28 9 ... 17 13 ... 21 16 ... 28	19 43 124 0231 19 43 124 0232 19 43 124 0233 19 43 124 0271 19 43 124 0272 19 43 124 0273	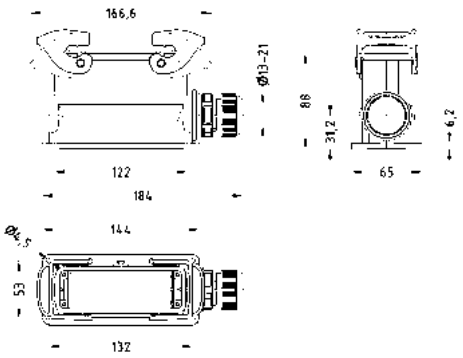
Han-Eco® B, Cable to cable housing, With integrated cable gland, Top entry 	1x M32 1x M40	13 ... 21 16 ... 28	19 43 124 0737 19 43 124 0738	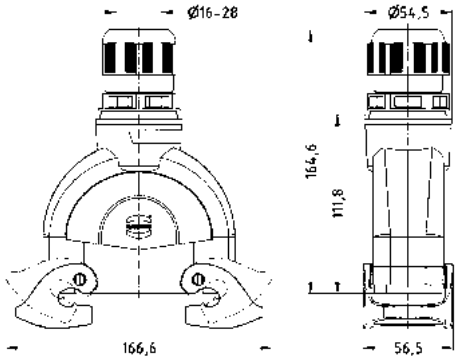
Han-Eco® B, Protection cover, for hoods			19 43 024 5422	
Han-Eco® B, Protection cover, for bulkhead mounted housings, for surface mounted housings 			19 43 024 5425	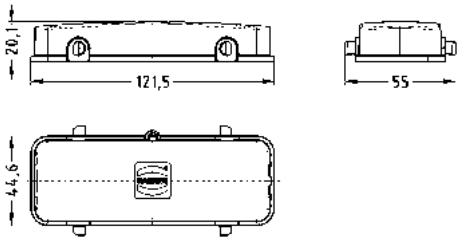
Han-Eco® B, Protection cover, for cable to cable housing			19 43 024 5426	

Double locking lever (on the hood)

Identification	Cable entry	Clamping range (mm)	Part number	Drawing (dimensions in mm)
Han-Eco® B, Hoods, With integrated cable gland, Top entry 	1x M40	16 ... 28	19 43 124 0438	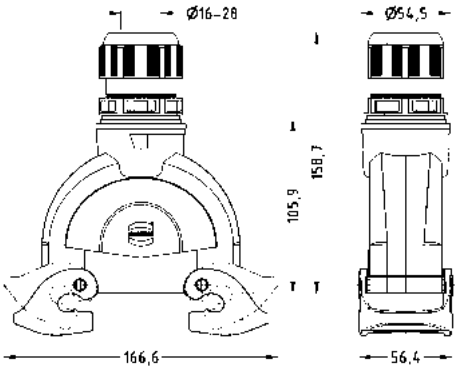
Han-Eco® B, Hoods, With integrated cable gland, Side entry	1x M40	16 ... 28	19 43 124 0538	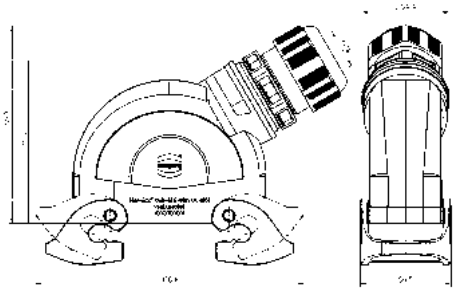
Han-Eco® B, Bulkhead mounted housings, With thermo-plastic cover 			19 43 024 0322	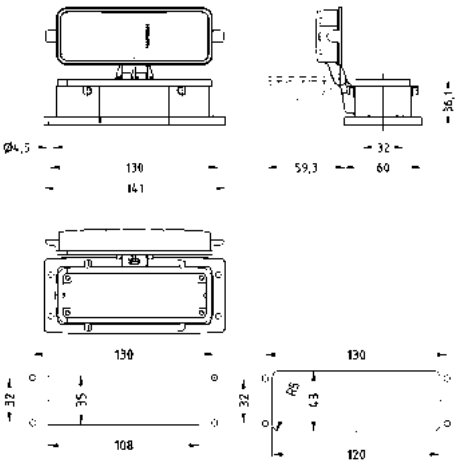 Panel cut out Front mounting / Rear mounting

Identification	Cable entry	Clamping range (mm)	Part number	Drawing (dimensions in mm)
Han-Eco® B, Surface mounted housing, With thermo-plastic cover, With integrated cable gland, Side entry 	1x M32 1x M40 2x M32 2x M40	13 ... 21 16 ... 28 13 ... 21 16 ... 28	19 43 124 0227 19 43 124 0228 19 43 124 0267 19 43 124 0268	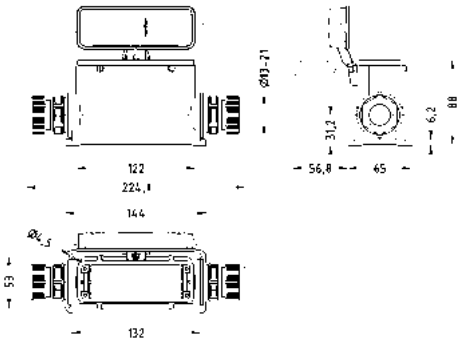

Single locking lever

Identification	Cable entry	Clamping range (mm)	Part number	Drawing (dimensions in mm)
Han-Eco® B, Hoods, With integrated cable gland, Top entry 	1x M32 1x M40	13 ... 21 16 ... 28	19 43 124 0447 19 43 124 0448	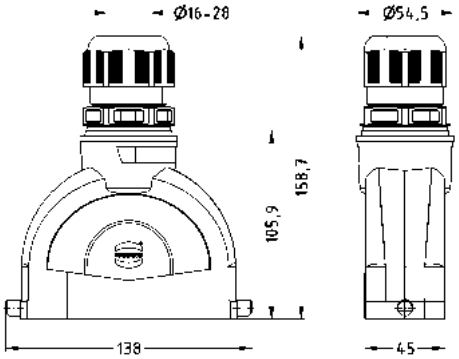
Han-Eco® B, Hoods, With integrated cable gland, Side entry 	1x M32 1x M40	13 ... 21 16 ... 28	19 43 124 0547 19 43 124 0548	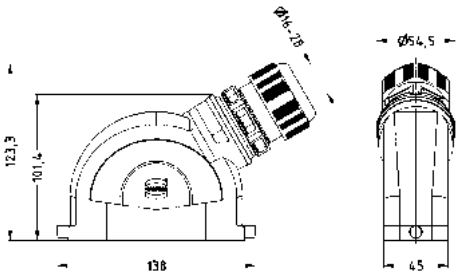
Han-Eco® B, Bulkhead mounted housings 			19 43 024 0340	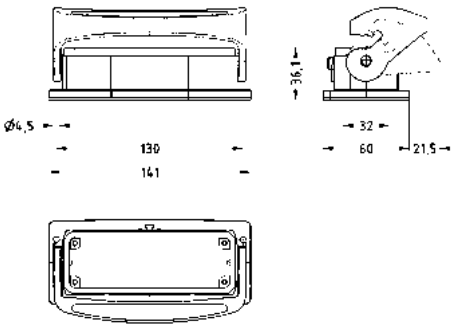

Identification	Cable entry	Clamping range (mm)	Part number	Drawing (dimensions in mm)
Han-Eco® B, Bulkhead mounted housings, With thermo-plastic cover 			19 43 024 0341	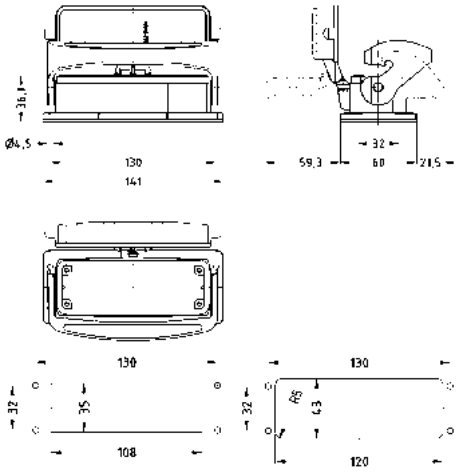 Panel cut out Front mounting / Rear mounting
Han-Eco® B, Surface mounted housing, With integrated cable gland, Side entry 	1x M25 1x M32 1x M40 2x M25 2x M32 2x M40	9 ... 17 13 ... 21 16 ... 28 9 ... 17 13 ... 21 16 ... 28	19 43 124 0251 19 43 124 0252 19 43 124 0253 19 43 124 0291 19 43 124 0292 19 43 124 0293	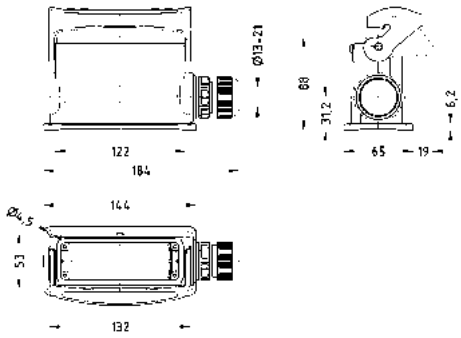
Han-Eco® B, Surface mounted housing, With thermo-plastic cover, With integrated cable gland, Side entry 	1x M25 1x M32 1x M40 2x M25 2x M32 2x M40	9 ... 17 13 ... 21 16 ... 28 9 ... 17 13 ... 21 16 ... 28	19 43 124 0256 19 43 124 0257 19 43 124 0258 19 43 124 0296 19 43 124 0297 19 43 124 0298	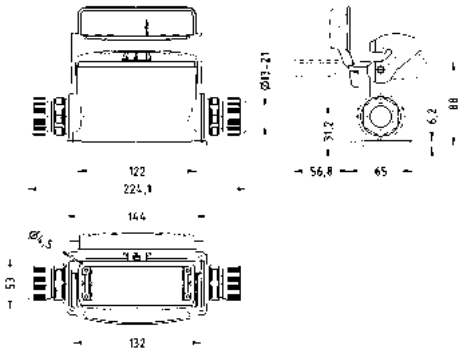

Identification	Cable entry	Clamping range (mm)	Part number	Drawing (dimensions in mm)
Han-Eco® B, Cable to cable housing, With integrated cable gland, Top entry 	1x M32 1x M40	13 ... 21 16 ... 28	19 43 124 0757 19 43 124 0758	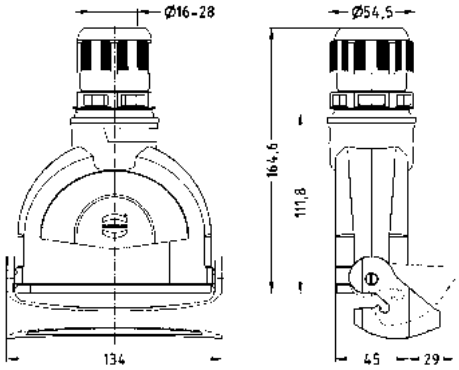
Han-Eco® B, Protection cover, for hoods			19 43 024 5442	
Han-Eco® B, Protection cover, for bulkhead mounted housings, for surface mounted housings			19 43 024 5410	
Han-Eco® B, Protection cover, for cable to cable housing			19 43 024 5446	

Han-Eco® B for outdoor applications

Features

- Suitable for standard inserts and modules from the Han-Modular® portfolio
- With integrated cable gland
- Suitable for applications according to protection class II
- Minimal weight with excellent mechanical robustness

Technical characteristics

Limiting temperature	-40 ... +125 °C
Degree of protection acc. to IEC 60529	IP65
Material (hood/housing)	Polyamide, Fibre-glass reinforced
Colour (hood/housing)	RAL 9005 (jet black)
Material (seal)	FPM
Colour (seal)	RAL 7001 (silver-grey)
Material (locking)	Polyamide, Fibre-glass reinforced
Colour (locking)	RAL 9005 (jet black)
Material flammability class acc. to UL 94	V-0
Material flammability class acc. to UL 94 (locking levers)	V-0

Specifications and approvals

IEC 61984
EN 45545-2
R22: HL1, HL2, HL3
R23: HL1, HL2, HL3
R24: HL1, HL2, HL3

Details

Mating compatible with all metal hoods and housings of the series Han® B.

As an option a larger panel cut out for the rear assembly of the bulkhead mounted housings is possible.

Available as from October 2018

Single locking lever

Identification	Cable entry	Clamping range (mm)	Part number	Drawing (dimensions in mm)
Han-Eco® B, Hoods, With integrated cable gland, Top entry 	1x M20 1x M25 1x M32	6 ... 13 9 ... 17 13 ... 21	19 43 106 0445 19 43 106 0446 19 43 106 0447	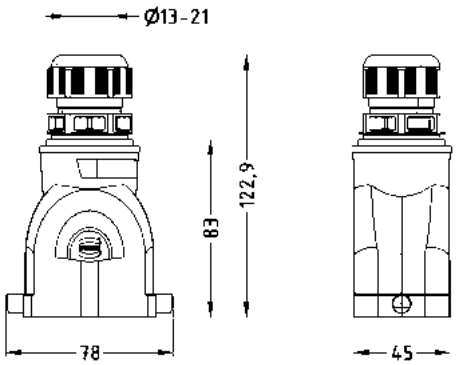
Han-Eco® B, Hoods, With integrated cable gland, Side entry 	1x M20 1x M25 1x M32	6 ... 13 9 ... 17 13 ... 21	19 43 106 0545 19 43 106 0546 19 43 106 0547	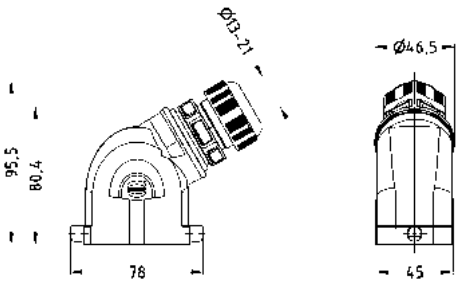
Han-Eco® B, Bulkhead mounted housings 			19 43 206 0340	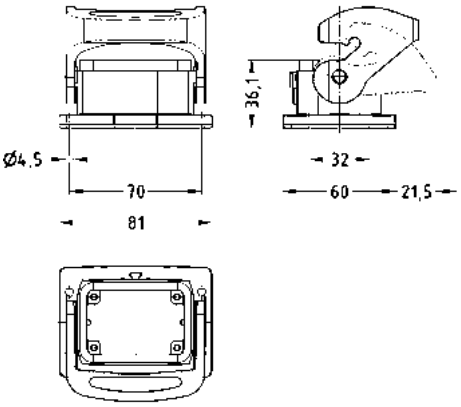

Han-Eco® B for outdoor applications

Size 6 B

Identification	Cable entry	Clamping range (mm)	Part number	Drawing (dimensions in mm)
Han-Eco® B, Bulkhead mounted housings, With thermo-plastic cover 			19 43 206 0341	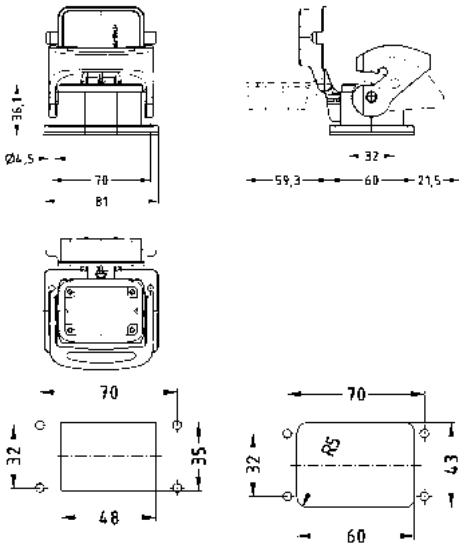 Panel cut out Front mounting / Rear mounting
Han-Eco® B, Surface mounted housing, With integrated cable gland, Side entry 	1x M20 1x M25 1x M32 2x M20 2x M25 2x M32	6 ... 13 9 ... 17 13 ... 21 6 ... 13 9 ... 17 13 ... 21	19 43 306 0250 19 43 306 0251 19 43 306 0252 19 43 306 0290 19 43 306 0291 19 43 306 0292	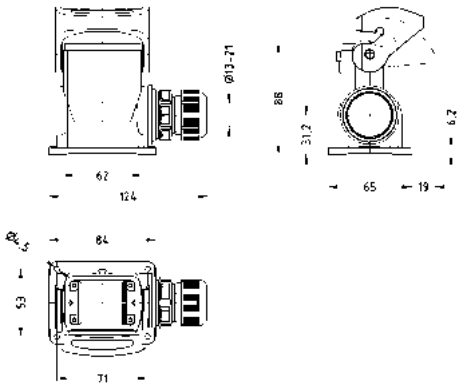
Han-Eco® B, Surface mounted housing, With thermo-plastic cover, With integrated cable gland, Side entry 	1x M20 1x M25 1x M32 2x M20 2x M25 2x M32	6 ... 13 9 ... 17 13 ... 21 6 ... 13 9 ... 17 13 ... 21	19 43 306 0255 19 43 306 0256 19 43 306 0257 19 43 306 0295 19 43 306 0296 19 43 306 0297	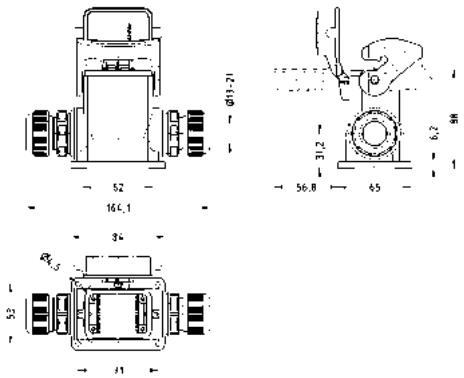

Identification	Cable entry	Clamping range (mm)	Part number	Drawing (dimensions in mm)
Han-Eco® B, Cable to cable housing, With integrated cable gland, Top entry 	1x M20 1x M25 1x M32	6 ... 13 9 ... 17 13 ... 21	19 43 306 0755 19 43 306 0756 19 43 306 0757	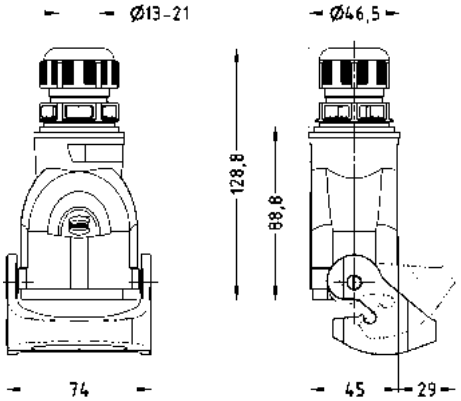
Han-Eco® B, Protection cover, for hoods			19 43 206 5442	
Han-Eco® B, Protection cover, for bulkhead mounted housings, for surface mounted housings			19 43 006 5410	
Han-Eco® B, Protection cover, for cable to cable housing			19 43 006 5446	

Double locking lever

Identification	Cable entry	Clamping range (mm)	Part number	Drawing (dimensions in mm)
Han-Eco® B, Hoods, With integrated cable gland, Top entry 	1x M20 1x M25 1x M32	6 ... 13 9 ... 17 13 ... 21	19 43 110 0425 19 43 110 0426 19 43 110 0427	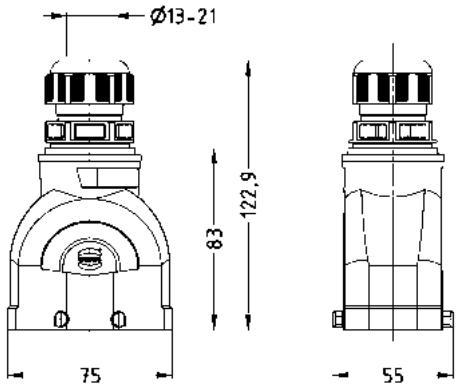
Han-Eco® B, Hoods, With integrated cable gland, Side entry 	1x M20 1x M25 1x M32	6 ... 13 9 ... 17 13 ... 21	19 43 110 0525 19 43 110 0526 19 43 110 0527	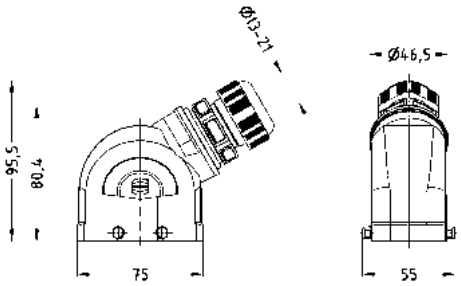
Han-Eco® B, Bulkhead mounted housings 			19 43 210 0320	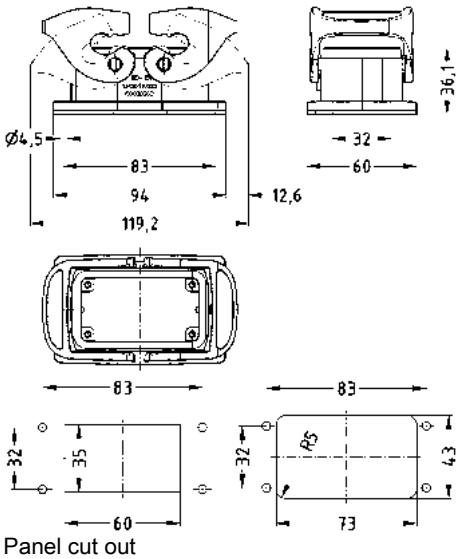 Panel cut out Front mounting / Rear mounting

Han-Eco® B for outdoor applications — Size 10 B

Identification	Cable entry	Clamping range (mm)	Part number	Drawing (dimensions in mm)
Han-Eco® B, Surface mounted housing, With integrated cable gland, Side entry 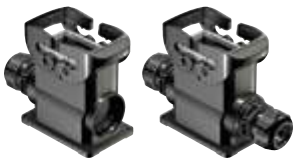	1x M20 1x M25 1x M32 1x M40 2x M20 2x M25 2x M32	6 ... 13 9 ... 17 13 ... 21 16 ... 28 6 ... 13 9 ... 17 13 ... 21	19 43 310 0230 19 43 310 0231 19 43 310 0232 19 43 310 0233 19 43 310 0270 19 43 310 0271 19 43 310 0272	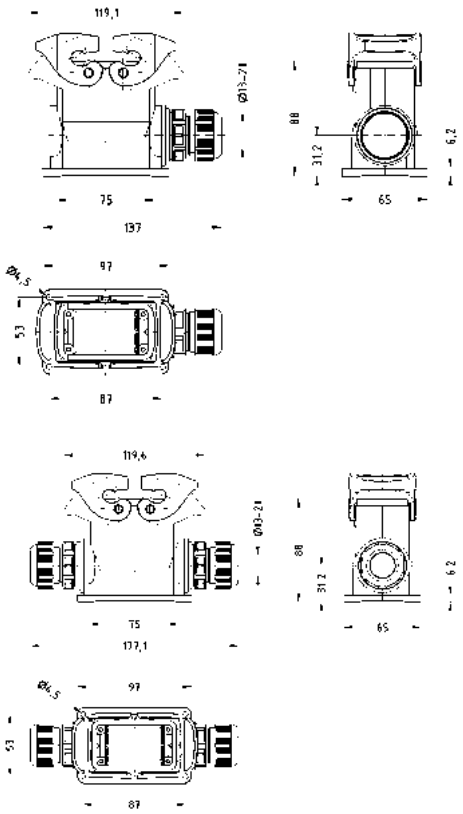
Han-Eco® B, Cable to cable housing, With integrated cable gland, Top entry 	1x M20 1x M25 1x M32	6 ... 13 9 ... 17 13 ... 21	19 43 310 0735 19 43 310 0736 19 43 310 0737	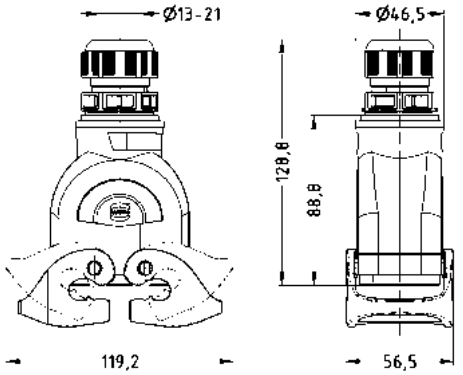
Han-Eco® B, Protection cover, for hoods			19 43 210 5422	

Double locking lever (on the hood)

Identification	Cable entry	Clamping range (mm)	Part number	Drawing (dimensions in mm)
Han-Eco® B, Hoods, With integrated cable gland, Top entry 	1x M32	13 ... 21	19 43 110 0437	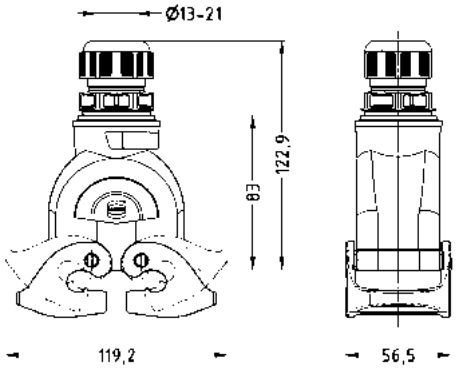
Han-Eco® B, Hoods, With integrated cable gland, Side entry	1x M32	13 ... 21	19 43 110 0537	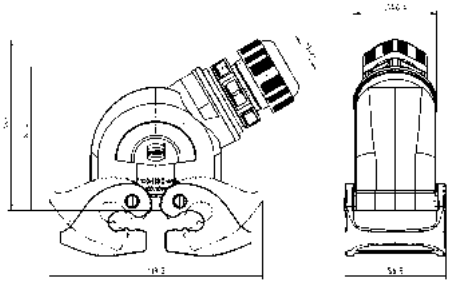
Han-Eco® B, Bulkhead mounted housings, With thermo-plastic cover 			19 43 210 0322	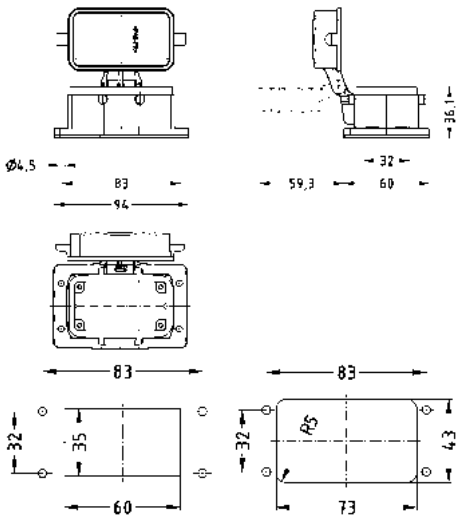 Panel cut out Front mounting / Rear mounting

Identification	Cable entry	Clamping range (mm)	Part number	Drawing (dimensions in mm)
Han-Eco® B, Surface mounted housing, With thermo-plastic cover, With integrated cable gland, Side entry 	1x M32 2x M32	13 ... 21 13 ... 21	19 43 310 0227 19 43 310 0267	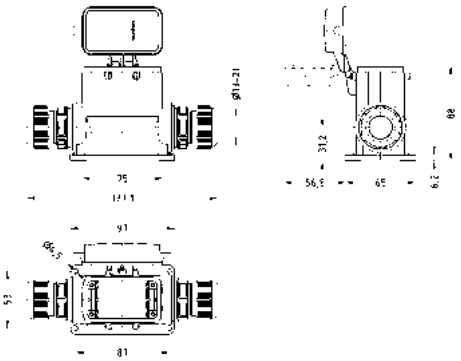

Single locking lever

Identification	Cable entry	Clamping range (mm)	Part number	Drawing (dimensions in mm)
Han-Eco® B, Hoods, With integrated cable gland, Side entry 	1x M20 1x M25 1x M32	6 ... 13 9 ... 17 13 ... 21	19 43 110 0545 19 43 110 0546 19 43 110 0547	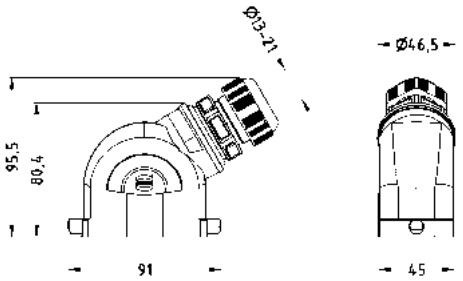
Han-Eco® B, Bulkhead mounted housings 			19 43 210 0340	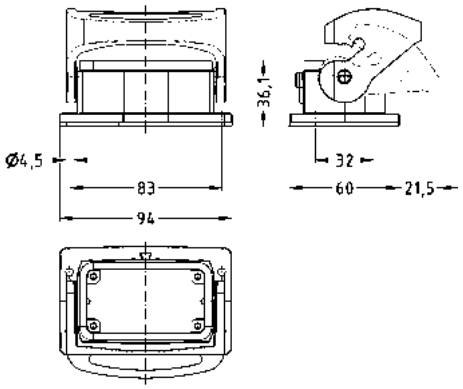
Han-Eco® B, Bulkhead mounted housings, With thermo-plastic cover 			19 43 210 0341	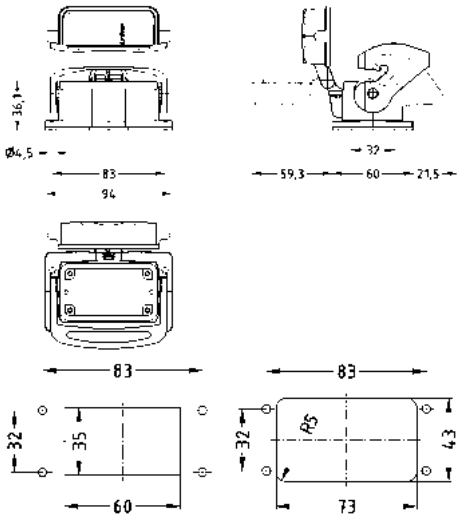 Panel cut out Front mounting / Rear mounting

Han-Eco® B for outdoor applications — Size 10 B

Identification	Cable entry	Clamping range (mm)	Part number	Drawing (dimensions in mm)
Han-Eco® B, Surface mounted housing, With integrated cable gland, Side entry 	1x M20 1x M25 1x M32 2x M20 2x M25 2x M32	6 ... 13 9 ... 17 13 ... 21 6 ... 13 9 ... 17 13 ... 21	19 43 310 0250 19 43 310 0251 19 43 310 0252 19 43 310 0290 19 43 310 0291 19 43 310 0292	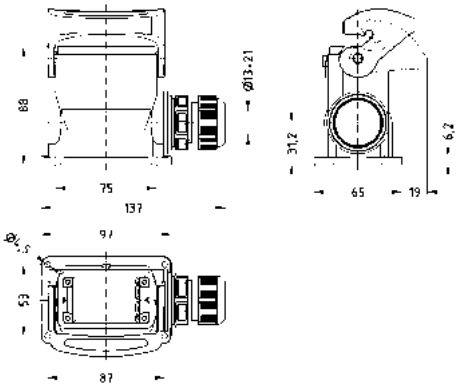
Han-Eco® B, Surface mounted housing, With thermo-plastic cover, With integrated cable gland, Side entry 	1x M20 1x M25 1x M32 2x M20 2x M25 2x M32	6 ... 13 9 ... 17 13 ... 21 6 ... 13 9 ... 17 13 ... 21	19 43 310 0255 19 43 310 0256 19 43 310 0257 19 43 310 0295 19 43 310 0296 19 43 310 0297	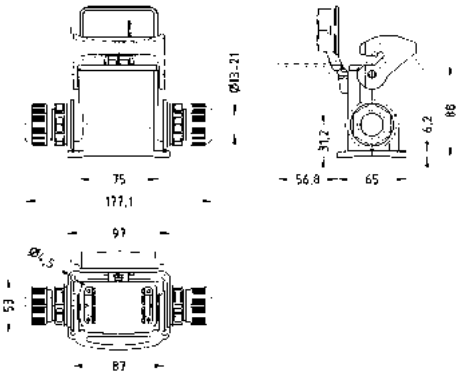
Han-Eco® B, Cable to cable housing, With integrated cable gland, Top entry 	1x M20 1x M25 1x M32	6 ... 13 9 ... 17 13 ... 21	19 43 310 0755 19 43 310 0756 19 43 310 0757	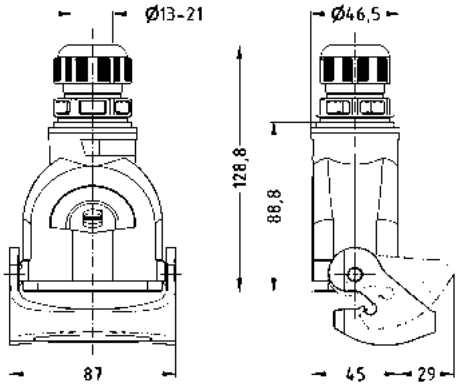
Han-Eco® B, Protection cover, for hoods			19 43 210 5442	

Double locking lever

Identification	Cable entry	Clamping range (mm)	Part number	Drawing (dimensions in mm)
Han-Eco® B, Hoods, With integrated cable gland, Top entry 	1x M25 1x M32 1x M40	9 ... 17 13 ... 21 16 ... 28	19 43 116 0426 19 43 116 0427 19 43 116 0428	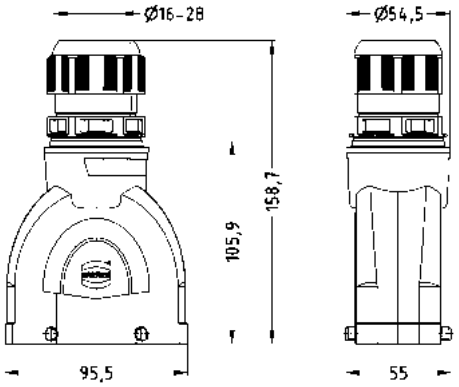
Han-Eco® B, Hoods, With integrated cable gland, Side entry 	1x M25 1x M32 1x M40	9 ... 17 13 ... 21 16 ... 28	19 43 116 0526 19 43 116 0527 19 43 116 0528	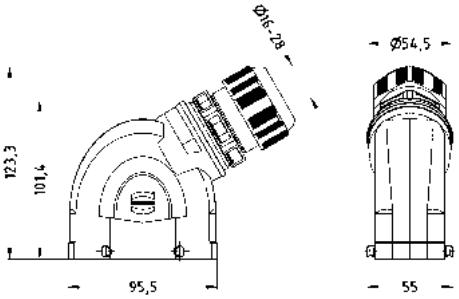
Han-Eco® B, Bulkhead mounted housings 			19 43 216 0320	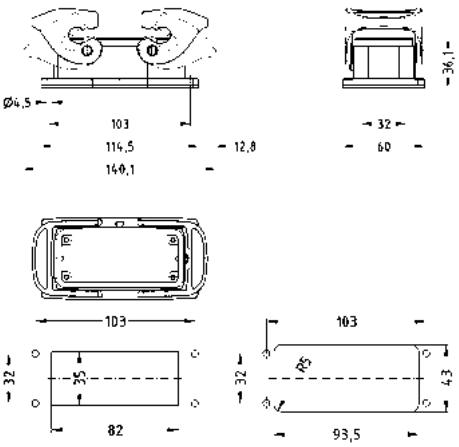 Panel cut out Front mounting / Rear mounting

Han-Eco® B for outdoor applications

Size 16 B

Identification	Cable entry	Clamping range (mm)	Part number	Drawing (dimensions in mm)
Han-Eco® B, Surface mounted housing, With integrated cable gland, Side entry 	1x M25 1x M32 1x M40 2x M25 2x M32 2x M40	9 ... 17 13 ... 21 16 ... 28 9 ... 17 13 ... 21 16 ... 28	19 43 316 0231 19 43 316 0232 19 43 316 0233 19 43 316 0271 19 43 316 0272 19 43 316 0273	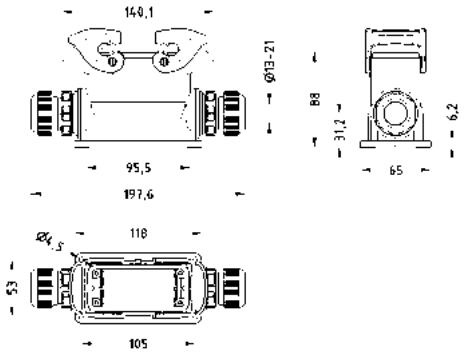
Han-Eco® B, Cable to cable housing, With integrated cable gland, Top entry 	1x M25 1x M32 1x M40	9 ... 17 13 ... 21 16 ... 28	19 43 316 0736 19 43 316 0737 19 43 316 0738	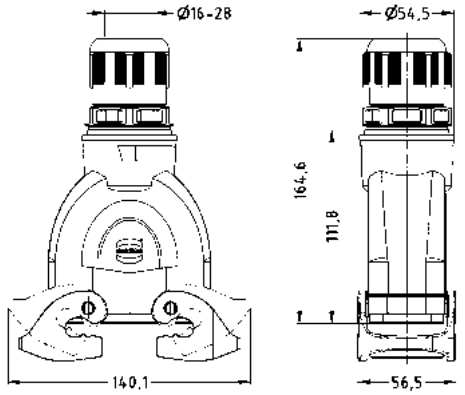
Han-Eco® B, Protection cover, for hoods			19 43 216 5422	

Double locking lever (on the hood)

Identification	Cable entry	Clamping range (mm)	Part number	Drawing (dimensions in mm)
Han-Eco® B, Hoods, With integrated cable gland, Top entry 	1x M40	16 ... 28	19 43 116 0438	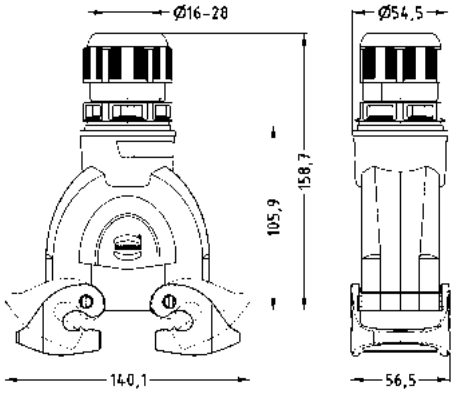
Han-Eco® B, Hoods, With integrated cable gland, Side entry	1x M40	16 ... 28	19 43 116 0538	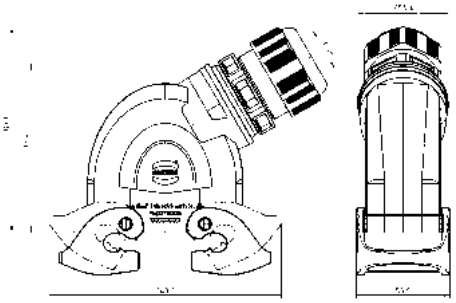
Han-Eco® B, Bulkhead mounted housings, With thermo-plastic cover 			19 43 216 0322	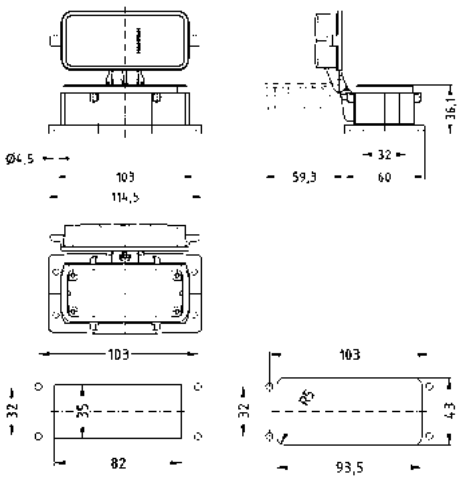 Panel cut out Front mounting / Rear mounting

Han-Eco® B for outdoor applications

Size 16 B

Identification	Cable entry	Clamping range (mm)	Part number	Drawing (dimensions in mm)
Han-Eco® B, Surface mounted housing, With thermo-plastic cover, With integrated cable gland, Side entry 	1x M40 2x M40	16 ... 28 16 ... 28	19 43 316 0228 19 43 316 0268	

Single locking lever

Identification	Cable entry	Clamping range (mm)	Part number	Drawing (dimensions in mm)
Han-Eco® B, Hoods, With integrated cable gland, Top entry 	1x M25 1x M32 1x M40	9 ... 17 13 ... 21 16 ... 28	19 43 116 0446 19 43 116 0447 19 43 116 0448	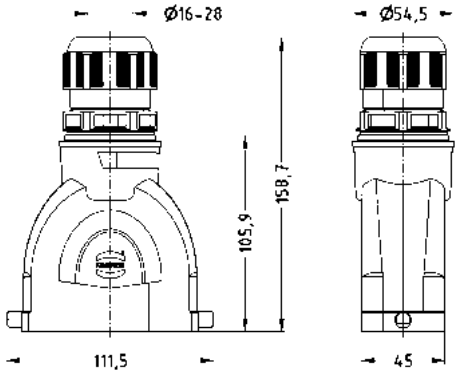
Han-Eco® B, Hoods, With integrated cable gland, Side entry 	1x M25 1x M32 1x M40	9 ... 17 13 ... 21 16 ... 28	19 43 116 0546 19 43 116 0547 19 43 116 0548	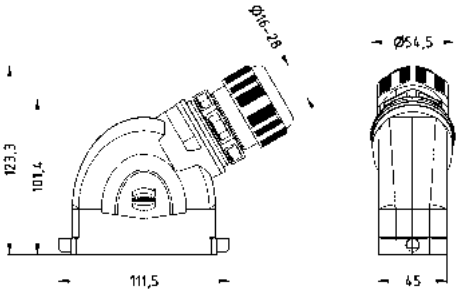
Han-Eco® B, Bulkhead mounted housings 			19 43 216 0340	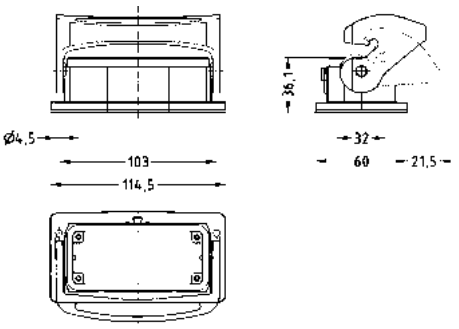

Han-Eco® B for outdoor applications — Size 16 B

Identification	Cable entry	Clamping range (mm)	Part number	Drawing (dimensions in mm)
Han-Eco® B, Bulkhead mounted housings, With thermo-plastic cover 			19 43 216 0341	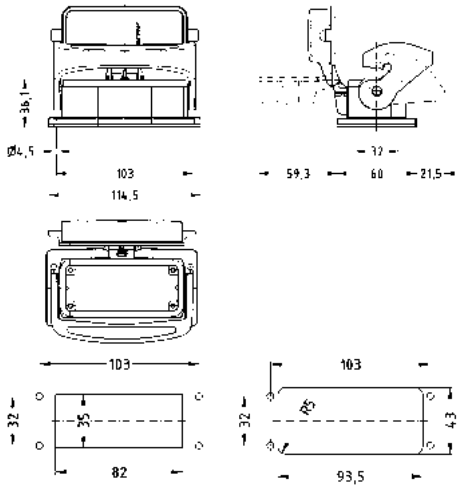 Panel cut out Front mounting / Rear mounting
Han-Eco® B, Surface mounted housing, With integrated cable gland, Side entry 	1x M25 1x M32 1x M40 2x M25 2x M32 2x M40	9 ... 17 13 ... 21 16 ... 28 9 ... 17 13 ... 21 16 ... 28	19 43 316 0251 19 43 316 0252 19 43 316 0253 19 43 316 0291 19 43 316 0292 19 43 316 0293	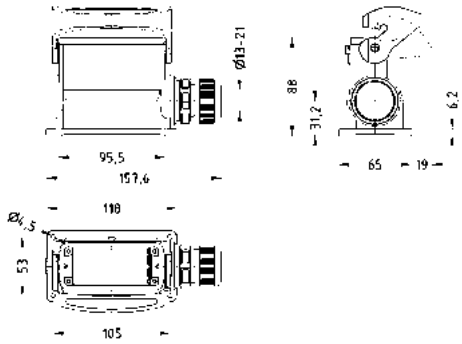
Han-Eco® B, Surface mounted housing, With thermo-plastic cover, With integrated cable gland, Side entry 	1x M25 1x M32 1x M40 2x M25 2x M32 2x M40	9 ... 17 13 ... 21 16 ... 28 9 ... 17 13 ... 21 16 ... 28	19 43 316 0256 19 43 316 0257 19 43 316 0258 19 43 316 0296 19 43 316 0297 19 43 316 0298	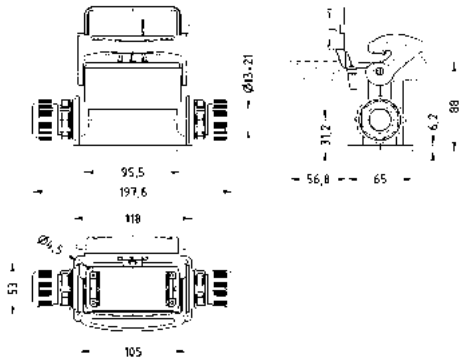

Identification	Cable entry	Clamping range (mm)	Part number	Drawing (dimensions in mm)
Han-Eco® B, Cable to cable housing, With integrated cable gland, Top entry 	1x M25 1x M32 1x M40	9 ... 17 13 ... 21 16 ... 28	19 43 316 0756 19 43 316 0757 19 43 316 0758	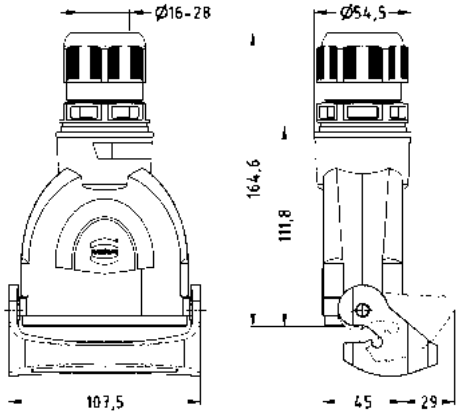
Han-Eco® B, Protection cover, for hoods			19 43 216 5442	

Double locking lever

Identification	Cable entry	Clamping range (mm)	Part number	Drawing (dimensions in mm)
Han-Eco® B, Hoods, With integrated cable gland, Top entry 	1x M32 1x M40	13 ... 21 16 ... 28	19 43 124 0427 19 43 124 0428	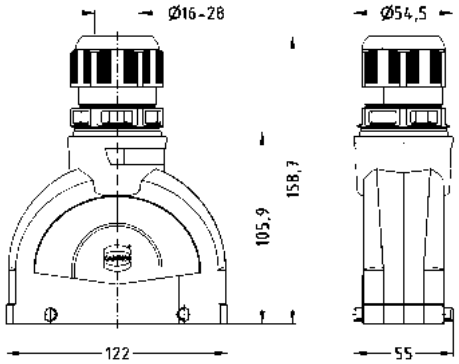
Han-Eco® B, Hoods, With integrated cable gland, Side entry 	1x M32 1x M40	13 ... 21 16 ... 28	19 43 124 0527 19 43 124 0528	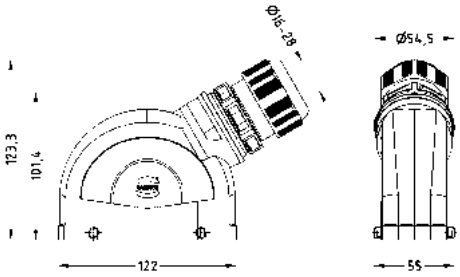
Han-Eco® B, Bulkhead mounted housings 			19 43 224 0320	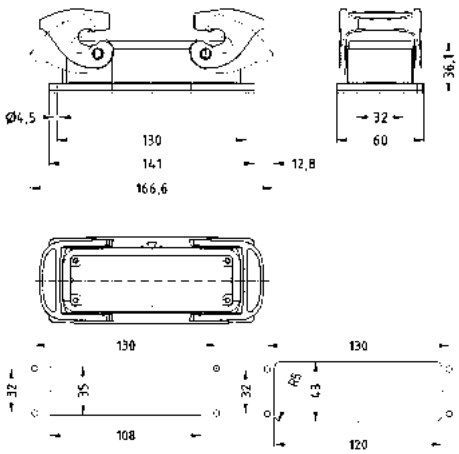 Panel cut out Front mounting / Rear mounting

Identification	Cable entry	Clamping range (mm)	Part number	Drawing (dimensions in mm)
Han-Eco® B, Surface mounted housing, With integrated cable gland, Side entry 	1x M25 1x M32 1x M40 2x M25 2x M32 2x M40	9 ... 17 13 ... 21 16 ... 28 9 ... 17 13 ... 21 16 ... 28	19 43 324 0231 19 43 324 0232 19 43 324 0233 19 43 324 0271 19 43 324 0272 19 43 324 0273	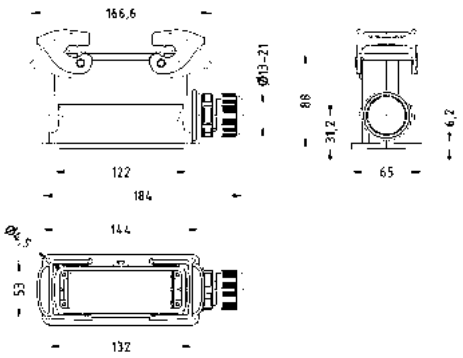
Han-Eco® B, Cable to cable housing, With integrated cable gland, Top entry 	1x M32 1x M40	13 ... 21 16 ... 28	19 43 324 0737 19 43 324 0738	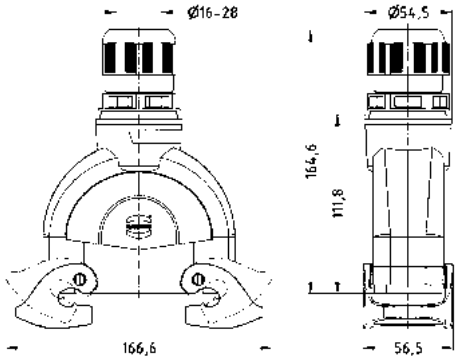
Han-Eco® B, Protection cover, for hoods			19 43 224 5422	

Double locking lever (on the hood)

Identification	Cable entry	Clamping range (mm)	Part number	Drawing (dimensions in mm)
Han-Eco® B, Hoods, With integrated cable gland, Top entry 	1x M40	16 ... 28	19 43 124 0438	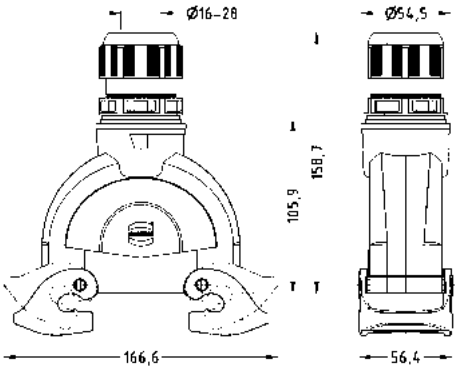
Han-Eco® B, Hoods, With integrated cable gland, Side entry	1x M40	16 ... 28	19 43 124 0538	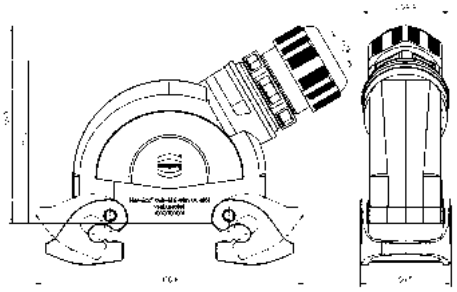
Han-Eco® B, Bulkhead mounted housings, With thermo-plastic cover 			19 43 224 0322	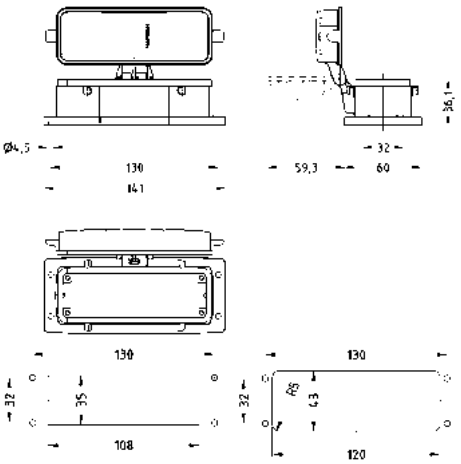 Panel cut out Front mounting / Rear mounting

Identification	Cable entry	Clamping range (mm)	Part number	Drawing (dimensions in mm)
Han-Eco® B, Surface mounted housing, With thermo-plastic cover, With integrated cable gland, Side entry 	1x M32 1x M40 2x M32 2x M40	13 ... 21 16 ... 28 13 ... 21 16 ... 28	19 43 324 0227 19 43 324 0228 19 43 324 0267 19 43 324 0268	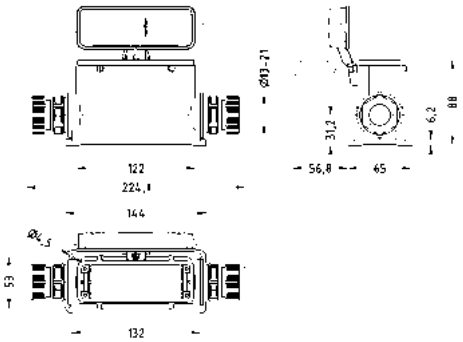

Single locking lever

Identification	Cable entry	Clamping range (mm)	Part number	Drawing (dimensions in mm)
Han-Eco® B, Hoods, With integrated cable gland, Top entry 	1x M32 1x M40	13 ... 21 16 ... 28	19 43 124 0447 19 43 124 0448	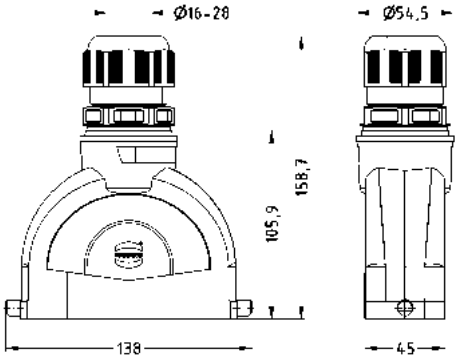
Han-Eco® B, Hoods, With integrated cable gland, Side entry 	1x M32 1x M40	13 ... 21 16 ... 28	19 43 124 0547 19 43 124 0548	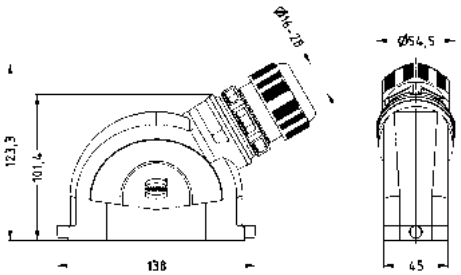
Han-Eco® B, Bulkhead mounted housings 			19 43 224 0340	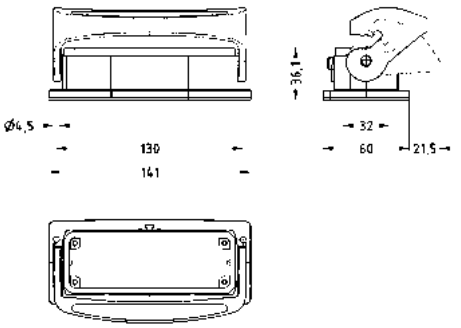

Identification	Cable entry	Clamping range (mm)	Part number	Drawing (dimensions in mm)
Han-Eco® B, Bulkhead mounted housings, With thermo-plastic cover 			19 43 224 0341	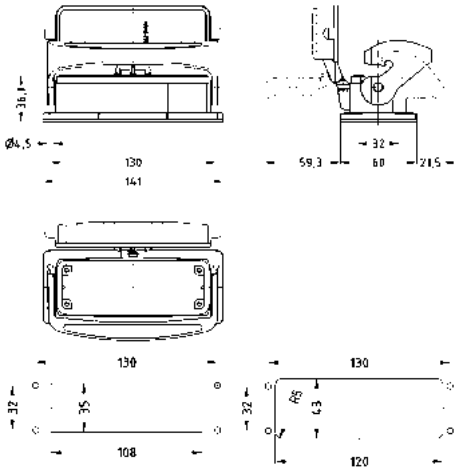 Panel cut out Front mounting / Rear mounting
Han-Eco® B, Surface mounted housing, With integrated cable gland, Side entry 	1x M25 1x M32 1x M40 2x M25 2x M32 2x M40	9 ... 17 13 ... 21 16 ... 28 9 ... 17 13 ... 21 16 ... 28	19 43 324 0251 19 43 324 0252 19 43 324 0253 19 43 324 0291 19 43 324 0292 19 43 324 0293	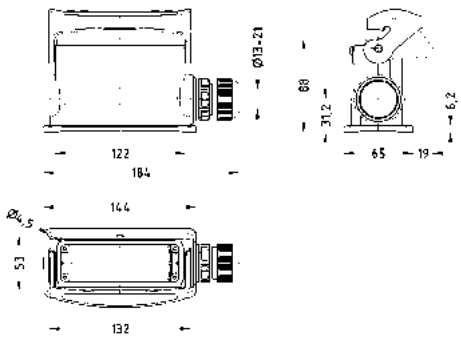
Han-Eco® B, Surface mounted housing, With thermo-plastic cover, With integrated cable gland, Side entry 	1x M25 1x M32 1x M40 2x M25 2x M32 2x M40	9 ... 17 13 ... 21 16 ... 28 9 ... 17 13 ... 21 16 ... 28	19 43 324 0256 19 43 324 0257 19 43 324 0258 19 43 324 0296 19 43 324 0297 19 43 324 0298	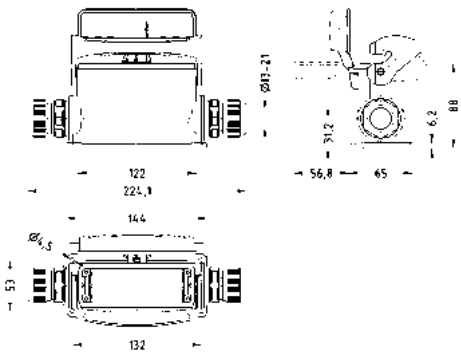

Identification	Cable entry	Clamping range (mm)	Part number	Drawing (dimensions in mm)
Han-Eco® B, Cable to cable housing, With integrated cable gland, Top entry 	1x M32 1x M40	13 ... 21 16 ... 28	19 43 324 0757 19 43 324 0758	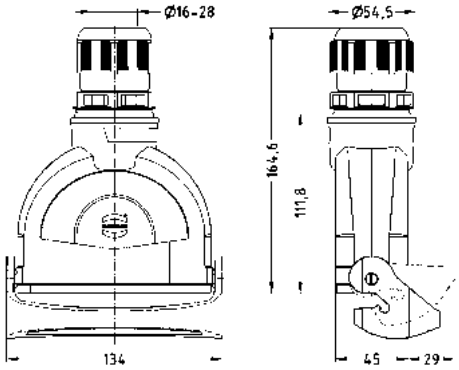
Han-Eco® B, Protection cover, for hoods			19 43 224 5442	

Number of contacts

1

Technical characteristics

Number of contacts	1
Limiting temperature	-40 ... +125 °C
Mating cycles	≥500
Colour (insert)	RAL 7032 (pebble grey)
Material (accessories)	Brass, zinc plated
RoHS	compliant with exemption
RoHS exemptions	**6a:** Lead as an alloying element in steel for machining purposes and in galvanised steel containing up to 0,35 % lead by weight, **6c:** Copper alloy containing up to 4 % lead by weight

Specifications and approvals

UL 1977 ECBT2.E235076
IEC 61984

Identification	Conductor cross-section (mm²)	Part number Male	Part number Female	Drawing (dimensions in mm)
Han-Eco® Modular, Contact module, Screw termination  With 09 99 000 0830 HARTING Crimping tool also cable up to 25 mm² with ferrule adaptable Not for Han-Modular® hinged frames!	1,5 ... 16	19 41 001 2600	19 41 001 2700	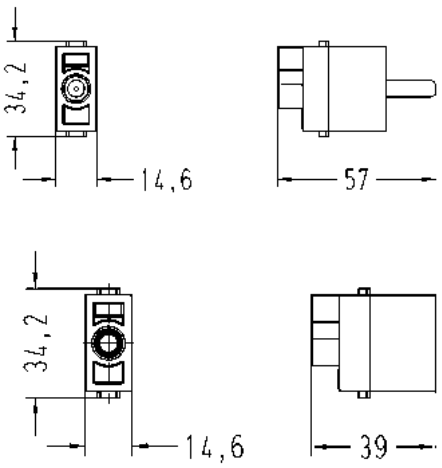
Han-Eco® Modular, PE Multiple ground connection, Up to 8 contacts 	0,5 ... 6 with cable shoe M4 (total max. 25 mm²)	19 41 000 9999	19 41 000 9999	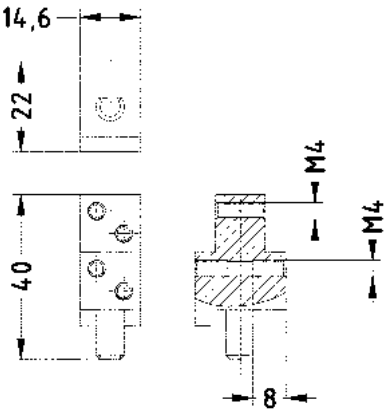

Technical characteristics

Limiting temperature	-20 ... +100 °C
Material (cable glands)	Polyamide

Technical characteristics

Colour (accessories)	RAL 9005 (jet black)
RoHS	compliant

Identification	Size	Clamping range (mm)	Part number	Drawing (dimensions in mm)
Han-Eco® , Cable gland 	M20 M25 M32 M40	6 ... 13 9 ... 17 13 ... 21 16 ... 28	19 41 000 5111 19 41 000 5121 19 41 000 5131 19 41 000 5141	Tightening torque Fitting / Cap nut M20: 4 Nm / 3 Nm M25: 10 Nm / 4 Nm M32: 15 Nm / 4 Nm M40: 20 Nm / 20 Nm 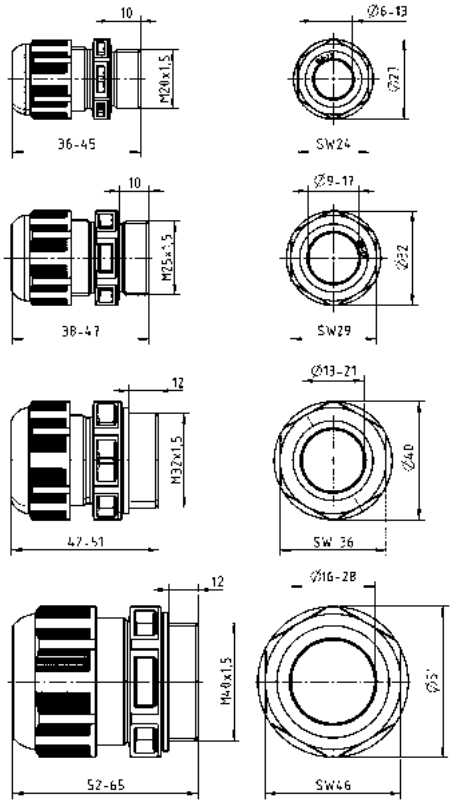

Identification	Size	Clamping range (mm)	Part number	Drawing (dimensions in mm)
Han-Eco® , Reduction seal insert 	M32 M40	9 ... 14 12 ... 20	19 41 000 5132 19 41 000 5142	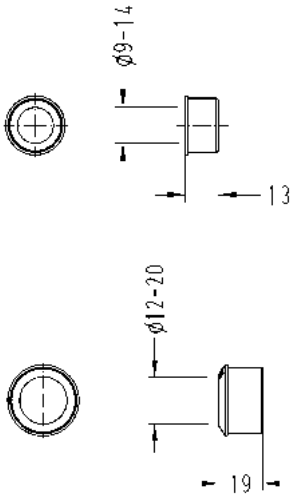

Technical characteristics

Material (seal)	NBR

Technical characteristics

Colour (seal)	Black
RoHS	compliant

Identification	Size	Part number	Drawing (dimensions in mm)
Han-Eco® Modular, Flange gasket, Han-Eco® 	06 B 10 B 16 B 24 B	19 41 000 9801 19 41 000 9802 19 41 000 9803 19 41 000 9804	
Han-Eco® Modular, Profile gasket, Han-Eco® 	06 B 10 B 16 B 24 B	19 41 000 9901 19 41 000 9902 19 41 000 9903 19 41 000 9904	

Han® Hoods and Housings

Contents	Page
Hoods/Housings, metal Han® 3 A	**31.4**
Hoods/Housings, thermoplastic Han® 3 A	**31.11**
Standard hoods/housings Han® 10 ... 32 A	**31.17**
Standard hoods/housings Han® B	**31.28**
Han® Easy Hood hoods/housings	**31.81**
Han-Drive® hoods/housings	**31.85**
Han® 3 M hoods/housings	**31.88**
Han® M hoods/housings	**31.93**
Han® 3 EMC hoods/housings	**31.106**
Han® EMC hoods/housings	**31.110**
Han® EMC/B hoods/housings	**31.117**
Han® 3 HPR hoods/housings	**31.127**
Han® HPR hoods/housings	**31.142**
Han-INOX® hoods/housings	**31.164**

Types of hood/housing

Han® 3 A Standard Hoods/Housings
Metal hoods/housings for industrial applications

Material	zinc die-cast
Colour	RAL 7037 (grey)
Surface	powder-coated
Locking element	steel, zinc-plated
Lever type	lever, metal
Hoods/Housings seal	NBR
Limiting temperatures	-40 °C ... +125 °C
Flammability acc. to UL 94	V 0
Degree of protection acc. to DIN EN 60 529 for coupled connector	IP44 IP67 is achieved with seal screw 09 20 000 9918

Han® 3 A Hoods/Housings
Plastic hoods/housings for industrial applications

Material	polycarbonate
Colour	RAL 7032 (light grey) / RAL 9005 (black)
Locking element	polyamide
Lever type	lever, plastic
Hoods/Housings seal	NBR
Limiting temperatures	-40 °C ... +125 °C
Approval acc. to UL 50	NEMA Type 4/4X/12
Flammability acc. to UL 94	V 0
Degree of protection acc. to DIN EN 60 529 for coupled connector	IP44 IP67 is achieved with seal screw 09 20 000 9918

Han® Standard Hoods/Housings
Metal hoods/housings for industrial applications

Material	aluminium die-cast
Colour	RAL 7037 (grey)
Surface	powder-coated
Locking element	stainless steel
Lever type	Han-Easy Lock®
Hoods/Housings seal	NBR
Limiting temperatures	-40 °C ... +125 °C
Approval acc. to UL 50	NEMA Type 4/4X/12
Degree of protection acc. to DIN EN 60 529 for coupled connector	IP65

Han-Drive® Housings for motor applications

Material	aluminium die-cast
Colour	non coloured / RAL 7037 (grey)
Surface	electrical conductive / powder-coated / unpainted
Locking element	stainless steel
Lever type	Han-Easy Lock®
Hoods/Housings seal	NBR
Limiting temperatures	-40 °C ... +125 °C
Approval acc. to UL 50	NEMA Type 4/4X/12
Degree of protection acc. to DIN EN 60 529 for coupled connector	IP65

Han® 3 M Hoods/Housings
Hoods/Housings for higher environmental requirements

Material	zinc die-cast
Colour	RAL 9005 (black)
Surface - Top coat	epoxy powder paint
Locking element	stainless steel
Lever type	lever, metal
Hoods/Housings seal	FPM
Limiting temperatures	-40 °C ... +125 °C
Corrosion resistance	ASTM B117-09 (500 h)
Degree of protection acc. to DIN EN 60 529 for coupled connector	IP44 IP67 is achieved with seal screw 09 20 000 9918

Han® M Hoods/Housings
Hoods/Housings for higher environmental requirements

Material	aluminium die-cast
Colour	RAL 9005 (black)
Surface - Top coat	epoxy powder paint
Locking element	stainless steel
Lever type	lever, metal
Hoods/Housings seal	FPM
Limiting temperatures	-40 °C ... +125 °C
Approval acc. to UL 50	NEMA Type 4/4X/12
Corrosion resistance	ASTM B117-09 (500 h)
Degree of protection acc. to DIN EN 60 529 for coupled connector	IP65

Types of hood/housing

Han® 3 EMC Hoods/Housings
Hoods/Housings for higher EMC requirements

Material	zinc die-cast
Colour	non coloured
Surface	electrical conductive
Locking element	steel, zinc-plated
Lever type	lever, metal
Hoods/Housings seal	NBR
Limiting temperatures	-40 °C ... +125 °C
Degree of protection acc. to DIN EN 60 529 for coupled connector	IP44 IP67 is achieved with seal screw 09 20 000 9918

Han® EMC Hoods/Housings
Hoods/Housings for higher EMC requirements

Material	aluminium die-cast
Colour	non coloured
Surface	electrical conductive
Locking element	
- Screw locking	M5
- Material	stainless steel
- Tightening torque	3 Nm
Hoods/Housings seal	NBR
Limiting temperatures	-40 °C ... +125 °C
Approval acc. to UL 50	NEMA Type 4/4X/12
Degree of protection acc. to DIN EN 60 529 for coupled connector	IP65

Han® EMC/B Hoods/Housings
Hoods/Housings for higher EMC requirements

Material	
- Hoods/Housings	aluminium die-cast
- shielded frames	zinc die-cast alloy
Colour	non coloured
Surface	
- Hoods/Housings	electrical conductive
- shielded frames	electrical conductive
Locking element	stainless steel
Lever type	Han-Easy Lock®
Hoods/Housings seal	NBR
Limiting temperatures	-40 °C ... +125 °C
Approval acc. to UL 50	NEMA Type 4/4X/12
Degree of protection acc. to DIN EN 60 529 for coupled connector	IP65

Han-INOX® Hoods/Housings
for higher corrosion requirements

Material	stainless steel
Colour	non coloured
Surface	electrical conductive
Locking element	stainless steel
Lever type	lever, metal
Hoods/Housings seal	NBR
Limiting temperatures	-40 °C ... +125 °C
Degree of protection acc. to DIN EN 60 529 for coupled connector	IP65
- Size Han® 3 A	IP44 IP67 is achieved with seal screw 09 20 000 9918

Han® 3 HPR Hoods/Housings
Hoods/Housings for harsh environmental requirements

Material	zinc die-cast
Colour	RAL 9005 (black)
Surface	
- Top coat	epoxy powder paint / chromated
Locking element	
- Screw locking	M4
- Material	stainless steel
- Tightening torque	2 Nm
Hoods/Housings seal	NBR
Limiting temperatures	-40 °C ... +125 °C
Corrosion resistance	ASTM B117-09 (500 h)
Degree of protection acc. to DIN EN 60 529 for coupled connector	IP65 / IP68 / IP69K

Attention
If inserts of the series Han® Q and Han A® are used, the seal on the insert must be removed. The sealed screw of the insulation body must be replaced by the sealed screw of the hood.

For angled bulkhead or surface mounted housings with through holes in the mounting flange the user must make sure, that the fixing screws seal to the inner part of the housing.

Han® HPR Hoods/Housings
Hoods/Housings for harsh environmental requirements

Material	aluminium die-cast, corrosion resistant
Colour	RAL 9005 (black)
Surface	
- Top coat	epoxy powder paint
Locking element	
- Screw locking	M6
- Material	stainless steel
- Tightening torque	4 Nm
- Toggle locking	
- Material	stainless steel
Hoods/Housings seal	NBR
Limiting temperatures	-40 °C ... +125 °C
Approval acc. to UL 50	NEMA Type 4/4X/12
Corrosion resistance	ASTM B117-09 (500 h)
Degree of protection acc. to DIN EN 60 529 for coupled connector	IP65 / IP68 / IP69K

Hoods/Housings, metal Han® 3 A

Features

- Standard Hoods/housings for industrial applications
- Slim, space saving construction type

Technical characteristics

Limiting temperature	-40 ... +125 °C
Degree of protection acc. to IEC 60529	IP44, IP65 / IP67, with seal screw 09 20 000 9918
Material (hood/housing)	Zinc die-cast
Surface (hood/housing)	Powder-coated
Colour (hood/housing)	RAL 7037 (dust grey)
Material (seal)	NBR
Material (locking)	Steel
Surface (locking)	Zinc plated
RoHS	compliant with exemption, compliant
RoHS exemptions	**6c:** Copper alloy containing up to 4 % lead by weight, **6a:** Lead as an alloying element in steel for machining purposes and in galvanised steel containing up to 0,35 % lead by weight

Specifications and approvals

DNV GL

Standard Hoods/housings for industrial applications
Single locking lever

Identification	Cable entry	Cable diameter (mm)	Part number	Drawing (dimensions in mm)
Han A® , Hoods, With integrated cable gland, Top entry 	1x Integrated 1x Integrated	6 ... 12 11 ... 17	19 20 003 1421 19 20 003 1422	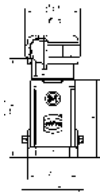
Han A® , Hoods, Top entry 	1x M20 1x M25		19 20 003 1440 19 20 003 1445	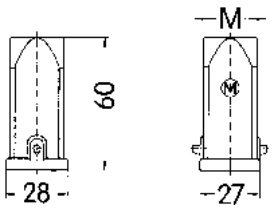
Han A® , Hoods, Side entry 	1x M20		19 20 003 1640	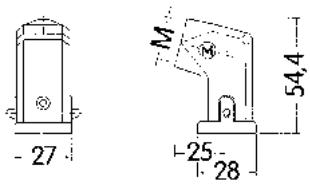
Han A® , Screw mounted housings 	1x M20		19 20 003 1150	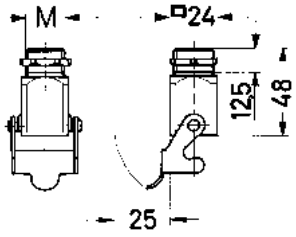

Hoods/Housings, metal Han® 3 A

Size 3 A

Identification	Cable entry	Cable diameter (mm)	Part number	Drawing (dimensions in mm)
Han A® , Screw mounted housings, Angled 	1x M20 1x M25		19 20 003 1160 19 20 003 1165	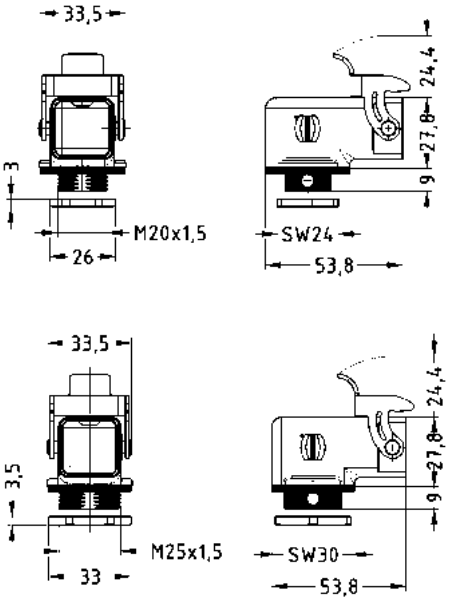
Han A® , Bulkhead mounted housings, Straight 			09 20 003 0301	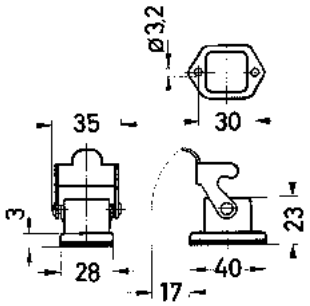 Panel cut out 22 x 22 mm
Han A® , Bulkhead mounted housings, Straight, With metal cover  for male inserts			09 20 003 0305	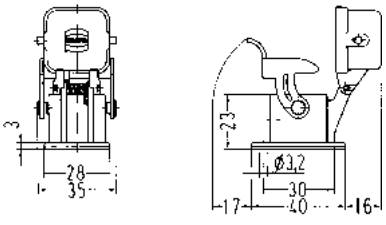 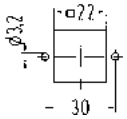 Panel cut out 22 x 22 mm

Identification	Cable entry	Cable diameter (mm)	Part number	Drawing (dimensions in mm)
Han A® , Bulkhead mounted housings, Straight, With metal cover, With seal  for female inserts			09 20 003 0306	
Han A® , Bulkhead mounted housings, Angled 			09 20 003 0801	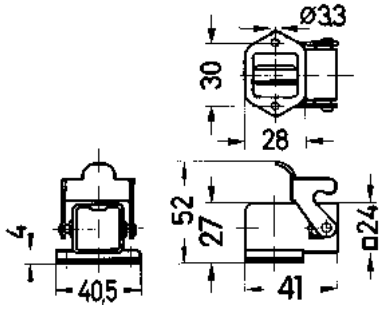 Panel cut out 22 x 22 mm
Han A® , Bulkhead mounted housings, Angled, 4 fixing screws 			09 20 003 0810	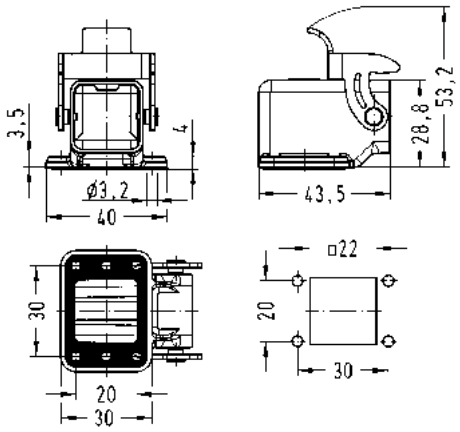
Han A® , Bulkhead mounted housings, Angled, 4 fixing screws, Square mounting flange 			09 20 003 0811	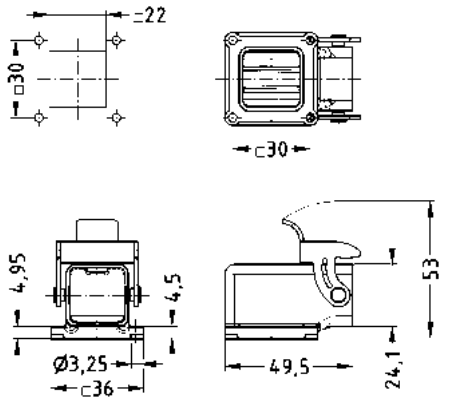

Hoods/Housings, metal Han® 3 A

Size 3 A

Identification	Cable entry	Cable diameter (mm)	Part number	Drawing (dimensions in mm)
Han A® , Surface mounted housing, Open bottom, Top entry 	1x M20		19 20 003 1250	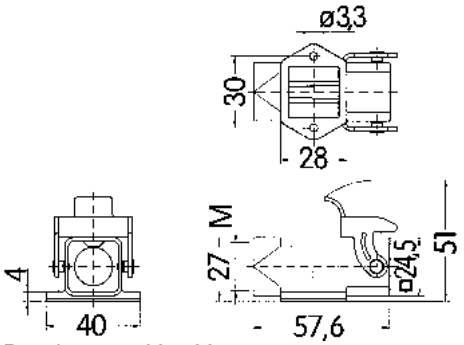 Panel cut out 22 x 22 mm
Han A® , Surface mounted housing, Bottom closed, Top entry 	1x M20		19 20 003 1252	
Han A® , Cable to cable housing, Top entry 	1x M20 1x M25		19 20 003 1750 19 20 003 1755	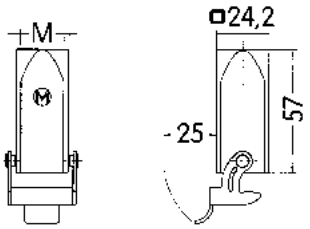
Han A® , Panel feed through housing, Top entry 	1x M20		19 20 003 1120	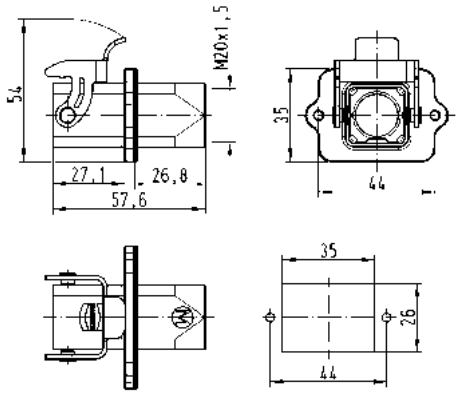 Panel cut out

Identification	Cable entry	Cable diameter (mm)	Part number	Drawing (dimensions in mm)
Han A® , Protection cover, for hoods, Metal, With fixing cord, With seal  for mounted female insert			09 20 003 5421	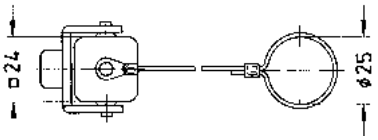
Han A® , Protection cover, for hoods, Metal, With fixing cord  for mounted male insert			09 20 003 5422	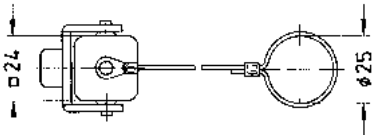
Han A® , Protection cover, for bulkhead mounted housings, for surface mounted housings, Metal, With fixing cord, With seal  for mounted female insert or for mounted Han-Brid® insert			09 20 003 5425	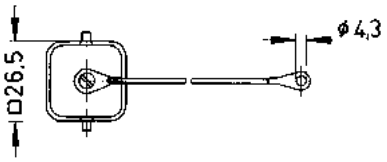
Han A® , Protection cover, for bulkhead mounted housings, for surface mounted housings, Metal, With fixing cord  for mounted male insert			09 20 003 5426	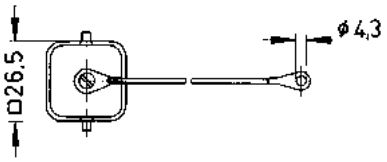
Han A® , Protection cover, for cable to cable housing, Metal, With fixing cord, With seal  for mounted female insert or for mounted Han-Brid® insert			09 20 003 5427	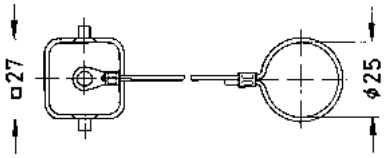

Identification	Cable entry	Cable diameter (mm)	Part number	Drawing (dimensions in mm)
Han A® , Protection cover, for cable to cable housing, Metal, With fixing cord 			09 20 003 5428	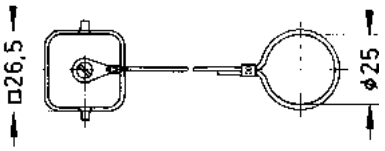

Hoods/Housings, thermoplastic Han® 3 A

Features

- Hoods/housings for industrial applications
- Slim, space saving construction type

Technical characteristics

Limiting temperature	-40 ... +125 °C
Degree of protection acc. to IEC 60529	IP44, IP67, with seal screw 09 20 000 9918
Type rating acc. to UL 50 / UL 50E	4, 4X, 12
Material (hood/housing)	Polycarbonate
Colour (hood/housing)	RAL 7032 (pebble grey), RAL 9005 (jet black)
Material (seal)	NBR
Material (locking)	Polyamide
Colour (locking)	RAL 7032 (pebble grey), RAL 9005 (jet black)
Material flammability class acc. to UL 94	V-0
Material flammability class acc. to UL 94 (locking levers)	V-0
RoHS	compliant

Specifications and approvals

UL 1977 ECBT2.E235076
CSA-C22.2 No. 182.3 ECBT8.E235076
DNV GL

Hoods/Housings, thermoplastic Han® 3 A

Size 3 A

Standard Hoods/housings for industrial applications
Single locking lever

Identification	Cable entry	Cable diameter (mm)	Part number	Drawing (dimensions in mm)
Han A® , Hoods, With integrated cable gland, Top entry, Grey 	1x Integrated 1x Integrated	7 ... 12 9 ... 17	19 20 003 0415 19 20 003 0410	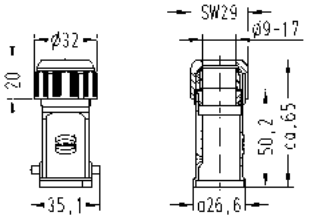
Han A® , Hoods, Top entry, Grey 	1x M20 1x M25		19 20 003 0420 19 20 003 0430	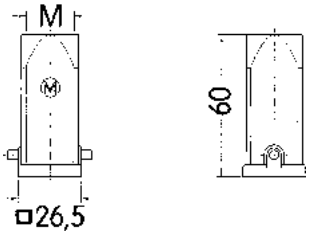
Han A® , Hoods, Top entry, Black 	1x M20 1x M25		19 20 003 0427 19 20 003 0437	
Han A® , Hoods, Side entry, Grey 	1x M20		19 20 003 0620	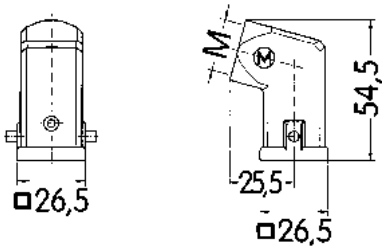
Han A® , Hoods, Side entry, Black	1x M20		19 20 003 0627	

Identification	Cable entry	Cable diameter (mm)	Part number	Drawing (dimensions in mm)
Han A® , Bulkhead mounted housings, Straight, Grey 			09 20 003 0320	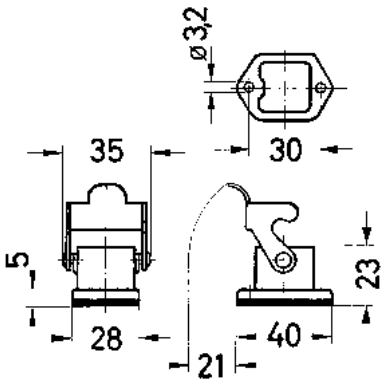 Panel cut out 22 x 22 mm
Han A® , Bulkhead mounted housings, Straight, Black			09 20 003 0327	
Han A® , Bulkhead mounted housings, Angled, Grey 			09 20 003 0820	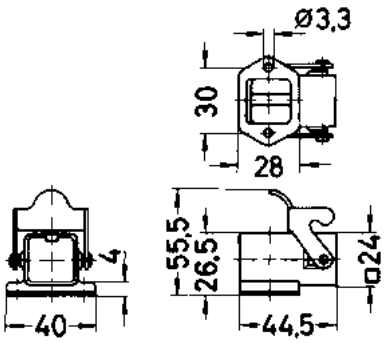 Panel cut out 22 x 22 mm
Han A® , Bulkhead mounted housings, Angled, Black			09 20 003 0827	
Han A® , Surface mounted housing, Top entry, Grey 	1x M20		19 20 003 0220	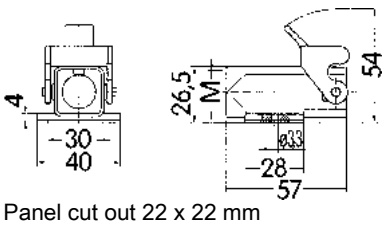 Panel cut out 22 x 22 mm
Han A® , Surface mounted housing, Top entry, Black	1x M20		19 20 003 0227	

Hoods/Housings, thermoplastic Han® 3 A

Size 3 A

Identification	Cable entry	Cable diameter (mm)	Part number	Drawing (dimensions in mm)
Han A® , Cable to cable housing, Top entry, Grey 	1x M20		19 20 003 0720	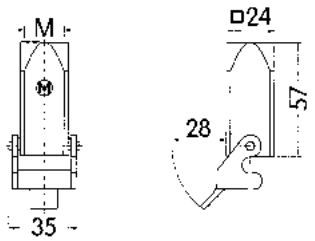
Han A® , Cable to cable housing, Top entry, Black	1x M20		19 20 003 0727	
Han A® , Protection cover, for cable to cable housing, Thermoplastic, With seal, With fixing cord, Grey  for mounted female insert			09 20 003 5447	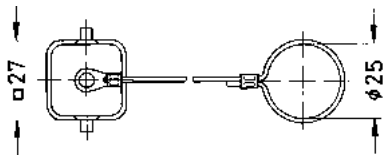
Han A® , Protection cover, for cable to cable housing, Thermoplastic, With fixing cord, Grey  for mounted male insert			09 20 003 5448	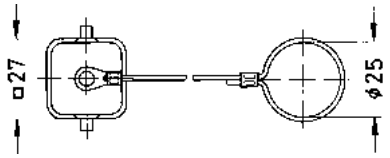
Han A® , Protection cover, for hoods, Thermoplastic, With fixing cord, With seal, Grey 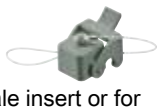 for mounted female insert or for mounted Han-Brid® insert			09 20 003 5441	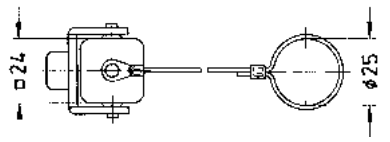
Han A® , Protection cover, for hoods, Thermoplastic, With fixing cord, Grey  for mounted male insert			09 20 003 5442	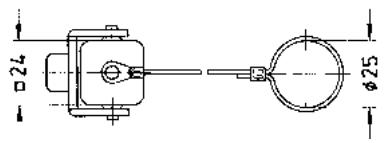

Identification	Cable entry	Cable diameter (mm)	Part number	Drawing (dimensions in mm)
Han A® , Protection cover, for bulkhead mounted housings, for surface mounted housings, Thermoplastic, Grey  for mounted male insert			09 20 003 5407	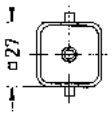
Han A® , Protection cover, for bulkhead mounted housings, for surface mounted housings, Thermoplastic, With seal, Grey  for mounted female insert or for mounted Han-Brid® insert			09 20 003 5408	
Han A® , Protection cover, for bulkhead mounted housings, for surface mounted housings, Thermoplastic, With seal, Black  for mounted female insert or for mounted Han-Brid® insert			09 20 003 5409	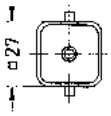
Han A® , Protection cover, for bulkhead mounted housings, for surface mounted housings, Thermoplastic, With seal, With fixing cord, Grey  for mounted female insert			09 20 003 5445	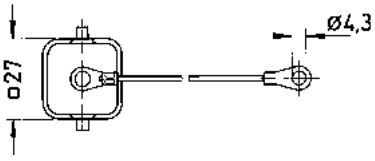

Identification	Cable entry	Cable diameter (mm)	Part number	Drawing (dimensions in mm)
Han A® , Protection cover, for bulkhead mounted housings, for surface mounted housings, Thermoplastic, With fixing cord, Grey  for mounted male insert			09 20 003 5446	
Han A® , Protection cover, for bulkhead mounted housings, for surface mounted housings, Thermoplastic, With seal, With fixing cord, Black  for mounted female insert			09 20 003 5449	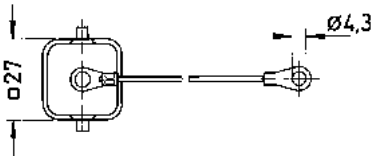
Han A® , Protection cover, for bulkhead mounted housings, for surface mounted housings, Thermoplastic, With fixing cord, Black  for mounted male insert			09 20 003 5450	

Features

- Standard Hoods/housings for industrial applications
- Slim, space saving construction type

Technical characteristics

Limiting temperature	-40 ... +125 °C
Degree of protection acc. to IEC 60529	IP65
Type rating acc. to UL 50 / UL 50E	4, 4X, 12
Material (hood/housing)	Aluminium die-cast
Surface (hood/housing)	Powder-coated
Colour (hood/housing)	RAL 7037 (dust grey)
Material (seal)	NBR
Material (locking)	Polycarbonate, Stainless steel
Colour (locking)	RAL 7037 (dust grey)
Material flammability class acc. to UL 94 (locking levers)	V-0
RoHS	compliant, compliant with exemption
RoHS exemptions	**6b:** Lead as an alloying element in aluminium containing up to 0,4 % lead by weight, **6a:** Lead as an alloying element in steel for machining purposes and in galvanised steel containing up to 0,35 % lead by weight

Specifications and approvals

UL 1977 ECBT2.E235076
CSA-C22.2 No. 182.3 ECBT8.E235076
DNV GL

Standard hoods/housings Han® 10 A

Size 10 A

Standard Hoods/housings for industrial applications
Single locking lever

Identification	Cable entry	Part number Low construction	Part number High construction	Drawing (dimensions in mm)
Han A® , Hoods, Top entry 	1x M20 1x M25	19 20 010 1440	19 20 010 0446	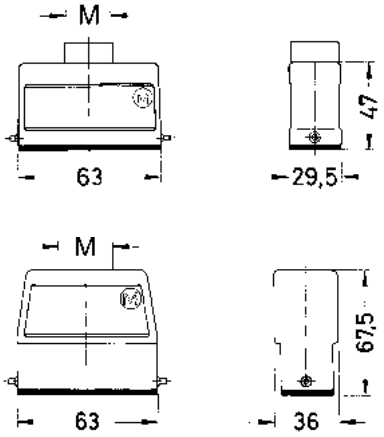
Han A® , Hoods, Side entry 	1x M20 1x M25	19 20 010 1540	19 20 010 0546	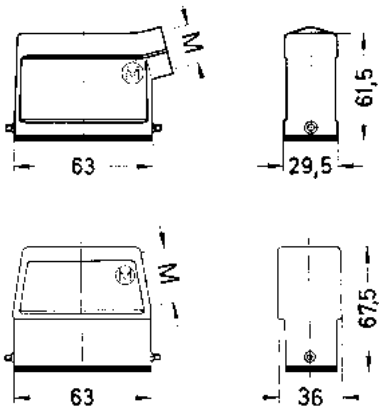
Han A® , Hoods, Without cable entry 			09 20 010 0801	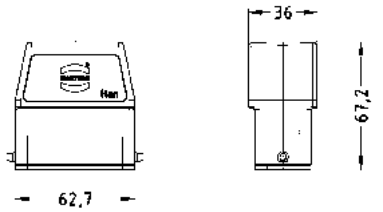

Standard hoods/housings Han® 10 A

Size 10 A

Identification	Cable entry	Part number Low construction	Part number High construction	Drawing (dimensions in mm)
Han A® , Bulkhead mounted housings, Han-Easy Lock® 		09 20 010 0301		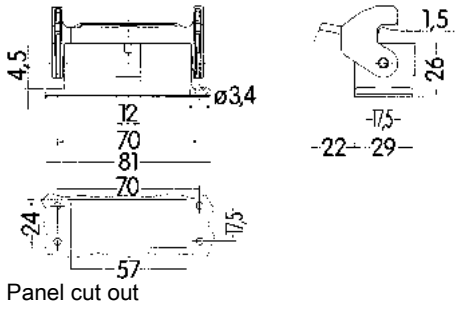 Panel cut out
Han A® , Bulkhead mounted housings, With thermo-plastic cover, Han-Easy Lock® 		09 20 010 0321		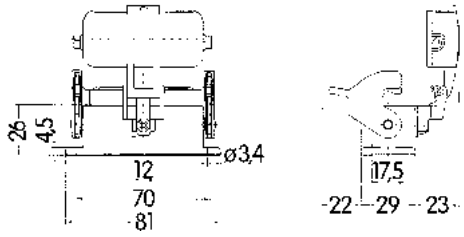
Han A® , Surface mounted housing, Side entry, Han-Easy Lock® 	1x M25 2x M20	19 20 010 0251 19 20 010 0290		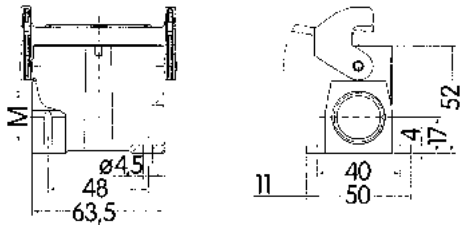
Han A® , Surface mounted housing, With thermo-plastic cover, Side entry, Han-Easy Lock® 	2x M20		19 20 010 0295	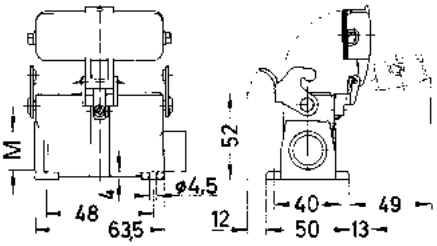
Han A® , Cable to cable housing, Top entry, Han-Easy Lock® 	1x M20	19 20 010 1730		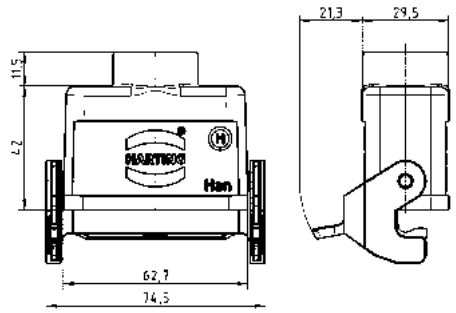

Standard hoods/housings Han® 10 A

Size 10 A

Identification	Cable entry	Part number Low construction	Part number High construction	Drawing (dimensions in mm)
Han A® , Protection cover, for hoods, Metal, With fixing cord 		09 20 010 5423	09 20 010 5423	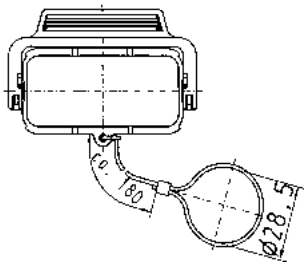
Han A® , Protection cover, for bulkhead mounted housings, for surface mounted housings, for cable to cable housing, Metal, With fixing cord 		09 20 010 5425	09 20 010 5425	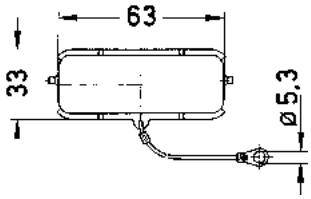

Standard Hoods/housings for industrial applications
Single locking lever

Identification	Cable entry	Part number Low construction	Part number High construction	Drawing (dimensions in mm)
Han A® , Hoods, Top entry 	1x M20 1x M25	19 20 016 1440	19 20 016 0446	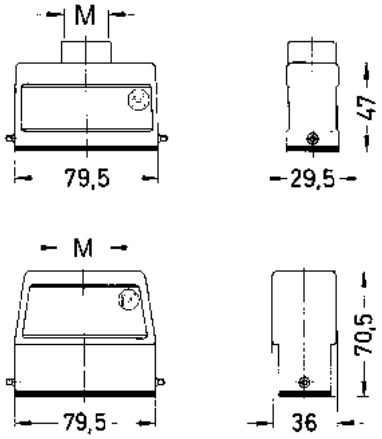
Han A® , Hoods, Side entry 	1x M20 1x M25	19 20 016 1540	19 20 016 0546	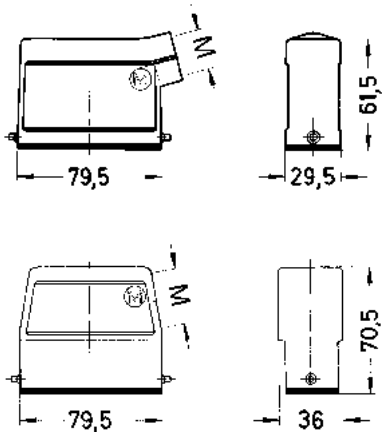
Han A® , Hoods, Without cable entry 			09 20 016 0801	

Standard hoods/housings Han® 16 A

Size 16 A

Identification	Cable entry	Part number Low construction	Part number High construction	Drawing (dimensions in mm)
Han A® , Bulkhead mounted housings, Han-Easy Lock® 		09 20 016 0301		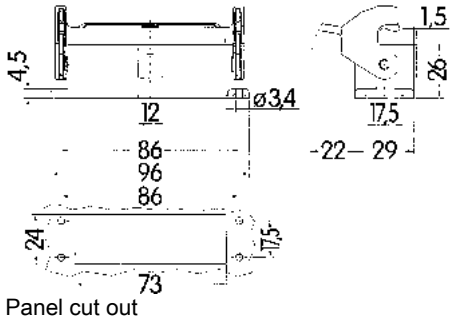 Panel cut out
Han A® , Bulkhead mounted housings, With thermo-plastic cover, Han-Easy Lock® 		09 20 016 0321		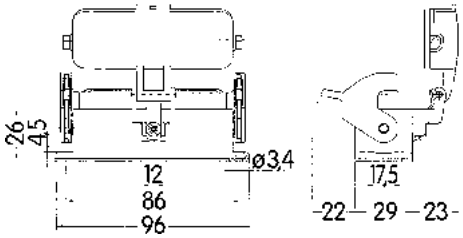
Han A® , Surface mounted housing, Side entry, Han-Easy Lock® 	1x M25 2x M20 2x M25	19 20 016 0251 19 20 016 0290 19 20 016 0291		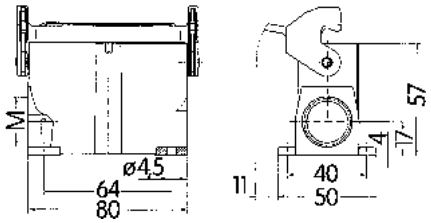
Han A® , Surface mounted housing, With thermo-plastic cover, Side entry, Han-Easy Lock® 	2x M20	19 20 016 0295		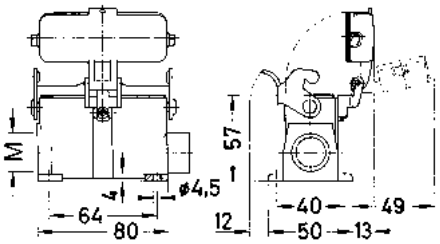
Han A® , Protection cover, for hoods, Metal, With fixing cord, Han-Easy Lock® 		09 20 016 5423	09 20 016 5423	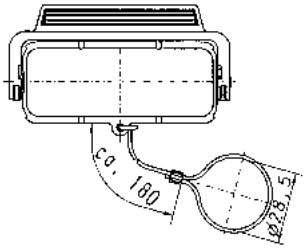

Identification	Cable entry	Part number Low construction	Part number High construction	Drawing (dimensions in mm)
Han A® , Protection cover, for bulkhead mounted housings, for surface mounted housings, for cable to cable housing, Metal, With fixing cord 		09 20 016 5425	09 20 016 5425	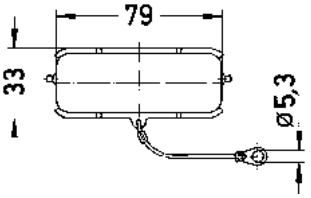

Standard hoods/housings Han® 32 A

Size 32 A

Standard Hoods/housings for industrial applications
Double locking lever

Identification	Cable entry	Part number Low construction	Part number High construction	Drawing (dimensions in mm)
Han A® , Hoods, Top entry 	1x M25 1x M32		19 20 032 0426 19 20 032 0427	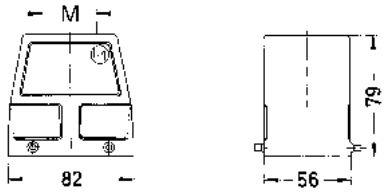
Han A® , Hoods, Side entry 	1x M25 1x M32	19 20 032 1521	19 20 032 0527	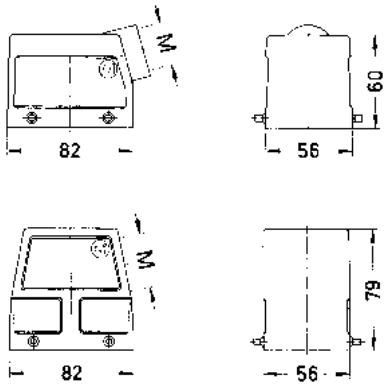
Han A® , Bulkhead mounted housings, Han-Easy Lock® 		09 20 032 0301		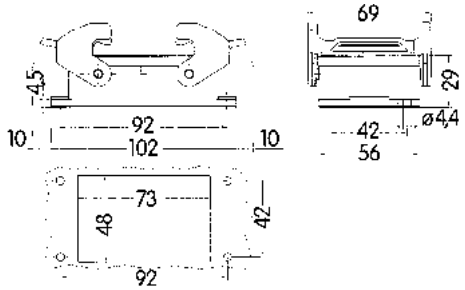 Panel cut out
Han A® , Surface mounted housing, Side entry, Han-Easy Lock® 	1x M25 1x M32 2x M32		19 20 032 0231 19 20 032 0232 19 20 032 0272	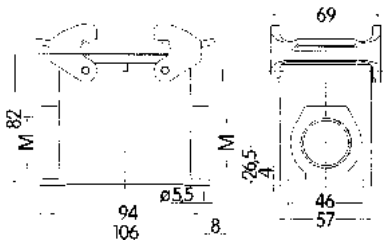

Standard hoods/housings Han® 32 A

Size 32 A

Identification	Cable entry	Part number Low construction	Part number High construction	Drawing (dimensions in mm)
Han A® , Protection cover, for hoods, Metal 		09 20 032 5401	09 20 032 5401	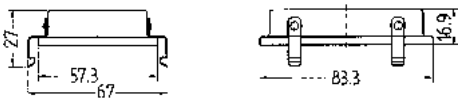
Han A® , Protection cover, for bulkhead mounted housings, for surface mounted housings, Metal 		09 20 032 5405	09 20 032 5405	
Han A® , Protection cover, for bulkhead mounted housings, for surface mounted housings, Thermoplastic 		09 20 032 5407	09 20 032 5407	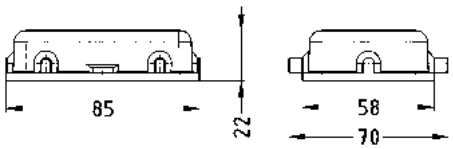
Han A® , Protection cover, for bulkhead mounted housings, for surface mounted housings, Thermoplastic, With fixing cord 		09 20 032 5408	09 20 032 5408	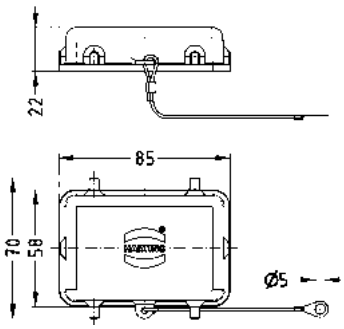

Standard hoods/housings Han® 32 A

Size 32 A

Standard Hoods/housings for industrial applications
Double locking lever (on the hood)

Identification	Cable entry	Part number Low construction	Part number High construction	Drawing (dimensions in mm)
Han A® , Hoods, Top entry, Han-Easy Lock® 	1x M32		19 20 032 0437	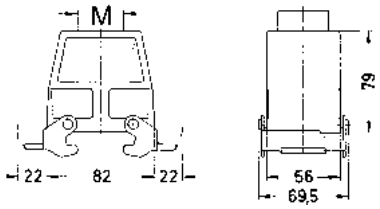
Han A® , Hoods, Side entry, Han-Easy Lock® 	1x M25 1x M32	19 20 032 1531	19 20 032 0537	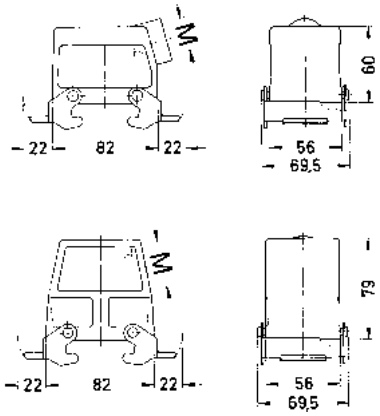
Han A® , Bulkhead mounted housings, With thermo-plastic cover 		09 20 032 0302		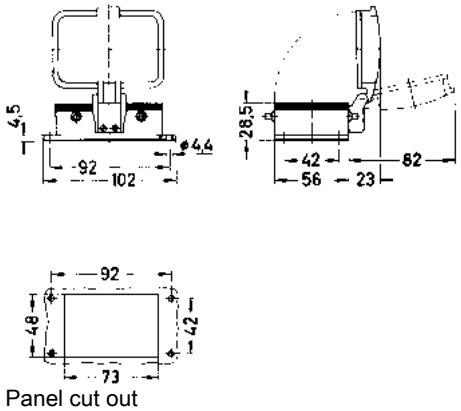 Panel cut out

Identification	Cable entry	Part number Low construction	Part number High construction	Drawing (dimensions in mm)
Han A® , Surface mounted housing, With thermo-plastic cover, Side entry 	1x M25		19 20 032 0226	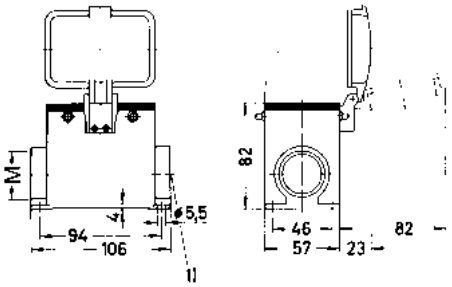 1) Blind way for one cable entry

Features

- Standard hoods/housings for industrial connectors
- Locking levers: Han-Easy Lock®
- Field of application: for excellent mechanical and electrical protection in demanding environments, for example, in the automobile and mechanical engineering industries also for process and regulation control applications
- Distinguishing feature: hoods/housings colour-coded grey (RAL 7037)
- Many variations: for precise industrial applications

Technical characteristics

Limiting temperature	-40 ... +125 °C
Degree of protection acc. to IEC 60529	IP65, IP67, in combination with special bulkhead mounted housings, IP44, in unlocked position
Type rating acc. to UL 50 / UL 50E	4, 4X, 12
Material (hood/housing)	Aluminium die-cast
Surface (hood/housing)	Powder-coated
Colour (hood/housing)	RAL 7037 (dust grey)
Material (seal)	NBR
Material (locking)	Polycarbonate, Stainless steel
Colour (locking)	RAL 7037 (dust grey)
Material flammability class acc. to UL 94 (locking levers)	V-0
RoHS	compliant, compliant with exemption
RoHS exemptions	**6a:** Lead as an alloying element in steel for machining purposes and in galvanised steel containing up to 0,35 % lead by weight, **6b:** Lead as an alloying element in aluminium containing up to 0,4 % lead by weight

Specifications and approvals

UL 1977 ECBT2.E235076
CSA-C22.2 No. 182.3 ECBT8.E235076
DNV GL

Details

Standard degree of protection: IP65

IP67 possible, in combination with special bulkhead mounted housings

IP44 for self-closing covers in unlocked position

Standard hoods/housings Han® 6 B

Size 6 B

Standard hoods/housings for industrial connectors
Single locking lever

Identification	Cable entry	Part number Low construction	Part number High construction	Drawing (dimensions in mm)
Han® B , Hoods, Top entry 	1x M20 1x M25 1x M32	19 30 006 1440	19 30 006 0446 19 30 006 0447	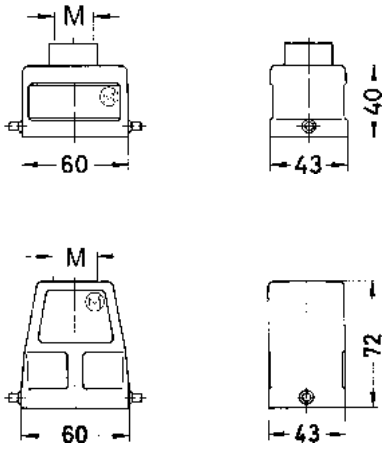
Han® B , Hoods, Side entry 	1x M20 1x M25 1x M32	19 30 006 1540 19 30 006 1541	19 30 006 0546 19 30 006 0547	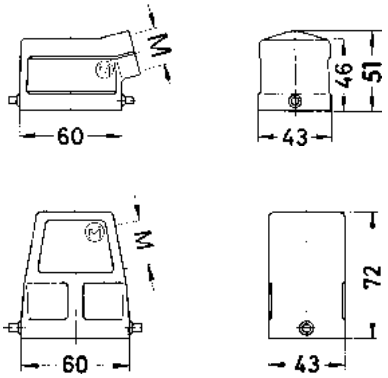
Han® B , Hoods, Without cable entry 			09 30 006 0801	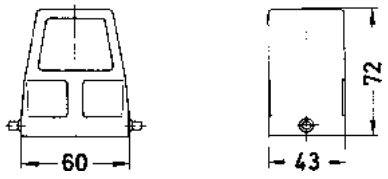

Standard hoods/housings Han® 6 B

Size 6 B

Identification	Cable entry	Part number Low construction	Part number High construction	Drawing (dimensions in mm)
Han® B , Bulkhead mounted housings, Han-Easy Lock® 		09 30 006 0301		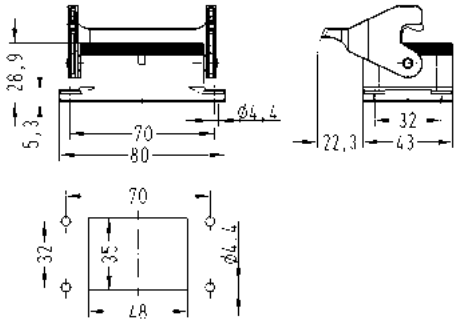 Panel cut out
Han® B , Bulkhead mounted housings, Han-Easy Lock®, IP67 		09 30 006 1301		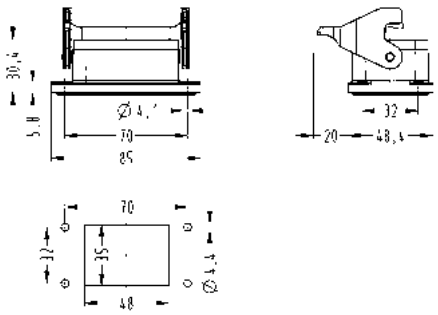 Panel cut out
Han® B , Bulkhead mounted housings, With thermo-plastic cover, Han-Easy Lock® 		09 30 006 0302		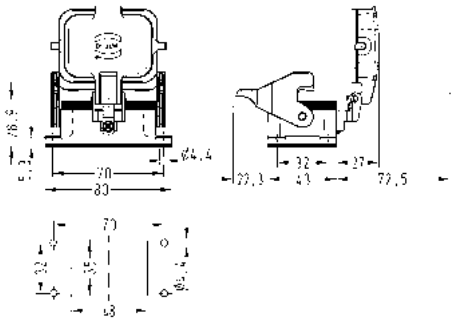 Panel cut out
Han® B , Bulkhead mounted housings, With metal cover, Han-Easy Lock® 		09 30 006 0318		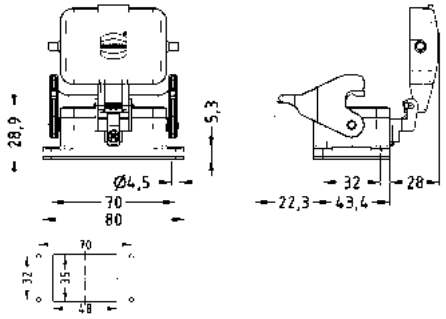 Panel cut out

Standard hoods/housings Han® 6 B

Size 6 B

Identification	Cable entry	Part number Low construction	Part number High construction	Drawing (dimensions in mm)
Han® B , Bulkhead mounted housings, With self-closing cover, Han-Easy Lock® 		09 30 006 1306		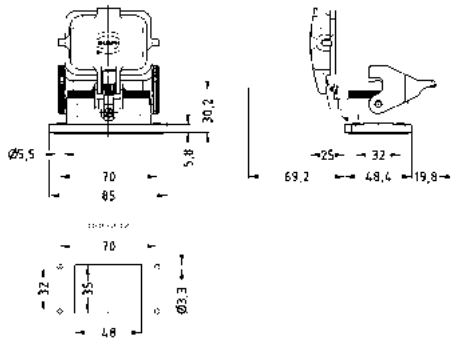 Panel cut out
Han® B , Bulkhead mounted housings, With thermo-plastic cover, Han-Easy Lock®, IP67 		09 30 006 1308		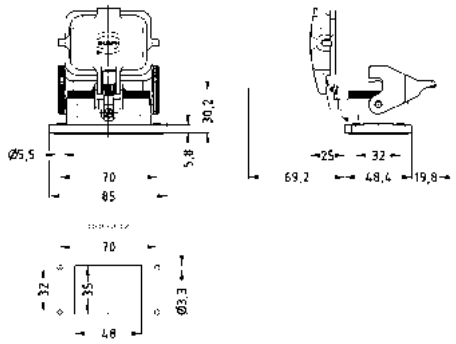 Panel cut out
Han® B , Surface mounted housing, Side entry, Han-Easy Lock® 	1x M20 2x M20 2x M25 2x M32	19 30 006 1250 19 30 006 1290	19 30 006 0291 19 30 006 0292	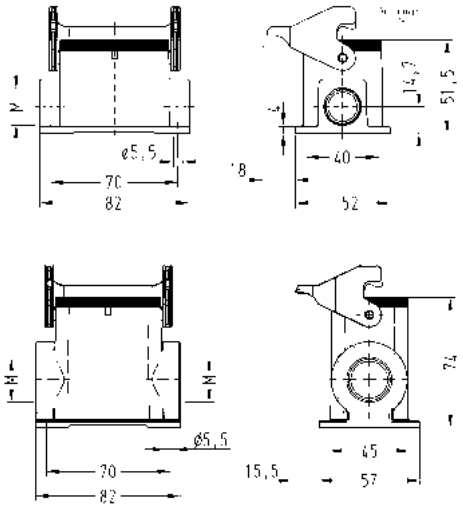

Standard hoods/housings Han® 6 B

Size 6 B

Identification	Cable entry	Part number Low construction	Part number High construction	Drawing (dimensions in mm)
Han® B , Surface mounted housing, With thermo-plastic cover, Side entry, Han-Easy Lock® 	1x M20 2x M20 2x M25 2x M32	19 30 006 1255 19 30 006 1295	19 30 006 0296 19 30 006 0297	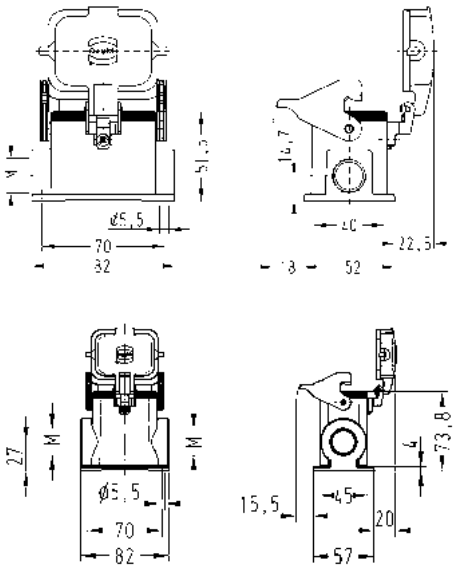
Han® B , Surface mounted housing, With metal cover, Side entry, Han-Easy Lock® 	1x M20 2x M20 2x M25 2x M32	19 30 006 2255 19 30 006 2295	19 30 006 7296 19 30 006 7297	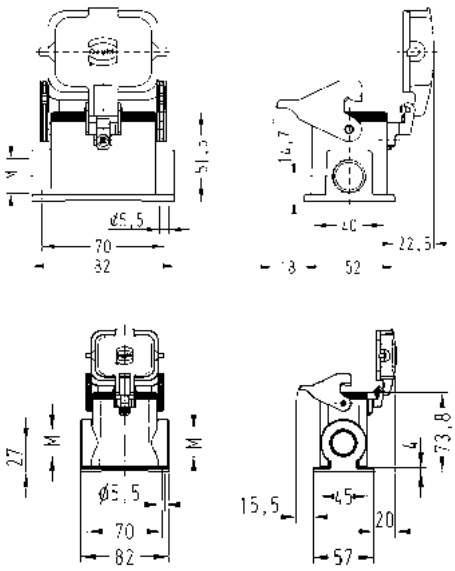
Han® B , Cable to cable housing, Top entry, Han-Easy Lock® 	1x M20 1x M25 1x M32	19 30 006 1750	19 30 006 0756 19 30 006 0757	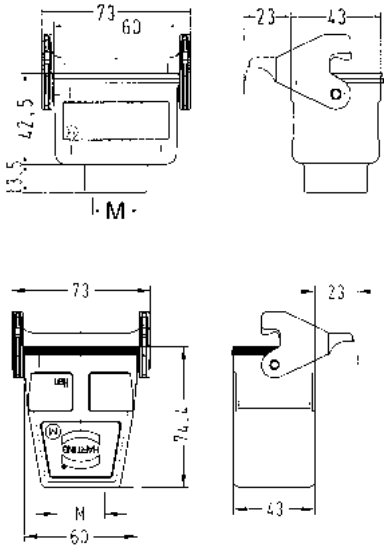

Identification	Cable entry	Part number Low construction	Part number High construction	Drawing (dimensions in mm)
Han® B , Panel feed through housing, Top entry, Han-Easy Lock® 	1x M25 1x M32		19 30 006 1121 19 30 006 1122	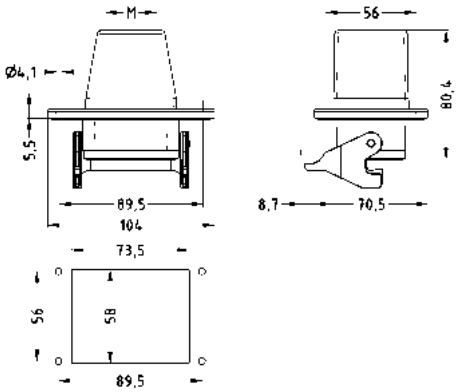 Panel cut out
Han® B , Flange housings, Top entry, Han-Easy Lock® 	1x M25	19 30 006 0716		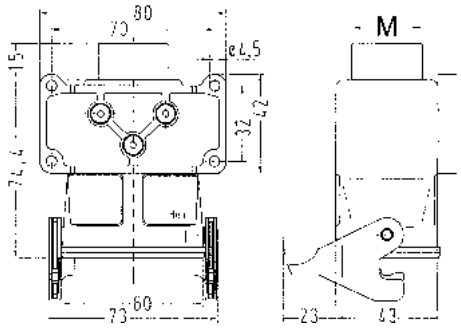
Han® B , Protection cover, for hoods, With fixing cord, Han-Easy Lock® 		09 30 006 5423	09 30 006 5423	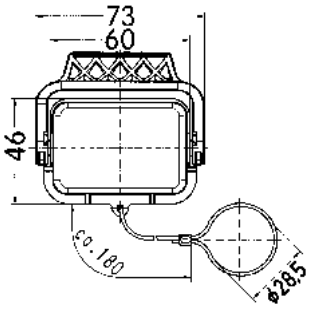
Han® B , Protection cover, for bulkhead mounted housings, for surface mounted housings, Thermoplastic 		09 30 006 5405	09 30 006 5405	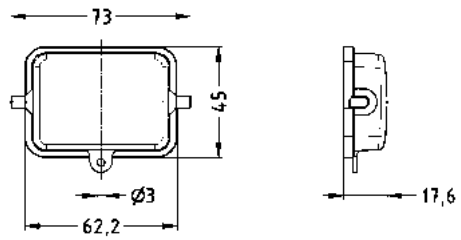

Identification	Cable entry	Part number Low construction	Part number High construction	Drawing (dimensions in mm)
Han® B , Protection cover, for bulkhead mounted housings, for surface mounted housings, Metal, With fixing cord 		09 30 006 5425	09 30 006 5425	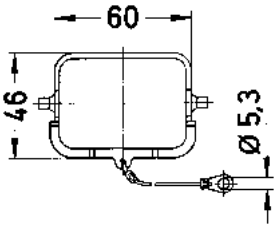
Han® B , Protection cover, for cable to cable housing, Metal, With fixing cord 		09 30 006 5427	09 30 006 5427	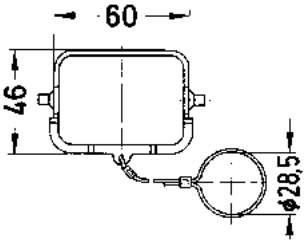

Standard hoods/housings Han® 6 B

Size 6 B

Standard hoods/housings for industrial connectors
Central locking lever (on the hood)

Identification	Cable entry	Part number Low construction	Part number High construction	Drawing (dimensions in mm)
Han® B , Hoods, Side entry 	1x M25 1x M32		19 30 006 0586 19 30 006 0587	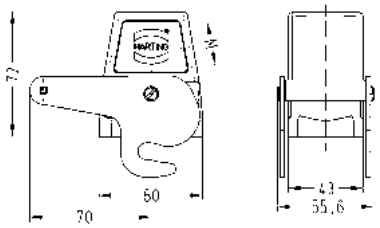
Han® B , Bulkhead mounted housings 		09 30 006 0381		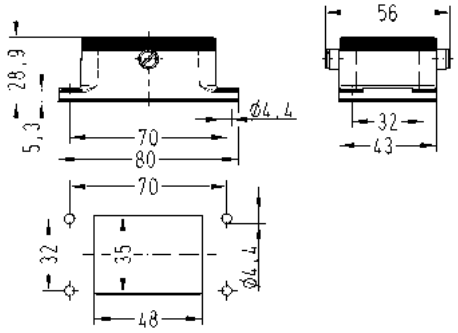 Panel cut out
Han® B , Panel feed through housing, Top entry 	1x M25 1x M32		19 30 006 1141 19 30 006 1142	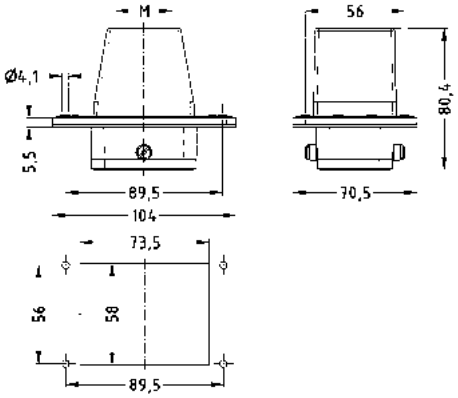 Panel cut out

Standard hoods/housings for industrial connectors
Double locking lever

Identification	Cable entry	Part number Low construction	Part number High construction	Drawing (dimensions in mm)
Han® B , Hoods, Top entry 	1x M20 1x M25 1x M32 1x M40 2x M20	19 30 010 1420 19 30 010 1421	19 30 010 0427 19 30 010 0428 19 30 010 0465	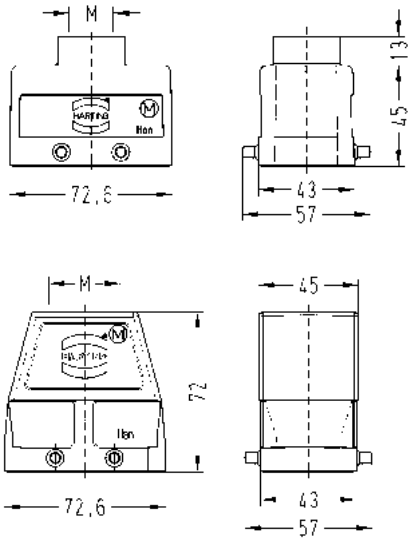
Han® B , Hoods, Side entry 	1x M20 1x M25 1x M32	19 30 010 1520 19 30 010 1521	19 30 010 0526 19 30 010 0527	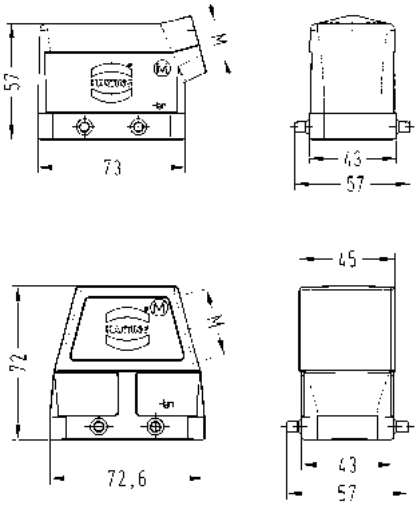
Han® B , Hoods, Without cable entry 			09 30 010 0801	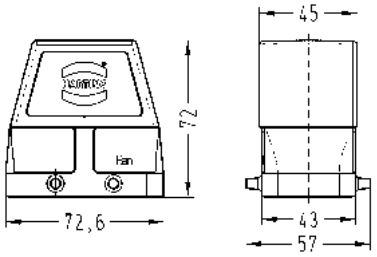

Identification	Cable entry	Part number Low construction	Part number High construction	Drawing (dimensions in mm)
Han® B , Bulkhead mounted housings, Han-Easy Lock® 		09 30 010 0301		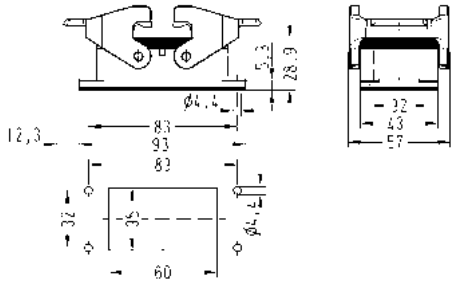 Panel cut out
Han® B , Bulkhead mounted housings, Han-Easy Lock®, IP67 		09 30 010 1301		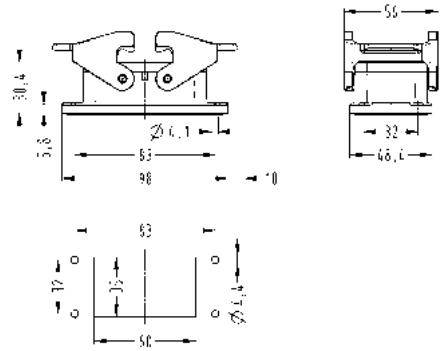 Panel cut out
Han® B , Surface mounted housing, Side entry, Han-Easy Lock® 	1x M20 1x M25 2x M20 2x M25 2x M32	19 30 010 1230 19 30 010 1231 19 30 010 1270	19 30 010 0231 19 30 010 0271 19 30 010 0272	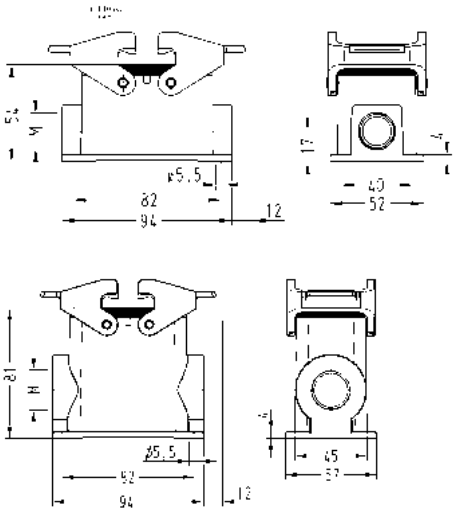

Standard hoods/housings Han® 10 B

Size 10 B

Identification	Cable entry	Part number Low construction	Part number High construction	Drawing (dimensions in mm)
Han® B , Cable to cable housing, Top entry, Han-Easy Lock® 	1x M20 1x M25 1x M32	19 30 010 1730	19 30 010 0736 19 30 010 0737	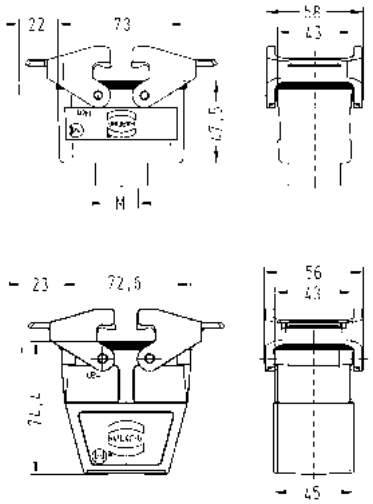
Han® B , Panel feed through housing, Top entry, Han-Easy Lock® 	1x M25 1x M32		19 30 010 1121 19 30 010 1122	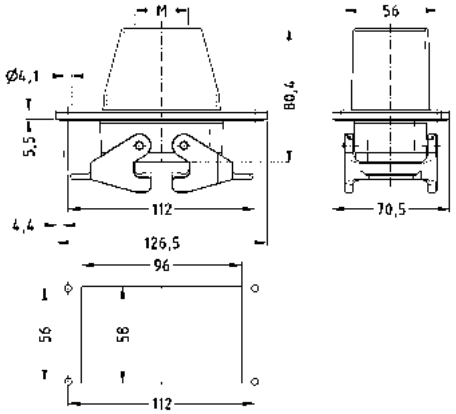 Panel cut out
Han® B , Protection cover, for hoods, Metal, With fixing cord, Han-Easy Lock® 		09 30 010 5423	09 30 010 5423	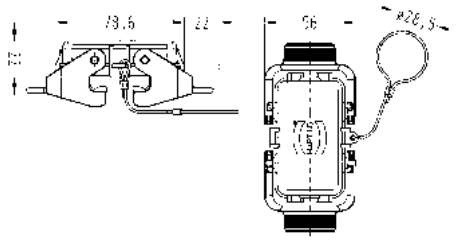
Han® B , Protection cover, for bulkhead mounted housings, for surface mounted housings, Thermoplastic 		09 30 010 5407	09 30 010 5407	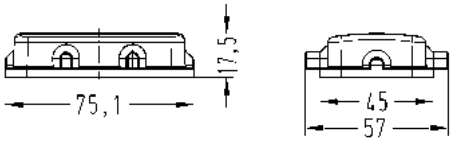

Identification	Cable entry	Part number Low construction	Part number High construction	Drawing (dimensions in mm)
Han® B , Protection cover, for bulkhead mounted housings, for surface mounted housings, Metal, With fixing cord 		09 30 010 5425	09 30 010 5425	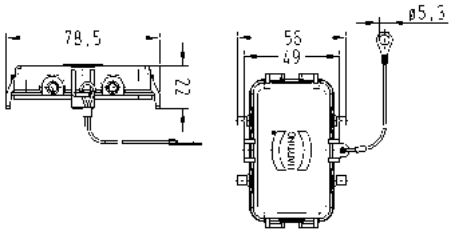
Han® B , Protection cover, for cable to cable housing, Metal, With fixing cord 		09 30 010 5427	09 30 010 5427	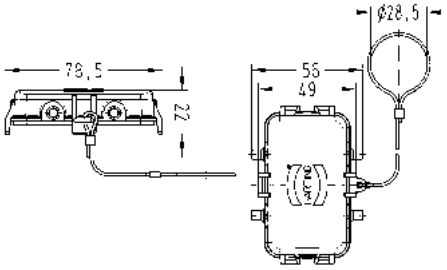

Standard hoods/housings for industrial connectors
Double locking lever (on the hood)

Identification	Cable entry	Part number Low construction	Part number High construction	Drawing (dimensions in mm)
Han® B , Hoods, Top entry, Han-Easy Lock® 	1x M20 1x M25	19 30 010 1430	19 30 010 0436	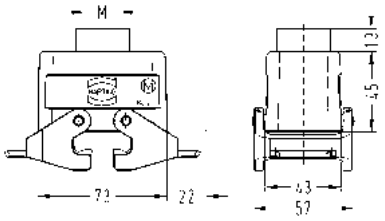 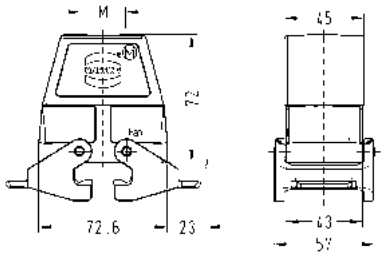
Han® B , Hoods, Side entry, Han-Easy Lock® 	1x M20 1x M25 1x M32	19 30 010 1530 19 30 010 1531	19 30 010 0537	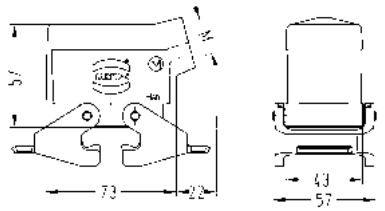 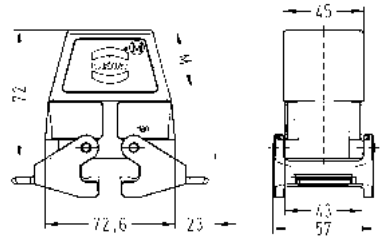

Identification	Cable entry	Part number Low construction	Part number High construction	Drawing (dimensions in mm)
Han® B , Bulkhead mounted housings, With thermo-plastic cover 		09 30 010 0302		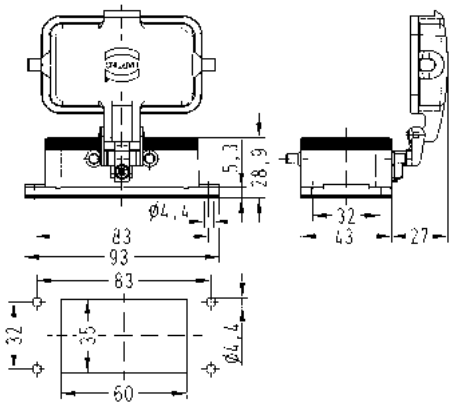 Panel cut out
Han® B , Bulkhead mounted housings, With metal cover 		09 30 010 0317		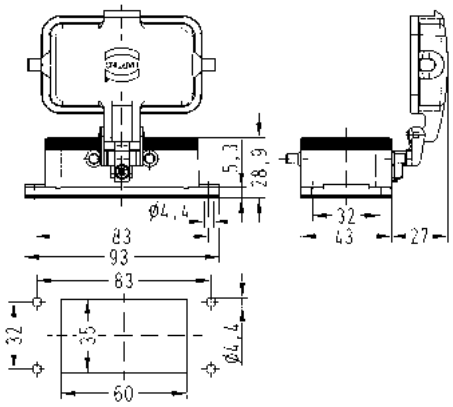 Panel cut out
Han® B , Surface mounted housing, With thermo-plastic cover, Side entry 	1x M20 2x M20 2x M25	19 30 010 1225 19 30 010 1265	19 30 010 0266	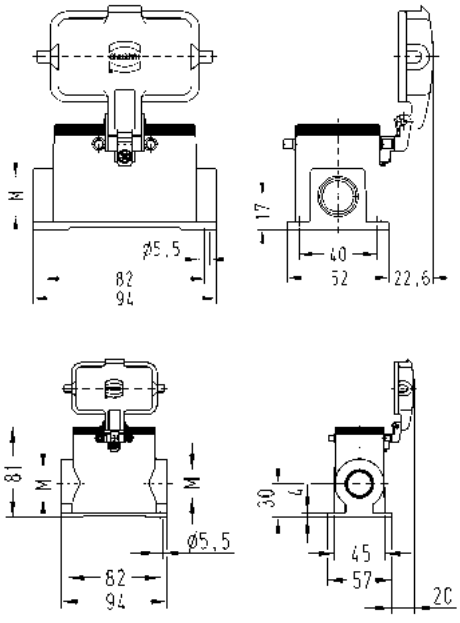

Identification	Cable entry	Part number Low construction	Part number High construction	Drawing (dimensions in mm)
Han® B , Protection cover, for hoods, Metal, With fixing cord 		09 30 010 5457	09 30 010 5457	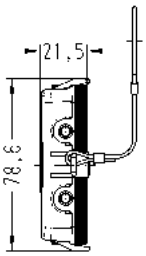 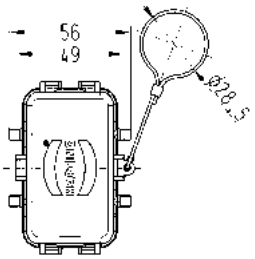

Standard hoods/housings for industrial connectors
Single locking lever

Identification	Cable entry	Part number Low construction	Part number High construction	Drawing (dimensions in mm)
Han® B , Hoods, Top entry 	1x M20 1x M25 1x M32 1x M40 2x M20	19 30 010 1440 19 30 010 1441	19 30 010 0447 19 30 010 0448 19 30 010 0495	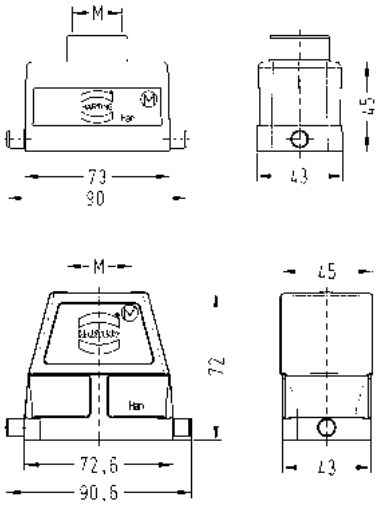
Han® B , Hoods, Side entry 	1x M20 1x M25 1x M32	19 30 010 1540 19 30 010 1541	19 30 010 0547	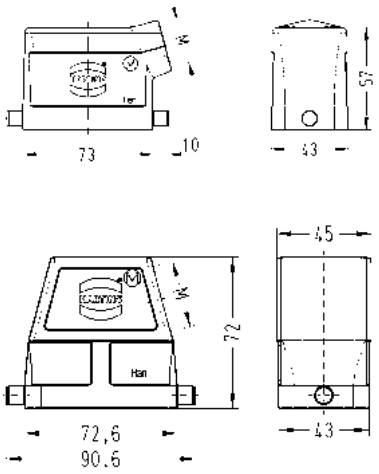
Han® B , Hoods, Without cable entry 			09 30 010 0803	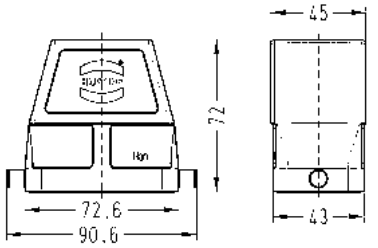

Standard hoods/housings Han® 10 B

Size 10 B

Identification	Cable entry	Part number Low construction	Part number High construction	Drawing (dimensions in mm)
Han® B , Bulkhead mounted housings, Han-Easy Lock® 		09 30 010 0305 09 30 010 1308		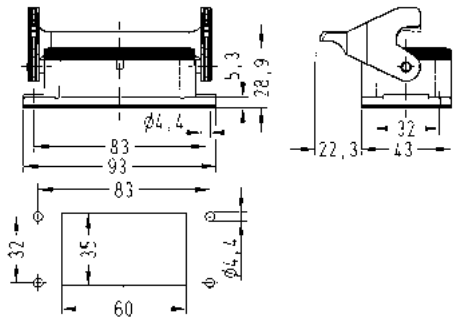 Panel cut out
Han® B , Bulkhead mounted housings, Han-Easy Lock®, IP67 		09 30 010 1305		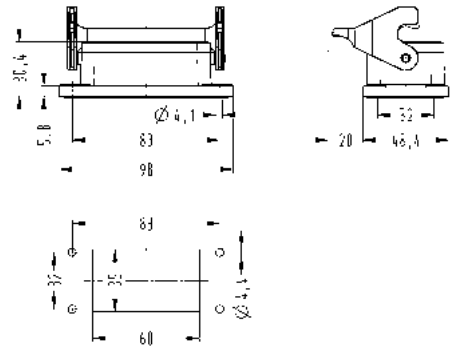 Panel cut out
Han® B , Bulkhead mounted housings, With thermo-plastic cover, Han-Easy Lock® 		09 30 010 0303		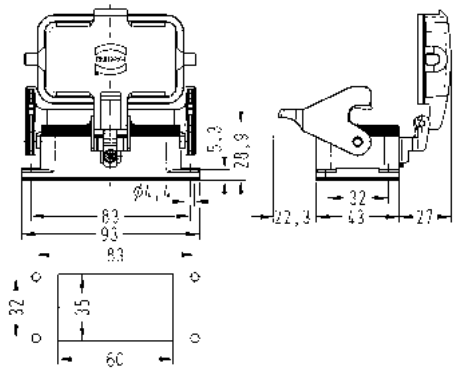 Panel cut out

Identification	Cable entry	Part number Low construction	Part number High construction	Drawing (dimensions in mm)
Han® B , Bulkhead mounted housings, With metal cover, Han-Easy Lock® 		09 30 010 0318		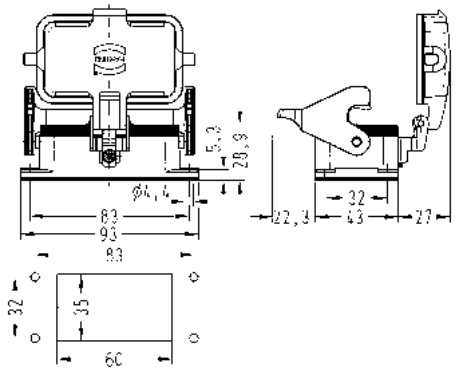 Panel cut out
Han® B , Bulkhead mounted housings, With self-closing cover, Han-Easy Lock® 		09 30 010 1306		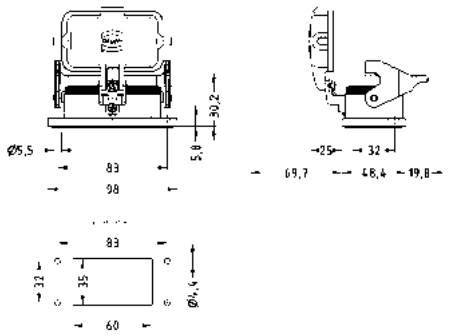 Panel cut out
Han® B , Surface mounted housing, Side entry, Han-Easy Lock® 	1x M20 2x M20 2x M25 2x M32	19 30 010 1250 19 30 010 1290	19 30 010 0291 19 30 010 0292	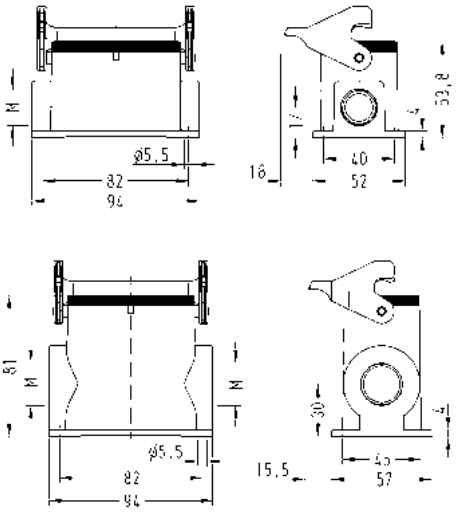

Standard hoods/housings Han® 10 B

Size 10 B

Identification	Cable entry	Part number Low construction	Part number High construction	Drawing (dimensions in mm)
Han® B , Surface mounted housing, With thermo-plastic cover, Side entry, Han-Easy Lock® 	1x M20 2x M20 2x M25 2x M32	19 30 010 1255 19 30 010 1295	19 30 010 0296 19 30 010 0297	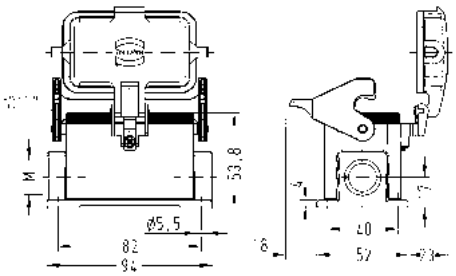 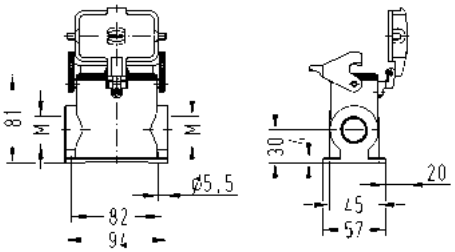
Han® B , Surface mounted housing, With metal cover, Side entry, Han-Easy Lock® 	2x M20 2x M25 2x M32	19 30 010 2295	19 30 010 7296 19 30 010 7297	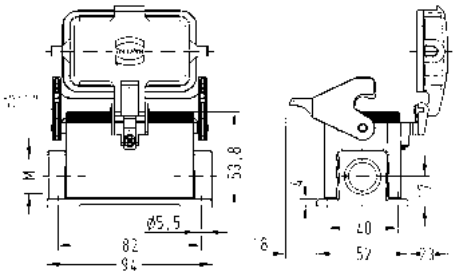 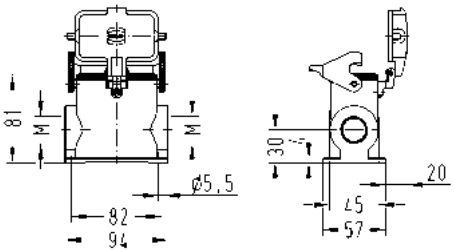
Han® B , Cable to cable housing, Top entry, Han-Easy Lock® 	1x M20 1x M25 1x M32	19 30 010 1750	19 30 010 0756 19 30 010 0757	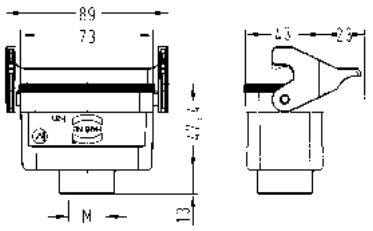 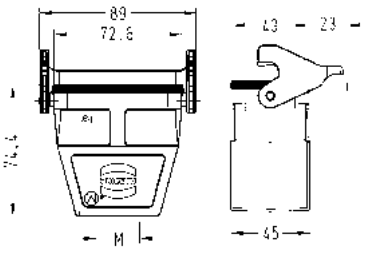

Identification	Cable entry	Part number Low construction	Part number High construction	Drawing (dimensions in mm)
Han® B , Panel feed through housing, Top entry, Han-Easy Lock® 	1x M25 1x M32		19 30 010 1131 19 30 010 1132	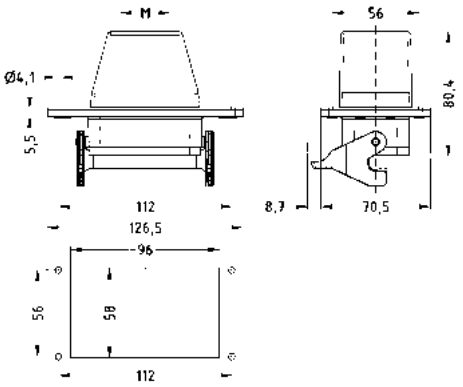 Panel cut out
Han® B , Protection cover, for hoods, Metal, With fixing cord, Han-Easy Lock® 		09 30 010 5432	09 30 010 5432	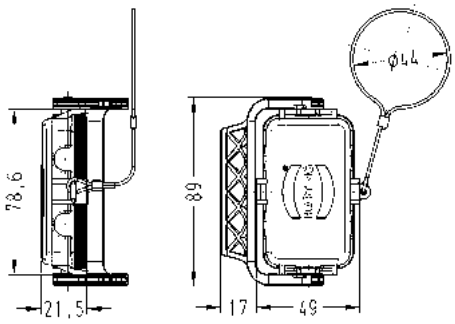
Han® B , Protection cover, for bulkhead mounted housings, for surface mounted housings, for cable to cable housing, Thermoplastic, With fixing cord 		09 30 010 5412	09 30 010 5412	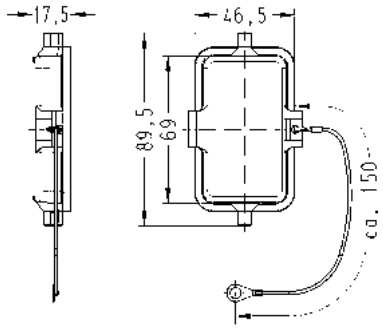

Standard hoods/housings for industrial connectors
Central locking lever (on the hood)

Identification	Cable entry	Part number Low construction	Part number High construction	Drawing (dimensions in mm)
Han® B , Hoods, Side entry 	1x M25		19 30 010 0586	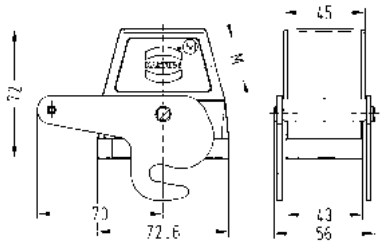
Han® B , Bulkhead mounted housings 		09 30 010 0381		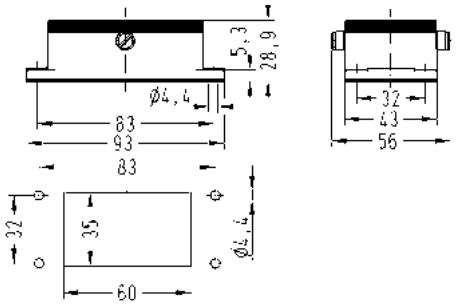 Panel cut out
Han® B , Panel feed through housing, Top entry 	1x M25 1x M32		19 30 010 1141 19 30 010 1142	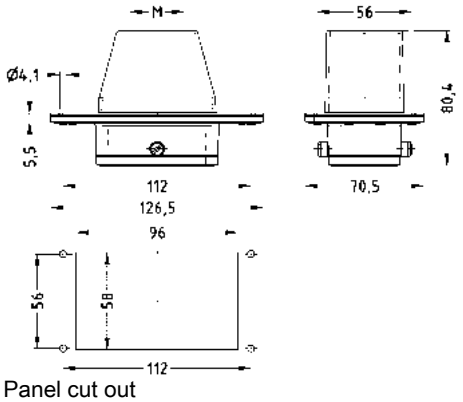 Panel cut out

Standard hoods/housings for industrial connectors
Double locking lever

Identification	Cable entry	Part number Low construction	Part number High construction	Drawing (dimensions in mm)
Han® B , Hoods, Top entry 	1x M25 1x M32 1x M40 2x M25	19 30 016 1421 19 30 016 1422	19 30 016 0427 19 30 016 0428 19 30 016 0466	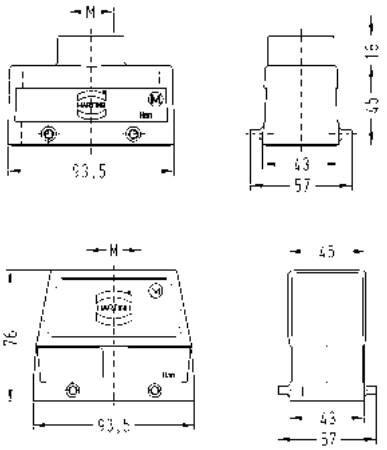
Han® B , Hoods, Special type, Top entry 	1x M50		19 30 016 0429	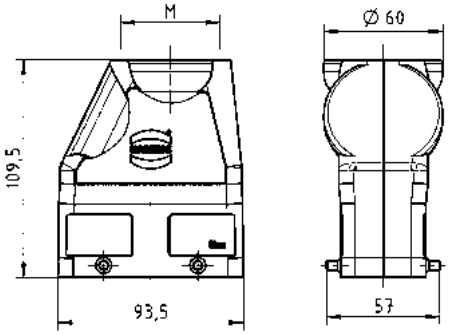
Han® B , Hoods, Flat cable entry, Top entry 			09 30 016 4441	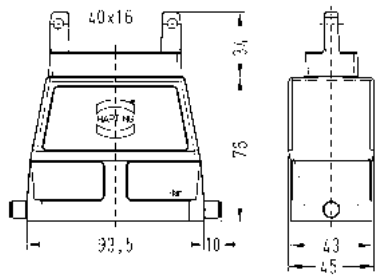

Standard hoods/housings Han® 16 B

Size 16 B

Identification	Cable entry	Part number Low construction	Part number High construction	Drawing (dimensions in mm)
Han® B , Hoods, Side entry 	1x M25 1x M32 1x M40	19 30 016 1521 19 30 016 1522	19 30 016 0527 19 30 016 0528	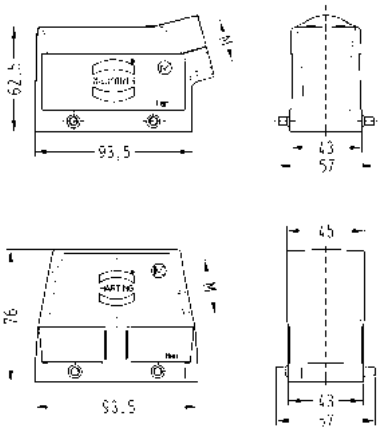
Han® B , Hoods, Special type, Side entry 	1x M40 1x M50		19 30 016 0523 19 30 016 0529	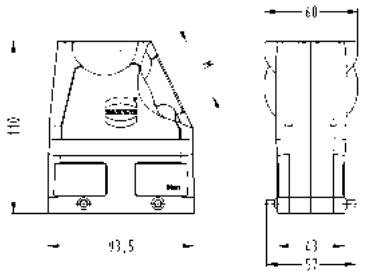
Han® B , Hoods, Angled entry 	2x M25		19 30 016 0666	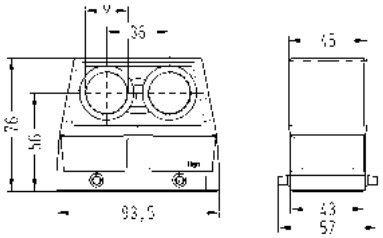
Han® B , Hoods, Without cable entry 			09 30 016 0801	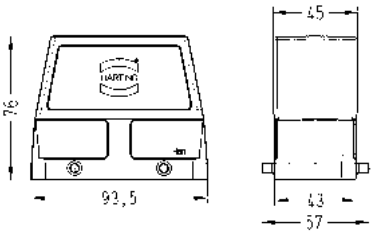

Identification	Cable entry	Part number Low construction	Part number High construction	Drawing (dimensions in mm)
Han® B , Bulkhead mounted housings, Han-Easy Lock® 		09 30 016 0301		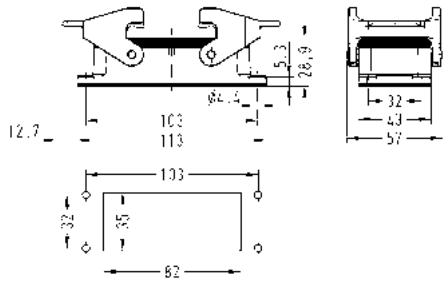 Panel cut out
Han® B , Bulkhead mounted housings, Han-Easy Lock®, IP67 		09 30 016 1301		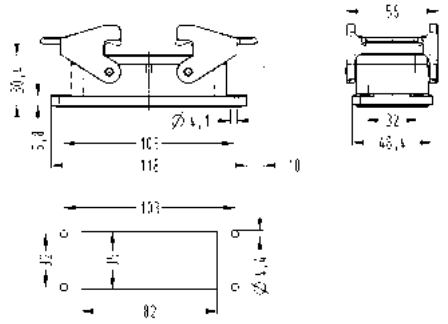 Panel cut out
Han® B , Surface mounted housing, Side entry, Han-Easy Lock® 	1x M25 1x M32 2x M25 2x M32 2x M40	19 30 016 1231 19 30 016 1271	19 30 016 0232 19 30 016 0271 19 30 016 0272 19 30 016 0273	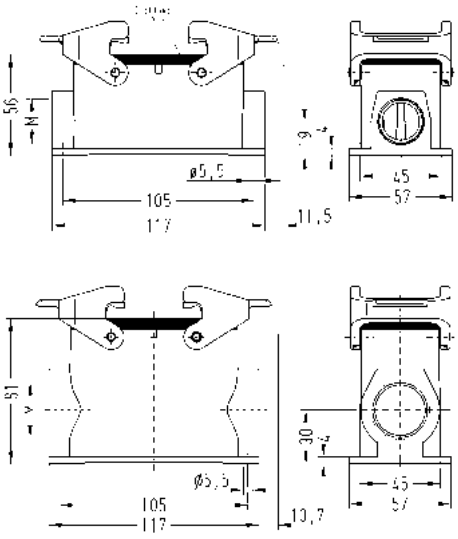

Standard hoods/housings Han® 16 B

Size 16 B

Identification	Cable entry	Part number Low construction	Part number High construction	Drawing (dimensions in mm)
Han® B , Cable to cable housing, Top entry, Han-Easy Lock® 	1x M25 1x M32 1x M40	19 30 016 1731 19 30 016 1732	19 30 016 0736 19 30 016 0737 19 30 016 0738	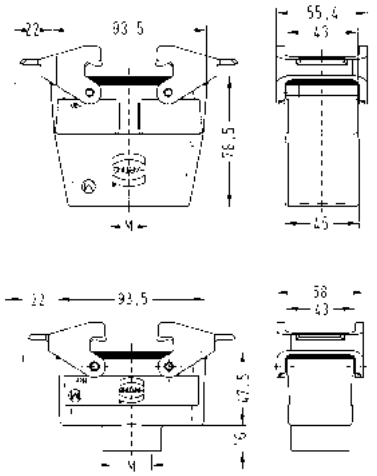
Han® B , Panel feed through housing, Top entry, Han-Easy Lock® 	1x M32 1x M40		19 30 016 1121 19 30 016 1122	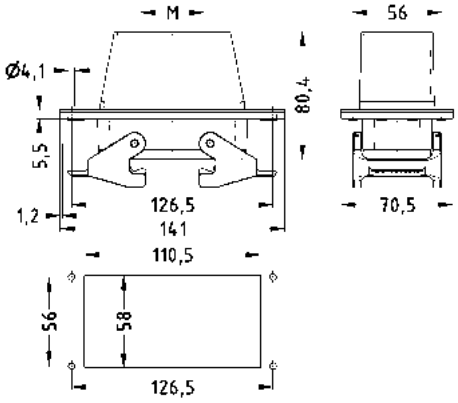 Panel cut out
Han® B , Protection cover, for hoods, Metal, With fixing cord, Han-Easy Lock® 		09 30 016 5422	09 30 016 5422	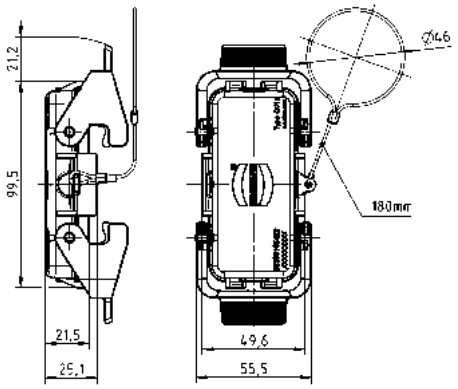

Identification	Cable entry	Part number Low construction	Part number High construction	Drawing (dimensions in mm)
Han® B , Protection cover, for hoods, Metal, With fixing cord 		09 30 016 5426 09 30 016 5457	09 30 016 5426 09 30 016 5457	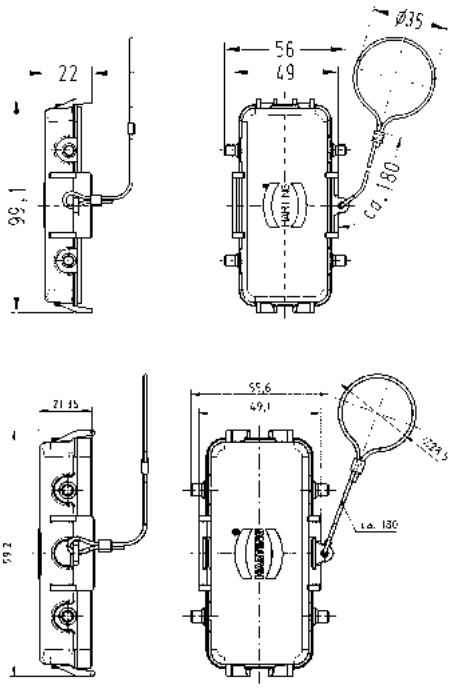
Han® B , Protection cover, for bulkhead mounted housings, for surface mounted housings, Thermoplastic 		09 30 016 5405	09 30 016 5405	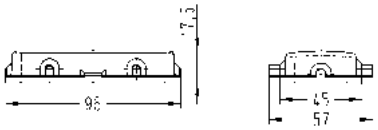
Han® B , Protection cover, for bulkhead mounted housings, for surface mounted housings, Thermoplastic, With fixing cord 		09 30 016 5417	09 30 016 5417	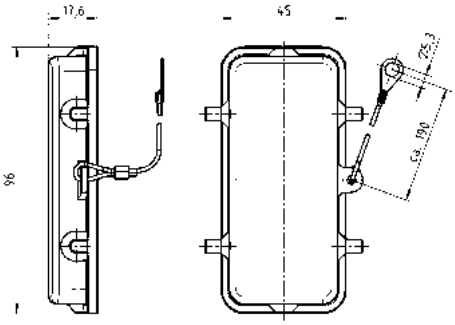
Han® B , Protection cover, for bulkhead mounted housings, for surface mounted housings, Metal, With fixing cord 		09 30 016 5425	09 30 016 5425	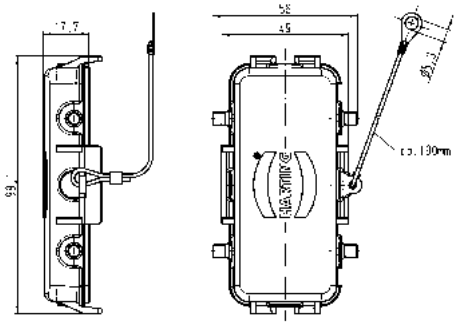

Standard hoods/housings for industrial connectors
Double locking lever (on the hood)

Identification	Cable entry	Part number Low construction	Part number High construction	Drawing (dimensions in mm)
Han® B , Hoods, Top entry, Han-Easy Lock® 	1x M25 1x M32 1x M40	19 30 016 1431 19 30 016 1432	19 30 016 0437 19 30 016 0438	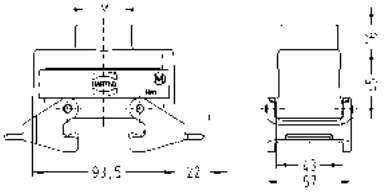 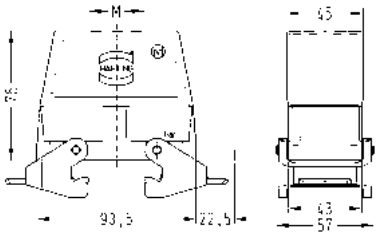
Han® B , Hoods, Flat cable entry, Top entry, Han-Easy Lock® 			09 30 016 4431	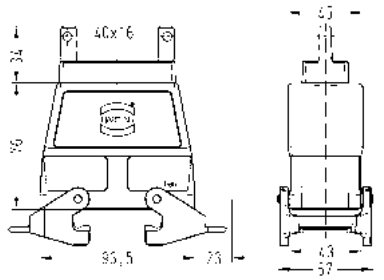
Han® B , Hoods, Side entry, Han-Easy Lock® 	1x M25 1x M32 1x M40	19 30 016 1531	19 30 016 0537 19 30 016 0538	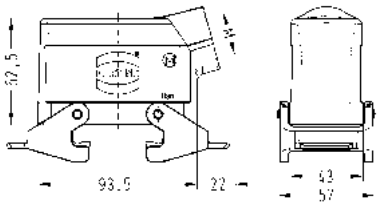 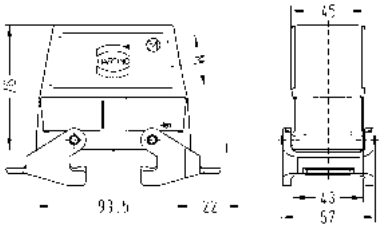

Identification	Cable entry	Part number Low construction	Part number High construction	Drawing (dimensions in mm)
Han® B , Bulkhead mounted housings, With thermo-plastic cover 		09 30 016 0302		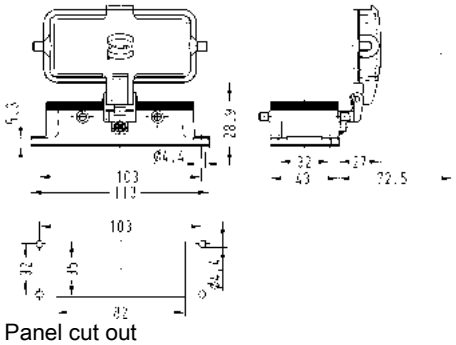 Panel cut out
Han® B , Bulkhead mounted housings, With metal cover 		09 30 016 0317		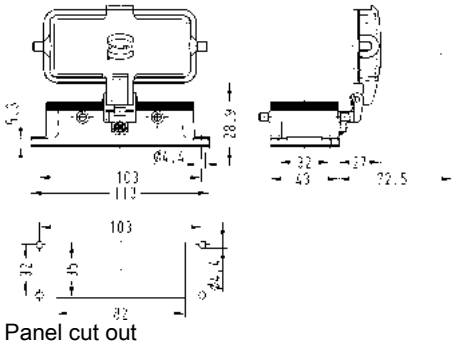 Panel cut out
Han® B , Surface mounted housing, With thermo-plastic cover, Side entry 	1x M25 2x M25 2x M32	19 30 016 1226 19 30 016 1266	19 30 016 0267	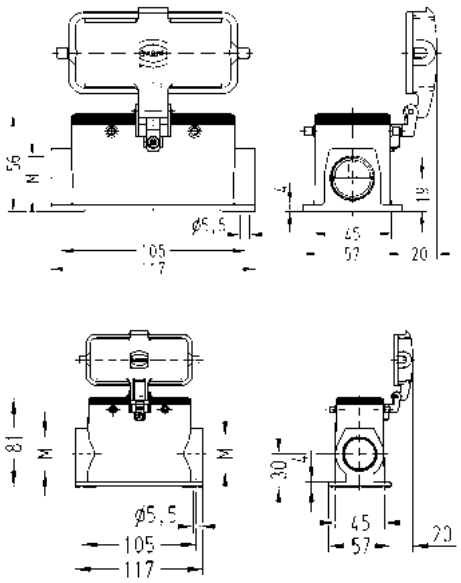

Standard hoods/housings Han® 16 B

Size 16 B

Standard hoods/housings for industrial connectors
Single locking lever

Identification	Cable entry	Part number Low construction	Part number High construction	Drawing (dimensions in mm)
Han® B , Hoods, Top entry 	1x M25 1x M32 1x M40 2x M25	19 30 016 1441 19 30 016 1442	19 30 016 0446 19 30 016 0447 19 30 016 0448 19 30 016 0456	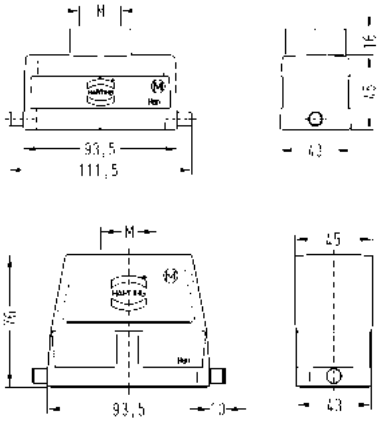
Han® B , Hoods, Flat cable entry, Top entry 			09 30 016 4411	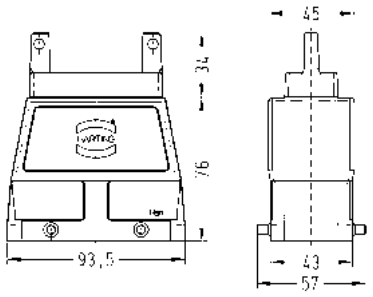
Han® B , Hoods, Side entry 	1x M25 1x M32 1x M40	19 30 016 1541 19 30 016 1542	19 30 016 0547 19 30 016 0548	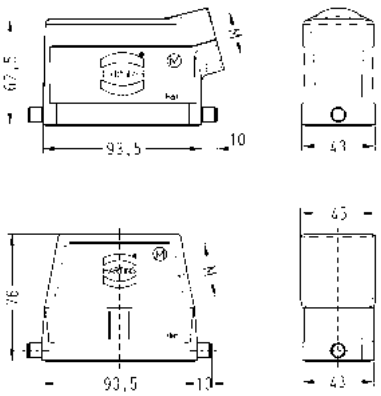

Identification	Cable entry	Part number Low construction	Part number High construction	Drawing (dimensions in mm)
Han® B , Hoods, Without cable entry 			09 30 016 0803	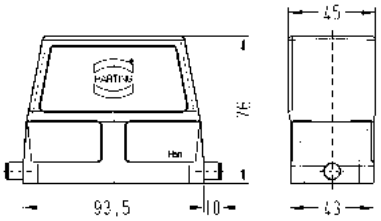
Han® B , Bulkhead mounted housings, Han-Easy Lock® 		09 30 016 0307 09 30 016 1307		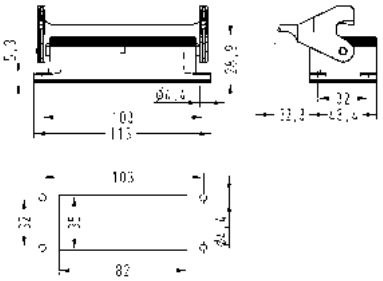 Panel cut out
Han® B , Bulkhead mounted housings, With thermo-plastic cover, Han-Easy Lock® 		09 30 016 0306		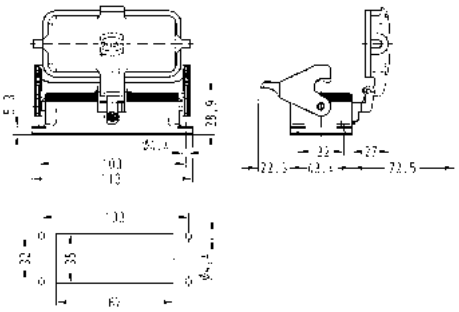 Panel cut out
Han® B , Bulkhead mounted housings, With metal cover, Han-Easy Lock® 		09 30 016 0318		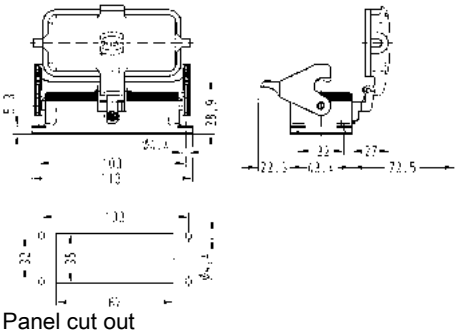 Panel cut out

Standard hoods/housings Han® 16 B

Size 16 B

Identification	Cable entry	Part number Low construction	Part number High construction	Drawing (dimensions in mm)
Han® B , Bulkhead mounted housings, With self-closing cover, Han-Easy Lock® 		09 30 016 1306		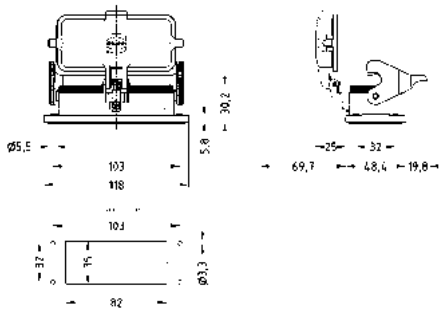 Panel cut out
Han® B , Surface mounted housing, Side entry, Han-Easy Lock® 	1x M25 1x M32 2x M25 2x M32	19 30 016 1251 19 30 016 1291	19 30 016 0252 19 30 016 0291 19 30 016 0292	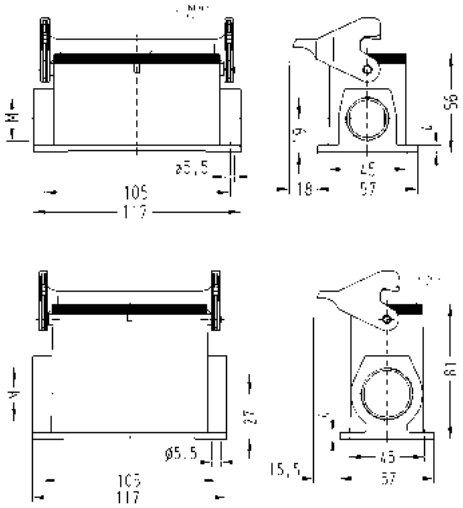
Han® B , Surface mounted housing, With thermo-plastic cover, Side entry, Han-Easy Lock® 	1x M25 2x M25 2x M32	19 30 016 1256 19 30 016 1296	19 30 016 0297	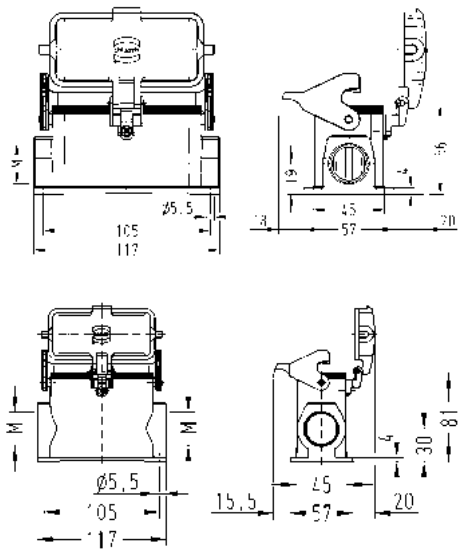

Identification	Cable entry	Part number Low construction	Part number High construction	Drawing (dimensions in mm)
Han® B , Surface mounted housing, With metal cover, Side entry, Han-Easy Lock® 	2x M25 2x M32	19 30 016 2296	19 30 016 7297	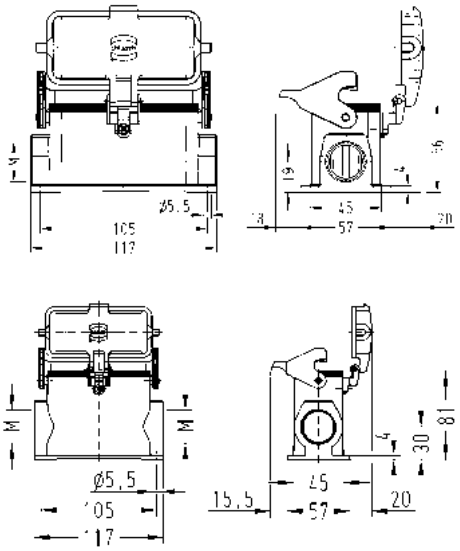
Han® B , Cable to cable housing, Top entry, Han-Easy Lock® 	1x M25 1x M32	19 30 016 1751 19 30 016 1752	19 30 016 0757	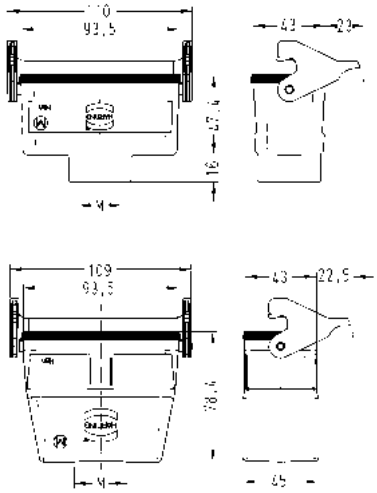
Han® B , Panel feed through housing, Top entry, Han-Easy Lock® 	1x M32 1x M40		19 30 016 1131 19 30 016 1132	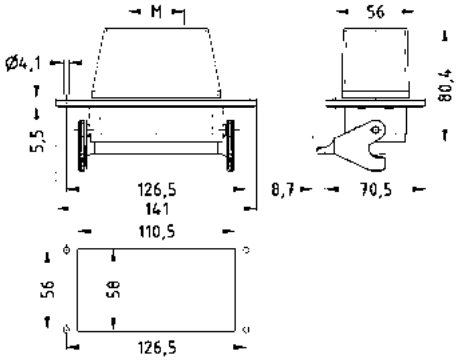 Panel cut out

Identification	Cable entry	Part number Low construction	Part number High construction	Drawing (dimensions in mm)
Han® B , Protection cover, for hoods, Metal, Han-Easy Lock® 		09 30 016 5432	09 30 016 5432	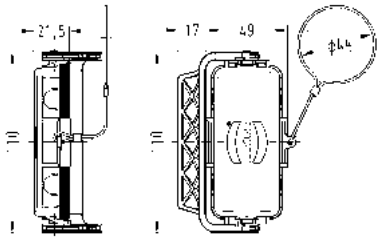

Standard hoods/housings for industrial connectors
Central locking lever (on the hood)

Identification	Cable entry	Part number Low construction	Part number High construction	Drawing (dimensions in mm)
Han® B , Hoods, Top entry 	1x M32		19 30 016 0487	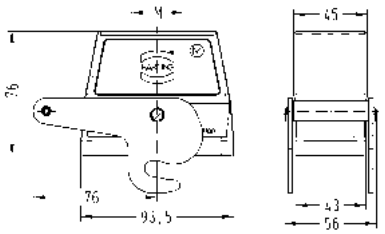
Han® B , Hoods, Side entry 	1x M25 1x M32		19 30 016 0586 19 30 016 0587	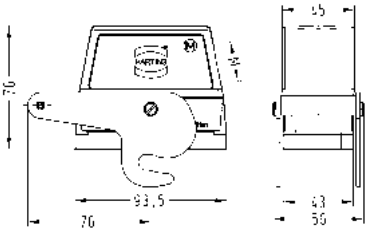
Han® B , Bulkhead mounted housings 		09 30 016 0381		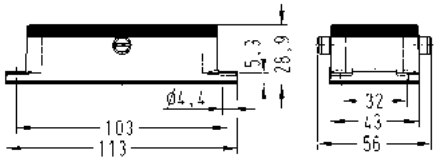 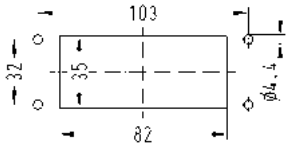 Panel cut out
Han® B , Surface mounted housing, Side entry 	2x M32		19 30 016 0282	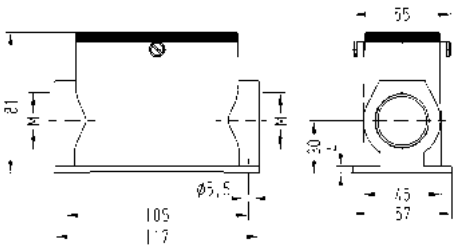

Identification	Cable entry	Part number Low construction	Part number High construction	Drawing (dimensions in mm)
Han® B , Panel feed through housing, Top entry 	1x M32 1x M40		19 30 016 1141 19 30 016 1142	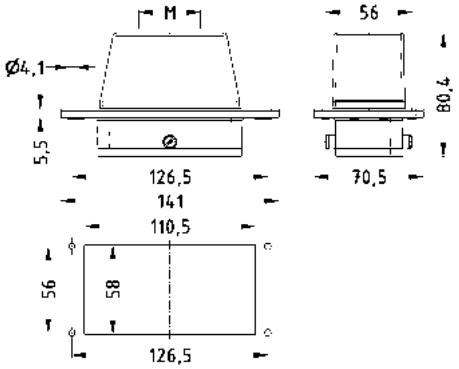 Panel cut out

Standard hoods/housings for industrial connectors
Double locking lever

Identification	Cable entry	Part number Low construction	Part number High construction	Drawing (dimensions in mm)
Han® B , Hoods, Top entry 	1x M32 1x M40 2x M25 2x M32	19 30 024 1422	19 30 024 0427 19 30 024 0428 19 30 024 0466 19 30 024 0467	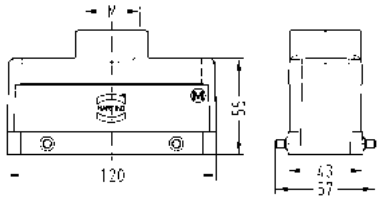 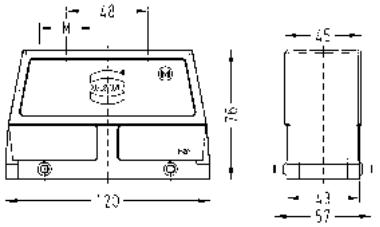
Han® B , Hoods, Special type, Top entry 	1x M50		19 30 024 0429	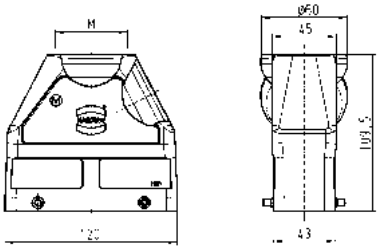
Han® B , Hoods, Flat cable entry, Top entry 			09 30 024 4411	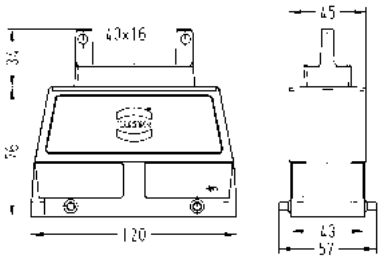

Standard hoods/housings Han® 24 B

Size 24 B

Identification	Cable entry	Part number Low construction	Part number High construction	Drawing (dimensions in mm)
Han® B , Hoods, Side entry 	1x M25 1x M32 1x M40 1x M40	19 30 024 1521 19 30 024 1522	19 30 024 0527 19 30 024 0523 19 30 024 0528	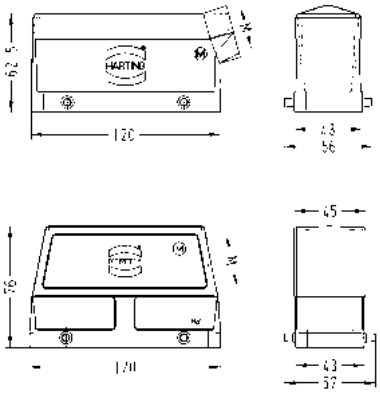
Han® B , Hoods, Special type, Side entry 	1x M50		19 30 024 0529	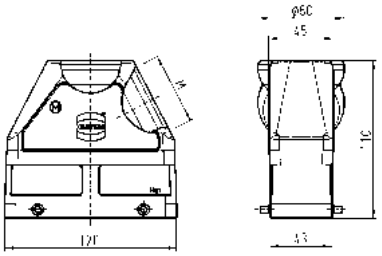
Han® B , Hoods, Angled entry 	2x M25		19 30 024 0666	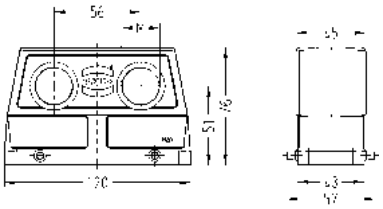
Han® B , Hoods, Without cable entry 			09 30 024 0801	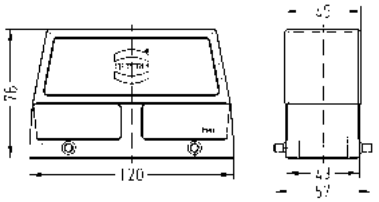
Han® B , Bulkhead mounted housings, Han-Easy Lock® 		09 30 024 0301		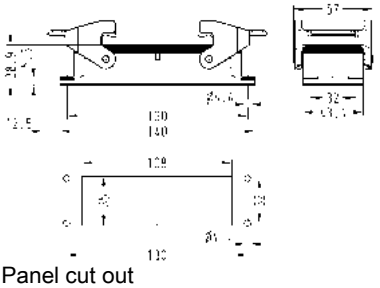 Panel cut out

Standard hoods/housings Han® 24 B

Size 24 B

Identification	Cable entry	Part number Low construction	Part number High construction	Drawing (dimensions in mm)
Han® B , Bulkhead mounted housings, Han-Easy Lock®, IP67 		09 30 024 1301		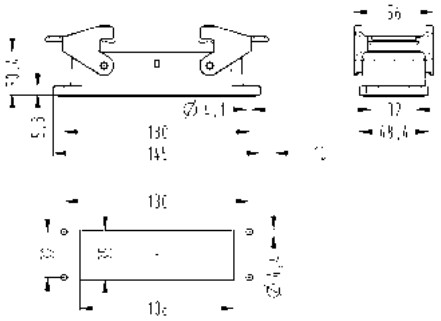 Panel cut out
Han® B , Surface mounted housing, Side entry, Han-Easy Lock® 	1x M25 1x M32 2x M25 2x M32 2x M40	19 30 024 1231 19 30 024 1271	19 30 024 0232 19 30 024 0272 19 30 024 0273	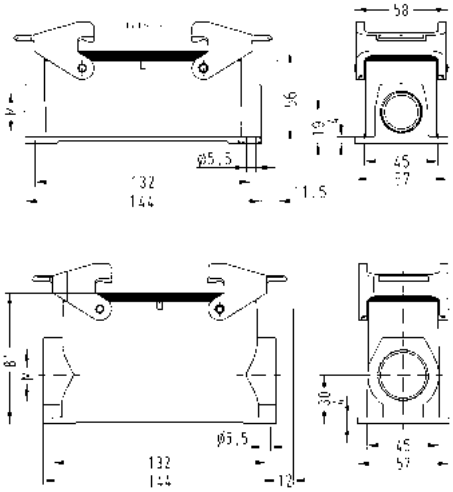
Han® B , Cable to cable housing, Top entry, Han-Easy Lock® 	1x M32 1x M40	19 30 024 1732	19 30 024 0737 19 30 024 0738	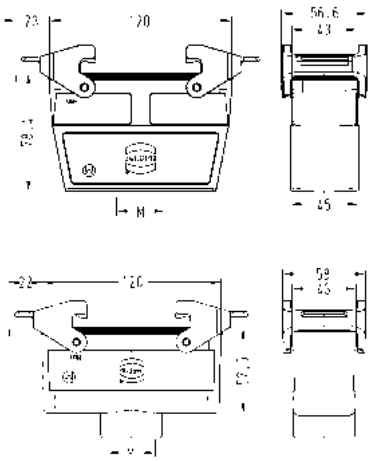

Standard hoods/housings Han® 24 B

Size 24 B

Identification	Cable entry	Part number Low construction	Part number High construction	Drawing (dimensions in mm)
Han® B , Panel feed through housing, Top entry, Han-Easy Lock® 	1x M32 1x M40		19 30 024 1121 19 30 024 1122	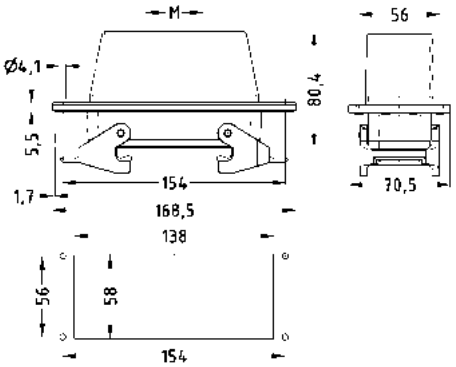 Panel cut out
Han® B , Protection cover, for hoods, Thermoplastic, With board locks 		09 30 024 5401	09 30 024 5401	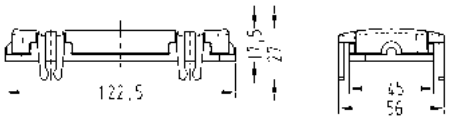
Han® B , Protection cover, for hoods, Metal, With fixing cord, Han-Easy Lock® 		09 30 024 5422	09 30 024 5422	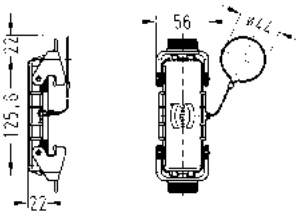
Han® B , Protection cover, for bulkhead mounted housings, for surface mounted housings, Thermoplastic 		09 30 024 5405	09 30 024 5405	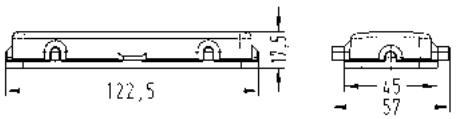
Han® B , Protection cover, for bulkhead mounted housings, for surface mounted housings, Metal, With fixing cord 		09 30 024 5425	09 30 024 5425	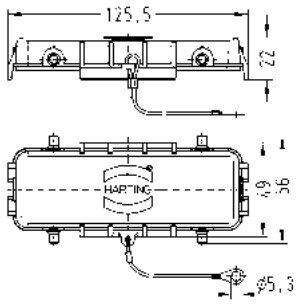

Identification	Cable entry	Part number Low construction	Part number High construction	Drawing (dimensions in mm)
Han® B , Protection cover, for cable to cable housing, Metal, With fixing cord 		09 30 024 5426	09 30 024 5426	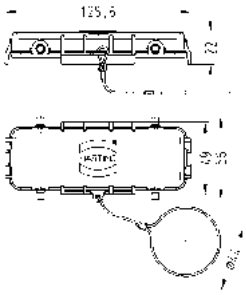

Standard hoods/housings Han® 24 B

Size 24 B

Standard hoods/housings for industrial connectors
Double locking lever (on the hood)

Identification	Cable entry	Part number Low construction	Part number High construction	Drawing (dimensions in mm)
Han® B , Hoods, Top entry, Han-Easy Lock® 	1x M32 1x M40	19 30 024 1432	19 30 024 0437 19 30 024 0438	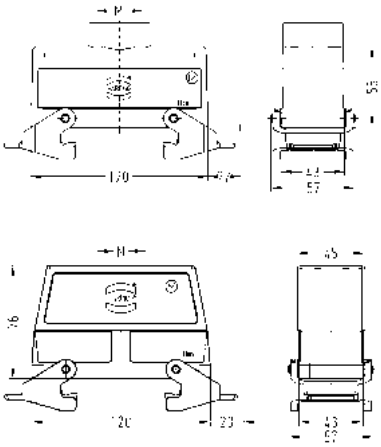
Han® B , Hoods, Side entry, Han-Easy Lock® 	1x M25 1x M32 1x M40	19 30 024 1531	19 30 024 0537 19 30 024 0538	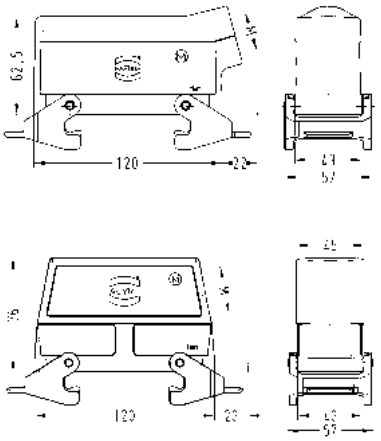
Han® B , Bulkhead mounted housings, With thermo-plastic cover 		09 30 024 0302		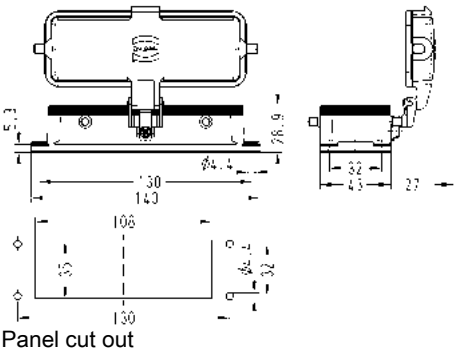 Panel cut out

Identification	Cable entry	Part number Low construction	Part number High construction	Drawing (dimensions in mm)
Han® B , Bulkhead mounted housings, With metal cover 		09 30 024 0317		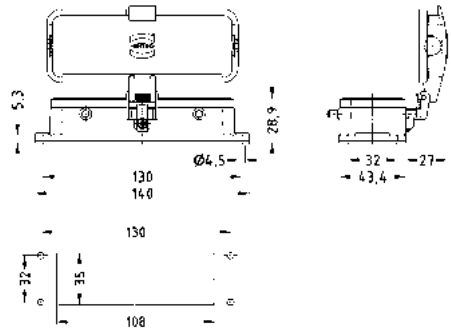 Panel cut out
Han® B , Surface mounted housing, With thermo-plastic cover, Side entry 	1x M25 2x M25 2x M32	19 30 024 1226 19 30 024 1266	19 30 024 0267	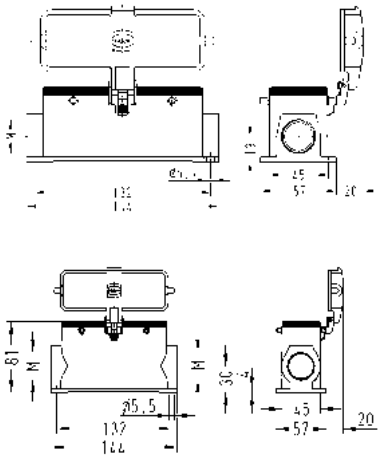
Han® B , Protection cover, for hoods, Metal, With fixing cord 		09 30 024 5442	09 30 024 5442	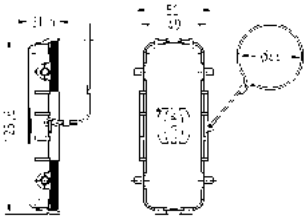

Standard hoods/housings for industrial connectors
Single locking lever

Identification	Cable entry	Part number Low construction	Part number High construction	Drawing (dimensions in mm)
Han® B , Hoods, Top entry 	1x M32 1x M40 2x M25 2x M32	19 30 024 1442	19 30 024 0447 19 30 024 0448 19 30 024 0456 19 30 024 0457	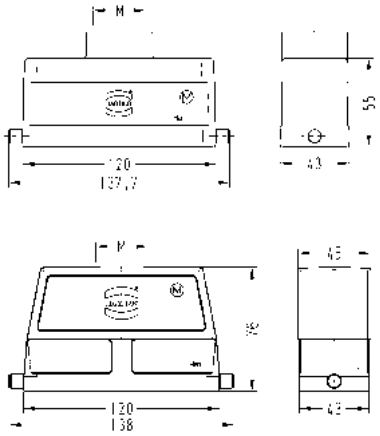
Han® B , Hoods, Side entry 	1x M25 1x M32 1x M40	19 30 024 1541 19 30 024 1542	19 30 024 0547 19 30 024 0548	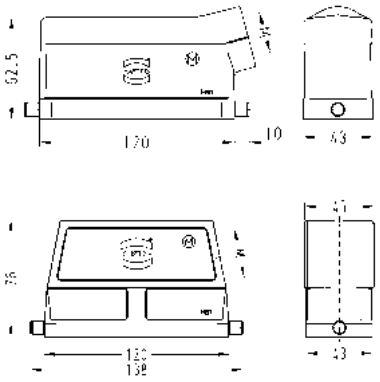
Han® B , Hoods, Without cable entry 			09 30 024 0803	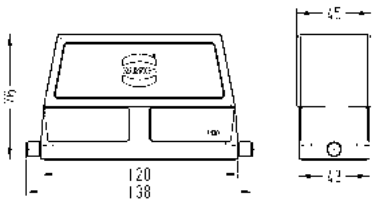

Identification	Cable entry	Part number Low construction	Part number High construction	Drawing (dimensions in mm)
Han® B , Bulkhead mounted housings, Han-Easy Lock® 		09 30 024 0307 09 30 024 1307		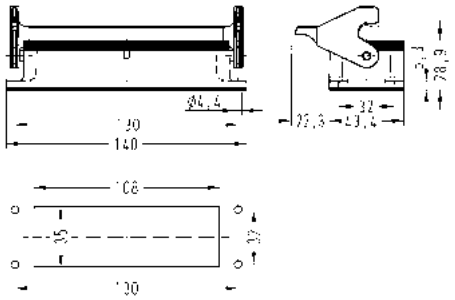 Panel cut out
Han® B , Bulkhead mounted housings, With thermo-plastic cover, Han-Easy Lock® 		09 30 024 0304		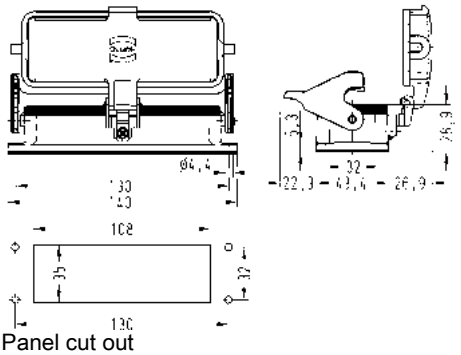 Panel cut out
Han® B , Bulkhead mounted housings, With metal cover, Han-Easy Lock® 		09 30 024 0318		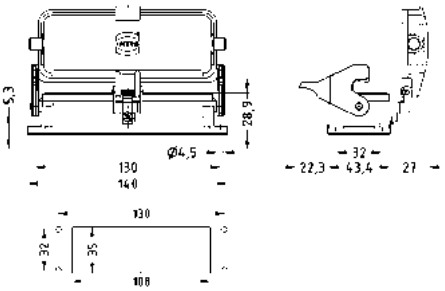 Panel cut out
Han® B , Bulkhead mounted housings, With self-closing cover, Han-Easy Lock® 		09 30 024 1306		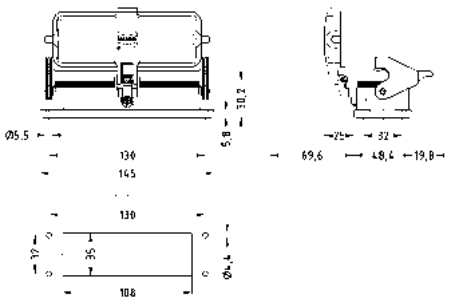 Panel cut out

Standard hoods/housings Han® 24 B

Size 24 B

Identification	Cable entry	Part number Low construction	Part number High construction	Drawing (dimensions in mm)
Han® B , Surface mounted housing, Side entry, Han-Easy Lock® 	1x M25 2x M25 2x M32	19 30 024 1251 19 30 024 1291	19 30 024 0292	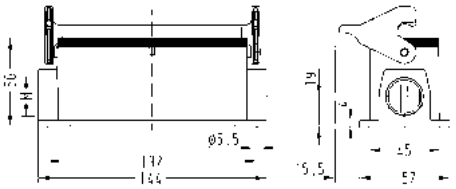 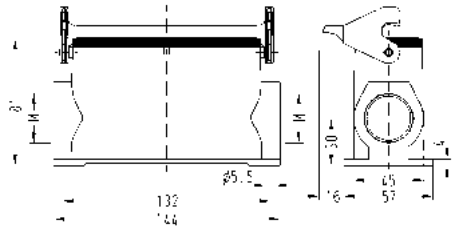
Han® B , Surface mounted housing, With thermo-plastic cover, Side entry, Han-Easy Lock® 	1x M25 2x M25 2x M32	19 30 024 1256 19 30 024 1296	19 30 024 0297	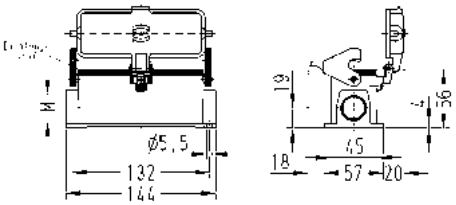 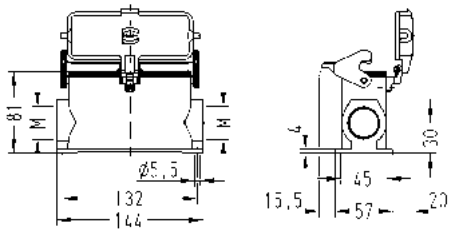
Han® B , Surface mounted housing, With metal cover, Side entry, Han-Easy Lock® 	2x M25 2x M32	19 30 024 2296	19 30 024 7297	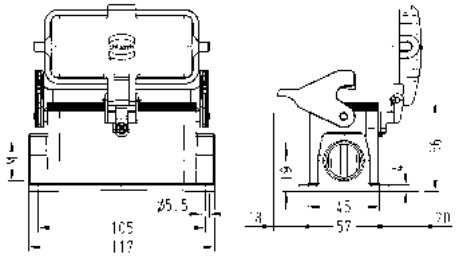

Identification	Cable entry	Part number Low construction	Part number High construction	Drawing (dimensions in mm)
Han® B , Cable to cable housing, Top entry, Han-Easy Lock® 	1x M32	19 30 024 1752	19 30 024 0757	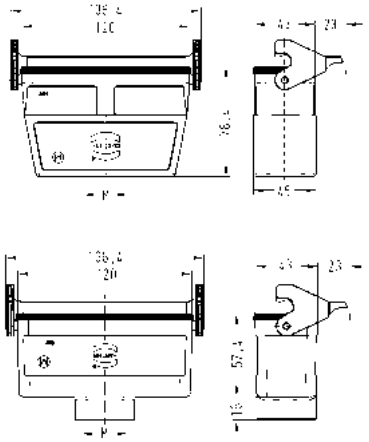
Han® B , Panel feed through housing, Top entry, Han-Easy Lock® 	1x M32 1x M40		19 30 024 1131 19 30 024 1132	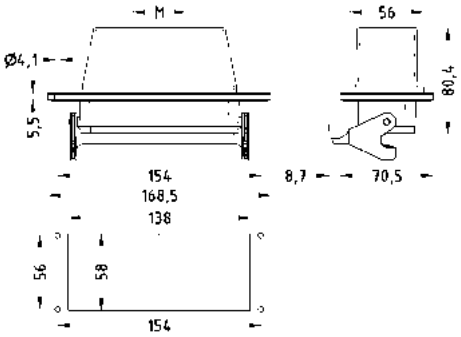 Panel cut out
Han® B , Protection cover, for hoods, Metal, With fixing cord, Han-Easy Lock® 		09 30 024 5432	09 30 024 5432	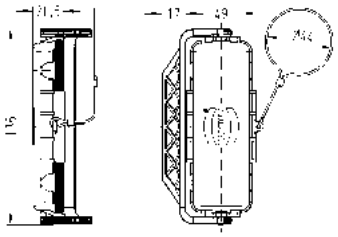
Han® B , Protection cover, for cable to cable housing, Metal, With fixing cord 		09 30 024 5436	09 30 024 5436	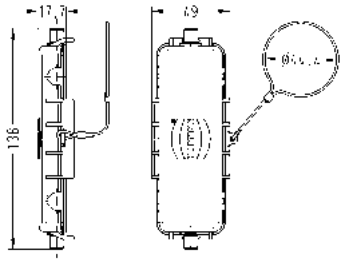

Standard hoods/housings Han® 24 B

Size 24 B

Standard hoods/housings for industrial connectors
Central locking lever (on the hood)

Identification	Cable entry	Part number Low construction	Part number High construction	Drawing (dimensions in mm)
Han® B , Hoods, Top entry 	1x M32		19 30 024 0487	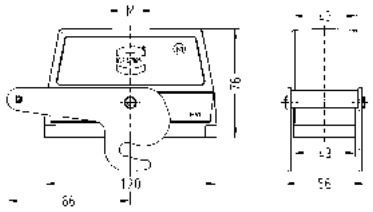
Han® B , Hoods, Side entry 	1x M25 1x M32 1x M40		19 30 024 0586 19 30 024 0587 19 30 024 0588	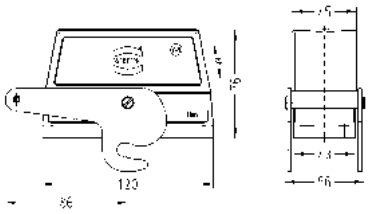
Han® B , Bulkhead mounted housings 		09 30 024 0381		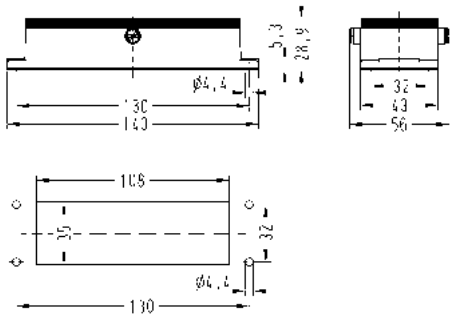 Panel cut out
Han® B , Surface mounted housing, Side entry 	2x M32		19 30 024 0282	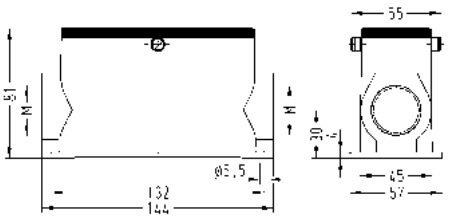

Identification	Cable entry	Part number Low construction	Part number High construction	Drawing (dimensions in mm)
Han® B , Panel feed through housing, Top entry 	1x M32 1x M40		19 30 024 1141 19 30 024 1142	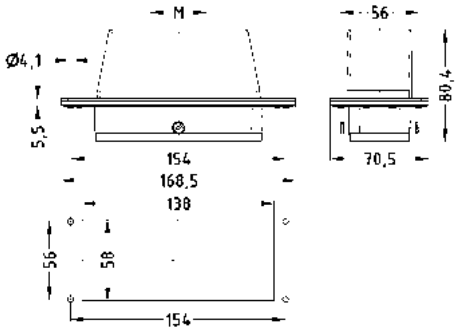 Panel cut out

Standard hoods/housings for industrial connectors
Double locking lever

Identification	Cable entry	Part number Low construction	Part number High construction	Drawing (dimensions in mm)
Han® B , Hoods, Top entry 	1x M32 1x M40 1x M50		19 30 032 0427 19 30 032 0428 19 30 032 0429	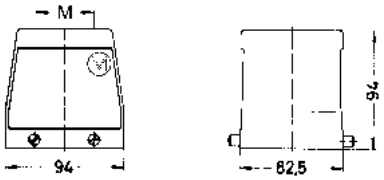
Han® B , Hoods, Side entry 	1x M32 1x M40 1x M50		19 30 032 0527 19 30 032 0528 19 30 032 0529	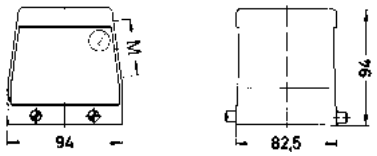
Han® B , Bulkhead mounted housings, Han-Easy Lock® 		09 30 032 0301		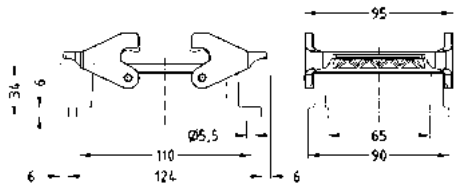 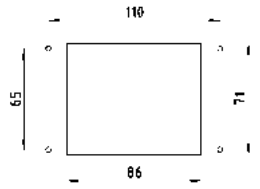 Panel cut out
Han® B , Surface mounted housing, Side entry, Han-Easy Lock® 	1x M32 2x M32 2x M40		19 30 032 0232 19 30 032 0272 19 30 032 0273	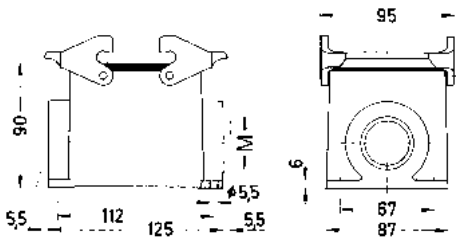

Identification	Cable entry	Part number Low construction	Part number High construction	Drawing (dimensions in mm)
Han® B , Cable to cable housing, Top entry, Han-Easy Lock® 	1x M40		19 30 032 0738	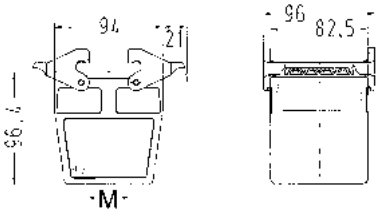
Han® B , Protection cover, for hoods, Metal, With fixing cord 		09 30 032 5420	09 30 032 5420	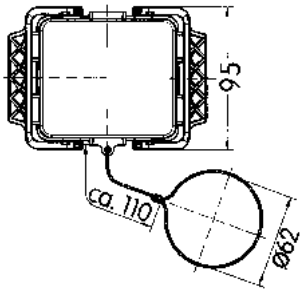
Han® B , Protection cover, for bulkhead mounted housings, for surface mounted housings, Thermoplastic 		09 30 032 5405	09 30 032 5405	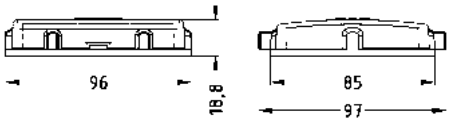
Han® B , Protection cover, for bulkhead mounted housings, for surface mounted housings, Thermoplastic, With fixing cord 		09 30 032 5406	09 30 032 5406	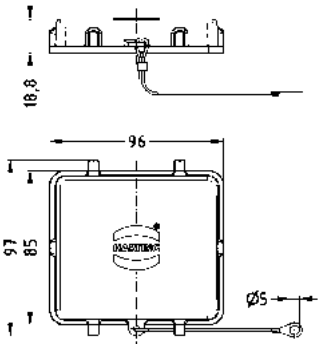
Han® B , Protection cover, for bulkhead mounted housings, for surface mounted housings, Metal, With fixing cord 		09 30 032 5425	09 30 032 5425	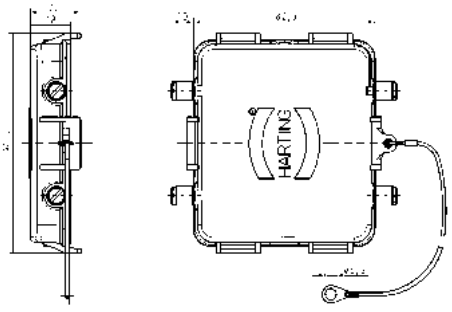

Identification	Cable entry	Part number Low construction	Part number High construction	Drawing (dimensions in mm)
Han® B , Protection cover, for cable to cable housing, Metal, With fixing cord 		09 30 032 5426 09 30 032 5427	09 30 032 5426 09 30 032 5427	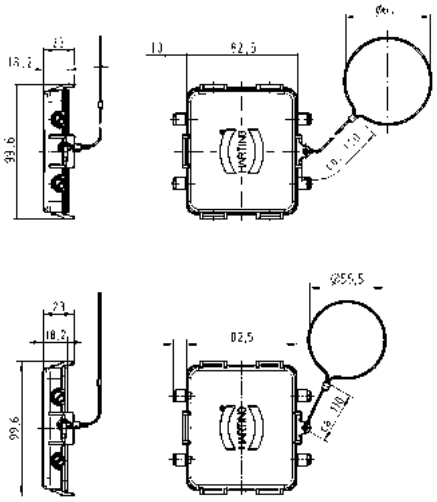

Standard hoods/housings for industrial connectors
Single locking lever

Identification	Cable entry	Part number Low construction	Part number High construction	Drawing (dimensions in mm)
Han® B , Hoods, Top entry 	1x M40 1x M50 1x M63		19 30 048 0448 19 30 048 0449 19 30 048 0450	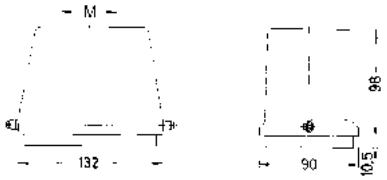
Han® B , Hoods, Side entry 	1x M40 1x M50		19 30 048 0548 19 30 048 0549	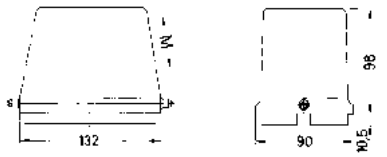
Han® B , Hoods, Top/side entry 	1x M50, 1x M50		19 30 048 0599	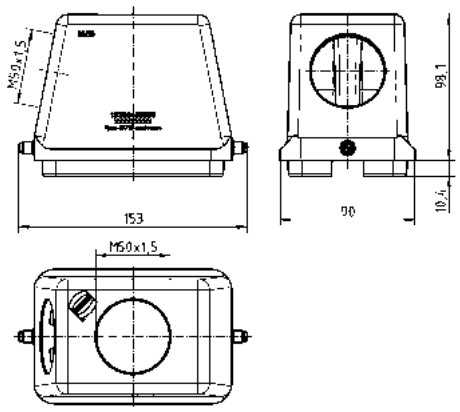
Han® B , Bulkhead mounted housings 		09 30 048 0302		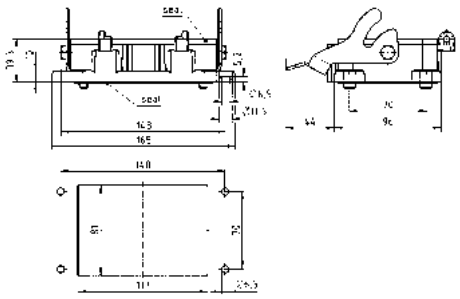 Panel cut out

Standard hoods/housings Han® 48 B

Size 48 B

Identification	Cable entry	Part number Low construction	Part number High construction	Drawing (dimensions in mm)
Han® B , Bulkhead mounted housings, With thermo-plastic cover 		09 30 048 0301		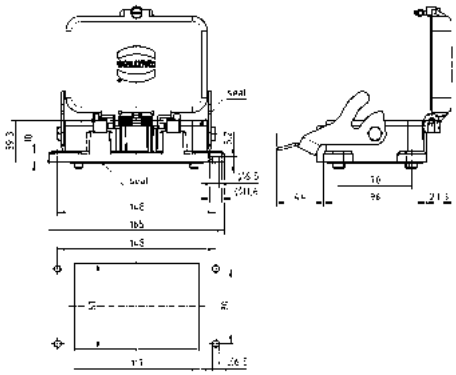 Panel cut out
Han® B , Bulkhead mounted housings, With metal cover 		09 30 048 0317		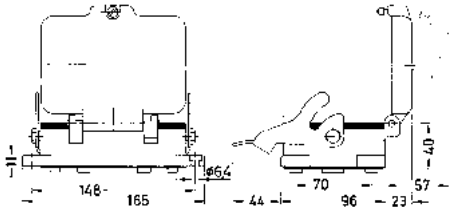 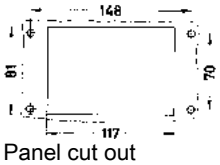 Panel cut out
Han® B , Surface mounted housing, Side entry 	2x M32 2x M40		19 30 048 0292 19 30 048 0293	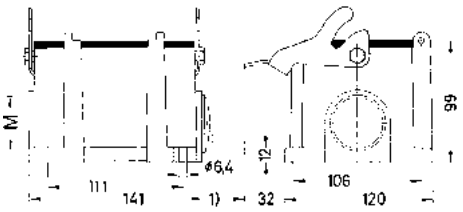
Han® B , Surface mounted housing, With thermo-plastic cover, Side entry 	2x M40		19 30 048 0298	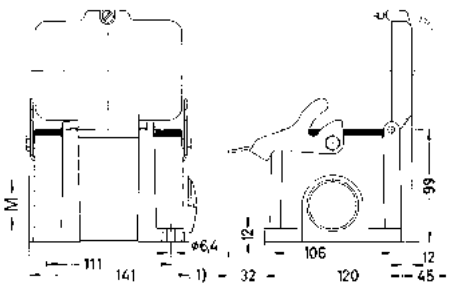

Han® Easy Hood hoods/housings

Features

- Hoods/housings for industrial applications

Technical characteristics

Limiting temperature	-40 ... +125 °C
Degree of protection acc. to IEC 60529	IP65
Type rating acc. to UL 50 / UL 50E	4, 4X, 12
Material (hood/housing)	Aluminium die-cast
Surface (hood/housing)	Powder-coated
Colour (hood/housing)	RAL 7037 (dust grey)
Material (seal)	NBR
Material (locking)	Polycarbonate, Stainless steel
Colour (locking)	RAL 7037 (dust grey)
RoHS	compliant

Specifications and approvals

DNV GL

Double locking lever

Identification	Cable entry	Cable diameter (mm)	Part number	Drawing (dimensions in mm)
Han® Easy Hood , Hoods, Side entry 	1x Integrated	20 ... 34	11 30 016 0520	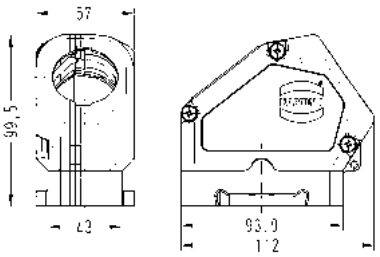
Han® Easy Hood , Protection cover, for hoods, Metal, With fixing cord, Han-Easy Lock® 			11 30 016 5422	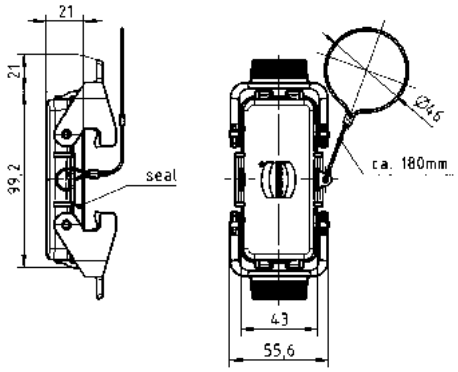

Double locking lever

Identification	Cable entry	Cable diameter (mm)	Part number	Drawing (dimensions in mm)
Han® Easy Hood , Hoods, Side entry 	1x Integrated	20 ... 34	11 30 024 0520	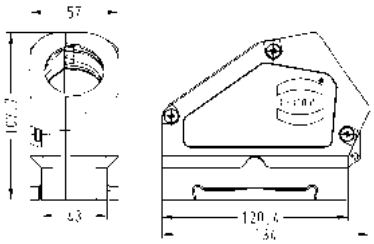
Han® Easy Hood , Protection cover, for hoods, Metal, With fixing cord 			11 30 024 5422	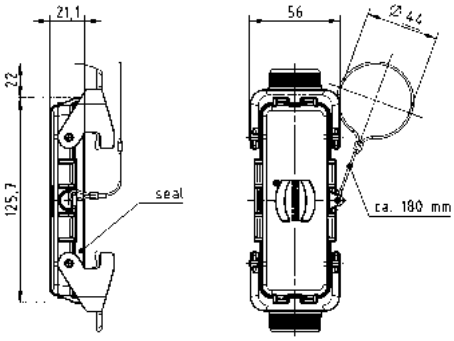

Technical characteristics

Material (cable glands)	Thermoplastic
Material (accessories)	Thermoplastic

Technical characteristics

Colour (accessories)	Black
RoHS	compliant

Identification	Size	Clamping range (mm)	Part number	Drawing (dimensions in mm)
Cable seal, Han® Easy Hood 		20 ... 22 23 ... 25 26 ... 28 29 ... 31 32 ... 34	11 30 000 9955 11 30 000 9956 11 30 000 9957 11 30 000 9958 11 30 000 9959	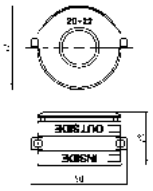
Han® Easy Hood , Thread adapter 	M25 M32		11 30 000 9961 11 30 000 9962	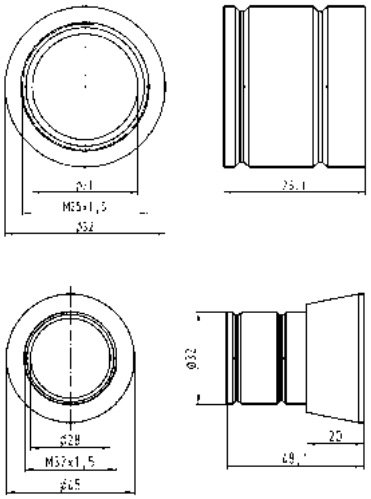

Features

- Angled housing replaces the terminal box
- Compact design saves space
- The position of the terminal housing can be switched by 90°
- Compatible with standard hoods for single lever size 10 B
- Locking levers: Han-Easy Lock®
- Star and delta circuits can be realised in the female connector Han® ESS
- Suitable for standard inserts

Technical characteristics

Limiting temperature	-40 ... +125 °C
Degree of protection acc. to IEC 60529	IP65
Type rating acc. to UL 50 / UL 50E	4, 4X, 12
Material (hood/housing)	Aluminium die-cast
Surface (hood/housing)	Uncoated, Powder-coated
Colour (hood/housing)	RAL 7037 (dust grey)
Material (seal)	NBR
Material (locking)	Polycarbonate, Stainless steel
Colour (locking)	RAL 7037 (dust grey)
Material flammability class acc. to UL 94 (locking levers)	V-0
RoHS	compliant

Specifications and approvals

DNV GL

Single locking lever

Identification	Part number	Drawing (dimensions in mm)
Han-Drive® , Housing for motor applications, Han-Easy Lock® 	09 30 410 0901 09 30 410 0909 09 30 410 0921	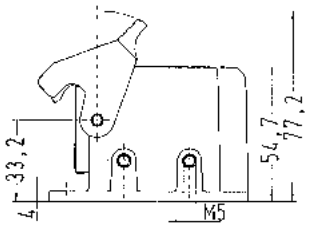
Han-Drive® , Housing for motor applications, With thermo-plastic cover, Han-Easy Lock® 	09 30 410 0951 09 30 410 0960 09 30 410 0970 09 30 410 0971 09 30 410 0974 09 30 410 0983	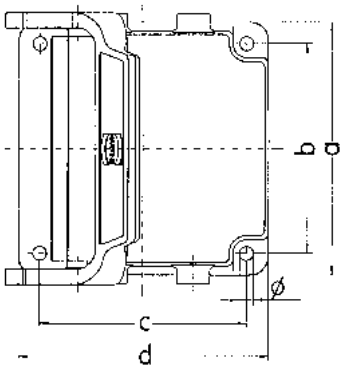
Han-Drive® , Housing for motor applications, Powder-coated, Han-Easy Lock® 	09 30 010 0901 09 30 010 0902	
Han-Drive® , Housing for motor applications, Powder-coated, With thermo-plastic cover, Han-Easy Lock® 	09 30 010 0961	

	a	b	c	d	Ø
09 30 010 0901	82	68	68	82	4,5
09 30 010 0902	98			98	
09 30 010 0961	82	70	70	82	
09 30 410 0901	82	68	68	82	4,5
09 30 410 0909	98			98	
09 30 410 0921	85	73	73	85	
09 30 410 0951	82	68	68	82	4,5
09 30 410 0960	98	70	70	98	4,3
09 30 410 0970	92	77	77	92	4,3
09 30 410 0971	85	73	73	85	5,5
09 30 410 0974	92	70	70	92	4,3
09 30 410 0983	92	80	80	92	5,1
09 62 810 0901	82	68	68	82	4,5
09 62 810 0974	92	70	70	92	4,1

Single locking lever

Identification	Part number	Drawing (dimensions in mm)
Han-Drive® , Housing for motor applications, EMC version, Han-Easy Lock® 	09 62 810 0901	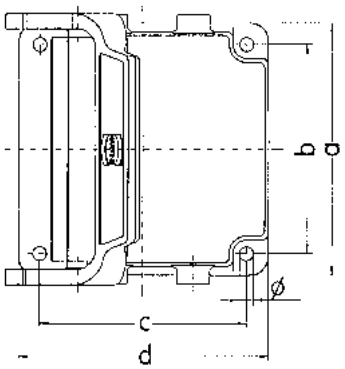
Han-Drive® , Housing for motor applications, EMC version, With thermo-plastic cover, Han-Easy Lock® 	09 62 810 0974	

	a	b	c	d	ø
09 30 010 0901	82	68	68	82	4,5
09 30 010 0902	98			98	
09 30 010 0961	82	70	70	82	
09 30 410 0901	82	68	68	82	4,5
09 30 410 0909	98			98	
09 30 410 0921	85	73	73	85	
09 30 410 0951	82	68	68	82	4,5
09 30 410 0960	98	70	70	98	4,3
09 30 410 0970	92	77	77	92	4,3
09 30 410 0971	85	73	73	85	5,5
09 30 410 0974	92	70	70	92	4,3
09 30 410 0983	92	80	80	92	5,1
09 62 810 0901	82	68	68	82	4,5
09 62 810 0974	92	70	70	92	4,1

Features

- Hoods/housings for rough environments
- Metal hoods and housings with excellent corrosion resistance
- Corrosion resistance ASTM B117-09 (500 h)
- Locking lever made of high-quality stainless steel

Technical characteristics

Limiting temperature	-40 ... +125 °C
Degree of protection acc. to IEC 60529	IP44, IP65 / IP67, with seal screw 09 20 000 9918
Material (hood/housing)	Zinc die-cast
Surface (hood/housing)	Powder-coated
Colour (hood/housing)	RAL 9005 (jet black)
Material (seal)	FPM
Material (locking)	Stainless steel
RoHS	compliant, compliant with exemption
RoHS exemptions	**6c:** Copper alloy containing up to 4 % lead by weight

Specifications and approvals

DNV GL

Han® 3 M hoods/housings

Size 3 A

Hoods/housings for rough environments
Single locking lever

Identification	Cable entry	Part number	Drawing (dimensions in mm)
Han® M , Hoods, Top entry 	1x M20 1x M25	19 37 003 1440 19 37 003 1445	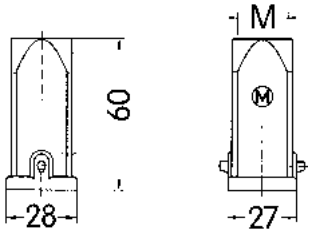
Han® M , Hoods, Side entry 	1x M20	19 37 003 1640	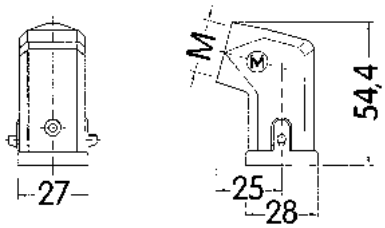
Han® M , Screw mounted housings 	1x M20	19 37 003 1150	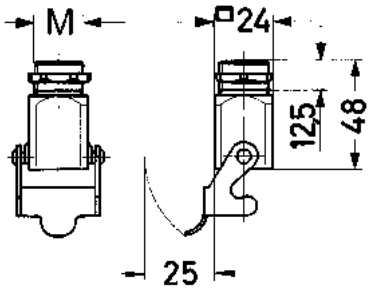

Han® 3 M hoods/housings

Size 3 A

Identification	Cable entry	Part number	Drawing (dimensions in mm)
Han® M , Screw mounted housings, Angled 	1x M20 1x M25	19 37 003 1160 19 37 003 1165	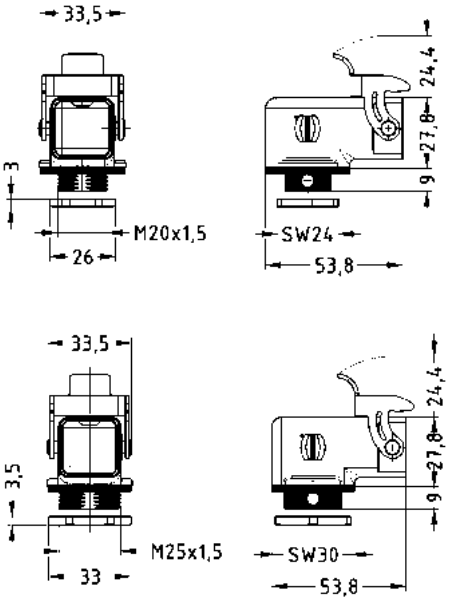
Han® M , Bulkhead mounted housings, Straight 		09 37 003 0301	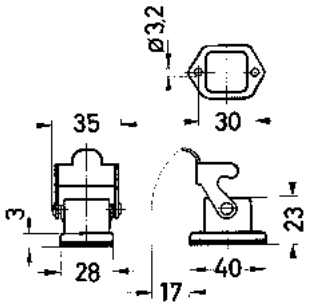 Panel cut out 22 x 22 mm
Han® M , Bulkhead mounted housings, Straight, With metal cover, With seal  for male inserts		09 37 003 0305	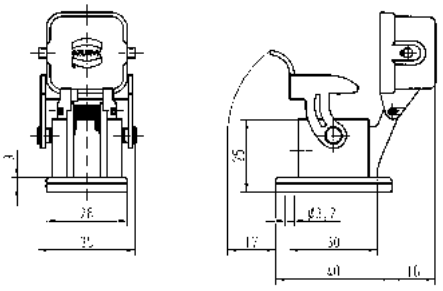
Han® M , Bulkhead mounted housings, Straight, With metal cover, With seal  for female inserts		09 37 003 0306	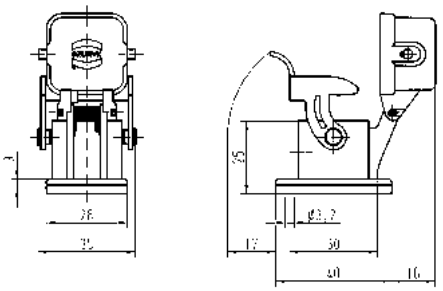

Identification	Cable entry	Part number	Drawing (dimensions in mm)
Han® M , Bulkhead mounted housings, Angled 		09 37 003 0801	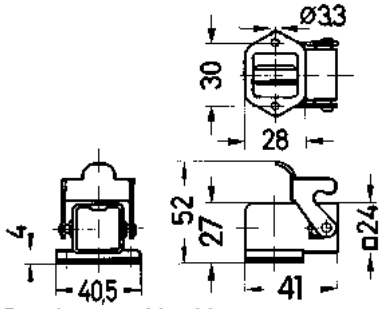 Panel cut out 22 x 22 mm
Han® M , Bulkhead mounted housings, Angled, Square mounting flange 		09 37 003 0811	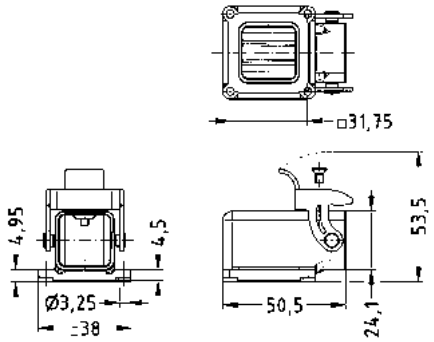
Han® M , Surface mounted housing, Top entry 	1x M20	19 37 003 1250	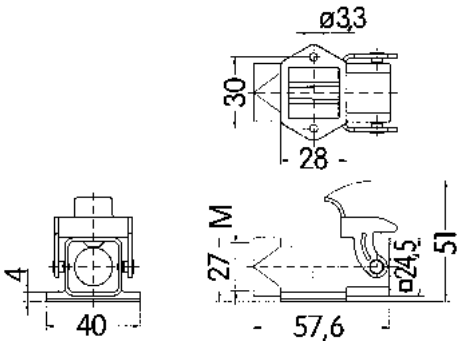 Panel cut out 22 x 22 mm
Han® M , Cable to cable housing, Top entry 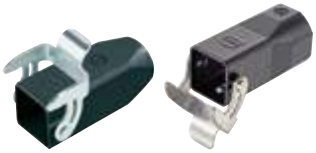	1x M20 1x M25	19 37 003 1750 19 37 003 1755	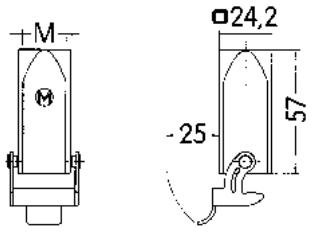

Identification	Cable entry	Part number	Drawing (dimensions in mm)
Han® M , Protection cover, for hoods, Metal, With fixing cord  for mounted female insert		09 37 003 5401	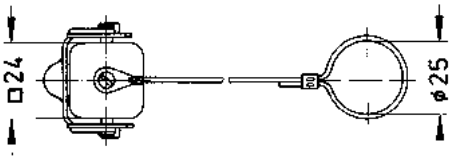
Han® M , Protection cover, for hoods, Metal, With fixing cord  for mounted male insert		09 37 003 5402	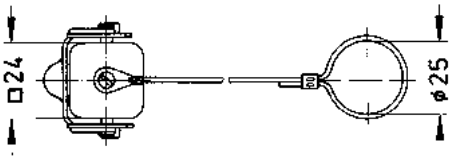
Han® M , Protection cover, for bulkhead mounted housings, for surface mounted housings, for cable to cable housing, Metal, With fixing cord  for mounted female insert		09 37 003 5405	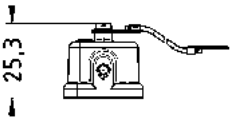 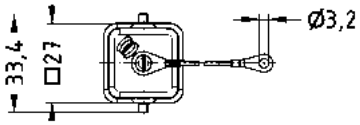
Han® M , Protection cover, for bulkhead mounted housings, for surface mounted housings, for cable to cable housing, Metal, With fixing cord  for mounted male insert		09 37 003 5406	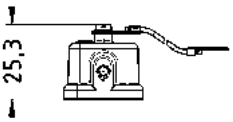 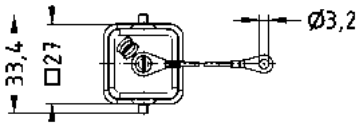

Han® M hoods/housings

Features

- Hoods/housings for rough environments
- Metal hoods and housings with excellent corrosion resistance
- Corrosion resistance ASTM B117-09 (500 h)
- Locking lever made of high-quality stainless steel

Technical characteristics

Limiting temperature	-40 ... +125 °C
Degree of protection acc. to IEC 60529	IP65
Type rating acc. to UL 50 / UL 50E	4, 4X, 12
Material (hood/housing)	Aluminium die-cast
Surface (hood/housing)	Powder-coated
Colour (hood/housing)	RAL 9005 (jet black)
Material (seal)	FPM
Material (locking)	Stainless steel, Polycarbonate
Colour (locking)	RAL 7037 (dust grey)
Material flammability class acc. to UL 94 (locking levers)	V-0
RoHS	compliant

Specifications and approvals

UL 1977 ECBT2.E235076
CSA-C22.2 No. 182.3 ECBT8.E235076
DNV GL

Hoods/housings for rough environments
Single locking lever

Identification	Cable entry	Part number Low construction	Part number High construction	Drawing (dimensions in mm)
Han® M , Hoods, Top entry 	1x M20 1x M25 1x M32	19 37 006 1440	19 37 006 0445 19 37 006 0446 19 37 006 0447	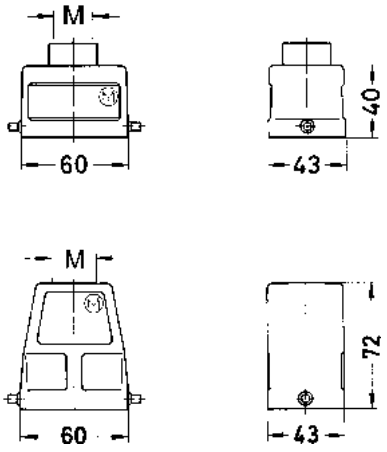
Han® M , Hoods, Side entry 	1x M20 1x M25	19 37 006 1540	19 37 006 0545 19 37 006 0546	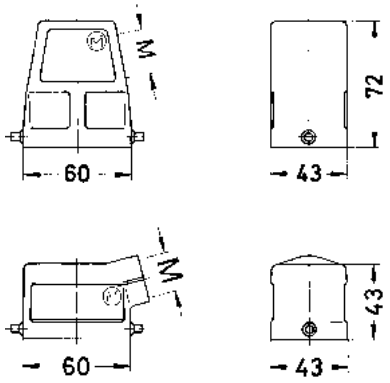
Han® M , Bulkhead mounted housings 		09 37 006 0301		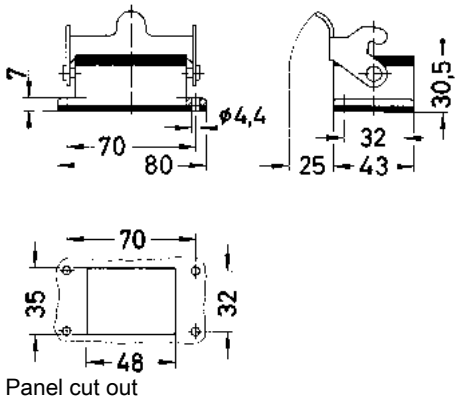 Panel cut out

Identification	Cable entry	Part number Low construction	Part number High construction	Drawing (dimensions in mm)
Han® M , Bulkhead mounted housings, With metal cover 		09 37 006 0318		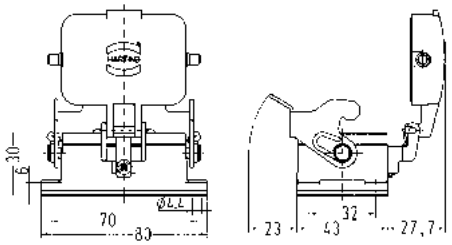
Han® M , Surface mounted housing, With thermo-plastic cover, Side entry, Han-Easy Lock® 	2x M25		19 37 006 0296	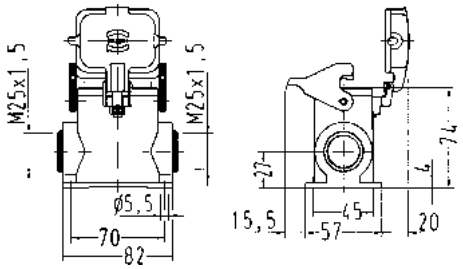
Han® M , Surface mounted housing, Side entry 	2x M20	19 37 006 1290		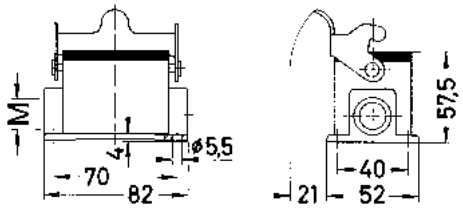
Han® M , Protection cover, for bulkhead mounted housings, for surface mounted housings, Metal 		09 37 006 5405	09 37 006 5405	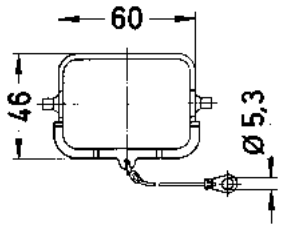
Han® M , Protection cover, for cable to cable housing, Metal 		09 37 006 5407	09 37 006 5407	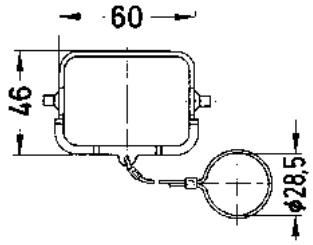

Han® M hoods/housings

Size 10 B

Hoods/housings for rough environments
Double locking lever

Identification	Cable entry	Part number Low construction	Part number High construction	Drawing (dimensions in mm)
Han® M , Hoods, Top entry 	1x M20 1x M25 1x M32 2x M20	19 37 010 1420	19 37 010 0426 19 37 010 0427 19 37 010 0465	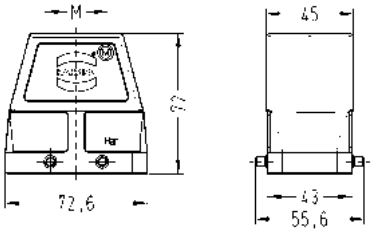
Han® M , Hoods, Side entry 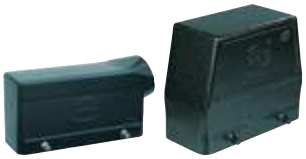	1x M20 1x M25 1x M32 1x M40	19 37 010 1520	19 37 010 0526 19 37 010 0527 19 37 010 0528	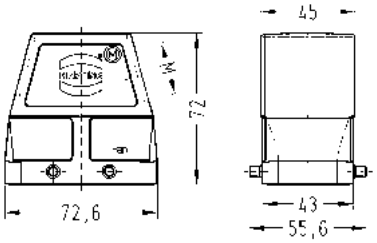
Han® M , Bulkhead mounted housings 		09 37 010 0301		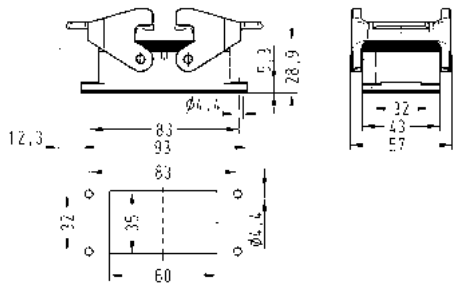 Panel cut out

Identification	Cable entry	Part number Low construction	Part number High construction	Drawing (dimensions in mm)
Han® M , Surface mounted housing, Side entry 	2x M20 2x M32	19 37 010 1270	19 37 010 0272	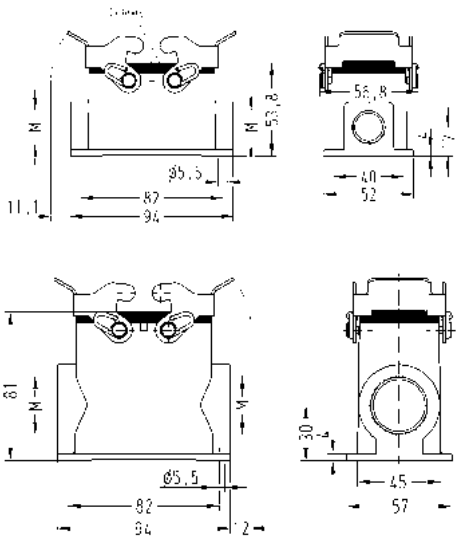
Han® M , Protection cover, for hoods, Metal, With fixing cord 		09 37 010 5403	09 37 010 5403	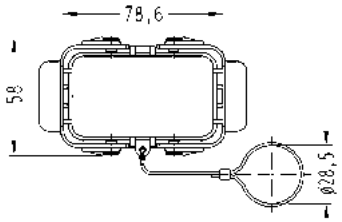
Han® M , Protection cover, for bulkhead mounted housings, for surface mounted housings, for cable to cable housing, Metal, With fixing cord 		09 37 010 5405	09 37 010 5405	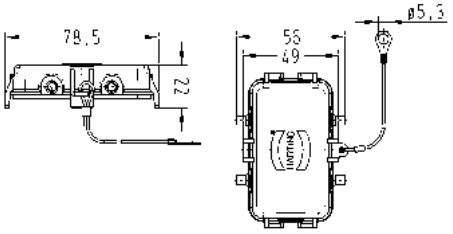

Hoods/housings for rough environments
Single locking lever

Identification	Cable entry	Part number	Drawing (dimensions in mm)
Han® M , Hoods, Top entry 	1x M32	19 37 010 0447	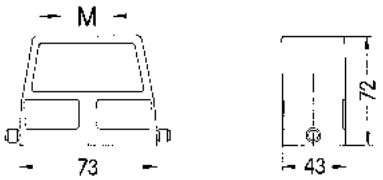
Han® M , Surface mounted housing, Side entry 	2x M25	19 37 010 0296	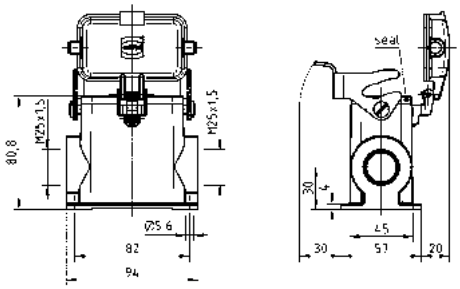

Hoods/housings for rough environments
Double locking lever

Identification	Cable entry	Part number Low construction	Part number High construction	Drawing (dimensions in mm)
Han® M , Hoods, Top entry 	1x M25 1x M32	19 37 016 1421	19 37 016 0427	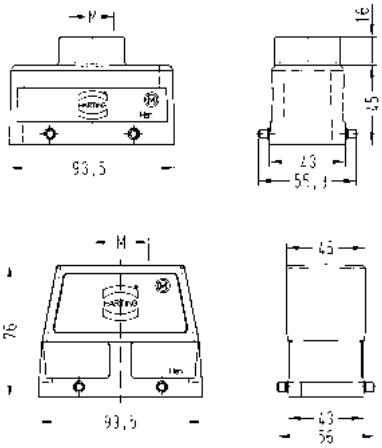
Han® M , Hoods, Side entry 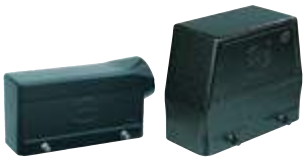	1x M25 1x M32 1x M40	19 37 016 1521	19 37 016 0527 19 37 016 0528	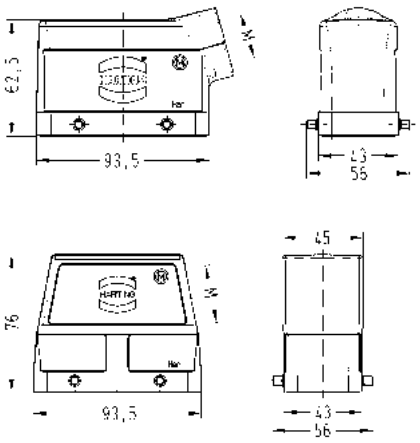
Han® M , Bulkhead mounted housings 		09 37 016 0301		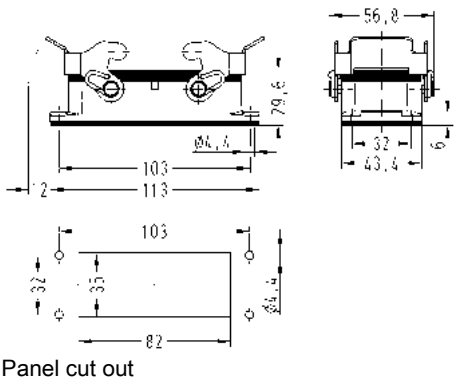 Panel cut out

Han® M hoods/housings

Size 16 B

Identification	Cable entry	Part number Low construction	Part number High construction	Drawing (dimensions in mm)
Han® M , Surface mounted housing, Side entry 	1x M25 2x M32 2x M40	19 37 016 1231	19 37 016 0272 19 37 016 0273	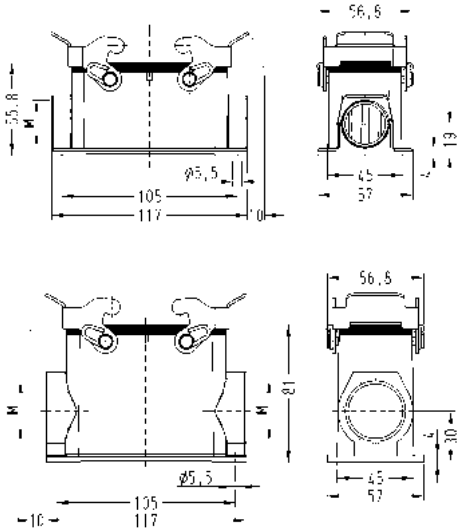
Han® M , Protection cover, for hoods, Metal, With fixing cord 		09 37 016 5402	09 37 016 5402	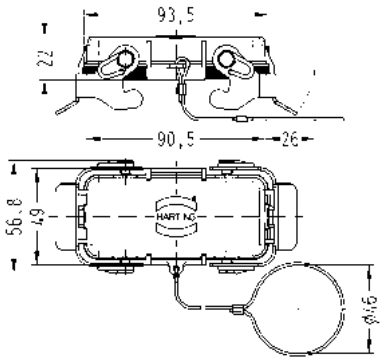
Han® M , Protection cover, for bulkhead mounted housings, for surface mounted housings, for cable to cable housing, Metal, With fixing cord 		09 37 016 5405	09 37 016 5405	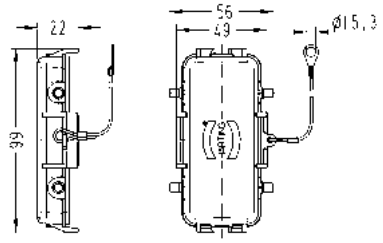

Hoods/housings for rough environments
Central locking lever (on the hood)

Identification	Cable entry	Part number	Drawing (dimensions in mm)
Han® M , Hoods, Top entry 	1x M32	19 37 016 0487	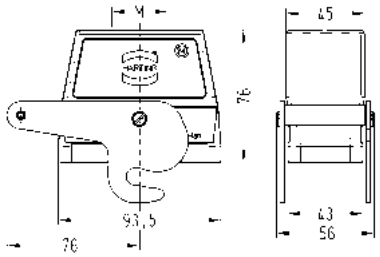
Han® M , Hoods, Side entry 	1x M32	19 37 016 0587	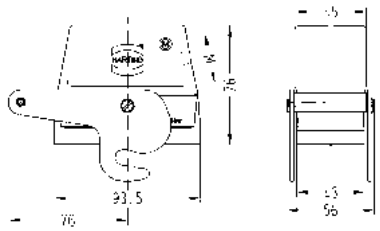
Han® M , Surface mounted housing, Side entry 	2x M32	19 37 016 0282	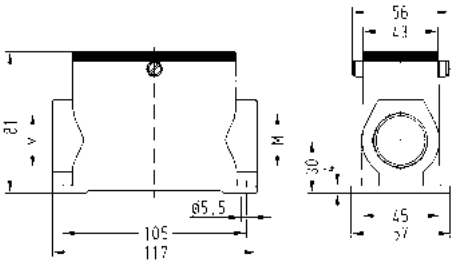

Hoods/housings for rough environments
Double locking lever

Identification	Cable entry	Part number Low construction	Part number High construction	Drawing (dimensions in mm)
Han® M , Hoods, Top entry 	1x M25 1x M32 1x M40 2x M25 2x M32	19 37 024 1421	19 37 024 0427 19 37 024 0428 19 37 024 0466 19 37 024 0467	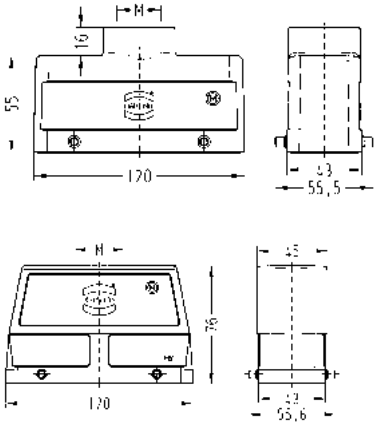
Han® M , Hoods, Side entry 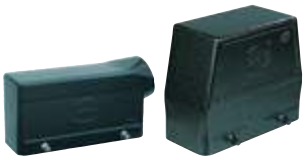	1x M25 1x M32 1x M40	19 37 024 1521	19 37 024 0527 19 37 024 0528	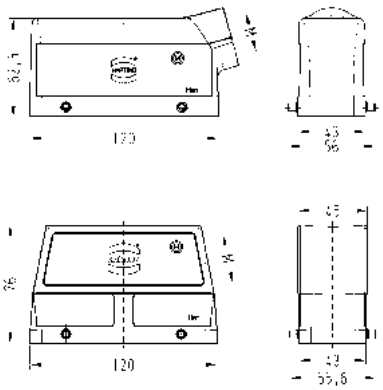
Han® M , Bulkhead mounted housings 		09 37 024 0301		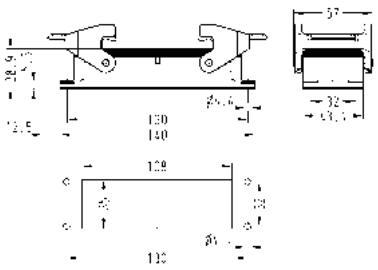 Panel cut out

Identification	Cable entry	Part number Low construction	Part number High construction	Drawing (dimensions in mm)
Han® M , Surface mounted housing, Side entry 	2x M32		19 37 024 0272	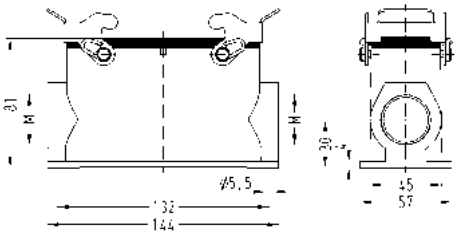
Han® M , Cable to cable housing, Side entry 	1x M40		19 37 024 0733	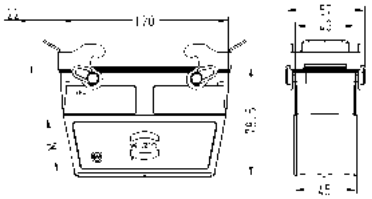
Han® M , Protection cover, for hoods, Metal, With fixing cord 		09 37 024 5402	09 37 024 5402	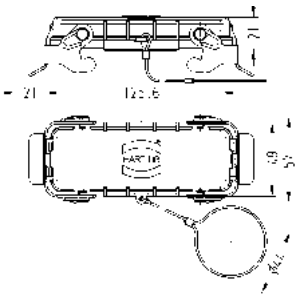
Han® M , Protection cover, for bulkhead mounted housings, for surface mounted housings, for cable to cable housing, Metal, With fixing cord 		09 37 024 5405	09 37 024 5405	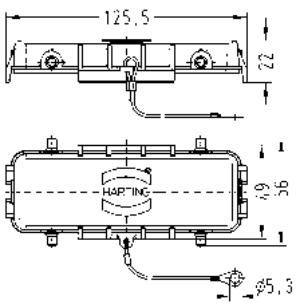

Hoods/housings for rough environments
Central locking lever (on the hood)

Identification	Cable entry	Part number Low construction	Part number High construction	Drawing (dimensions in mm)
Han® M , Hoods, Top entry 	1x M32		19 37 024 0487	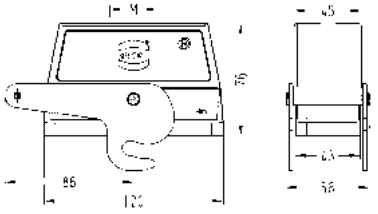
Han® M , Hoods, Side entry 	1x M32		19 37 024 0587	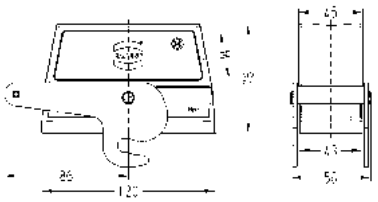
Han® M , Bulkhead mounted housings 		09 37 024 0381		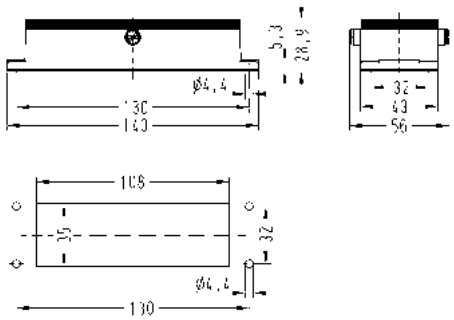 Panel cut out
Han® M , Surface mounted housing, Side entry 	2x M32		19 37 024 0282	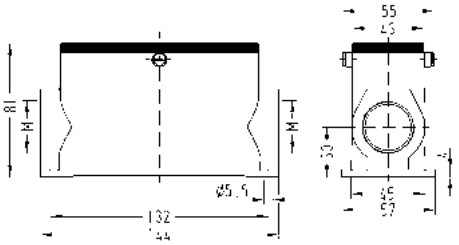

Hoods/housings for rough environments
Single locking lever

Identification	Cable entry	Part number Low construction	Part number High construction	Drawing (dimensions in mm)
Han® M , Hoods, Top entry 	1x M40 1x M50 4x M25		19 37 048 0448 19 37 048 0449 19 37 048 0401	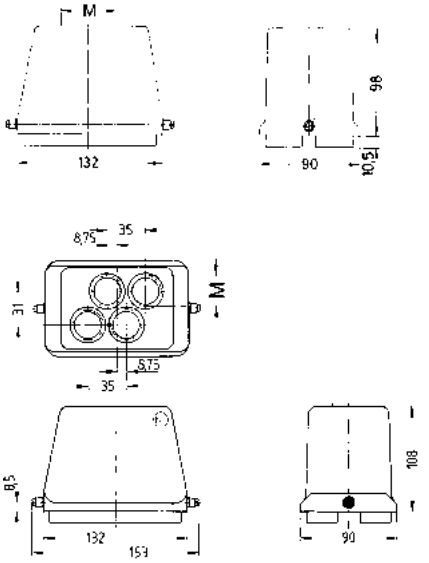
Han® M , Hoods, Side entry 	1x M40		19 37 048 0548	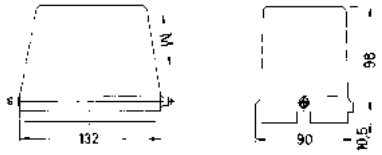
Han® M , Bulkhead mounted housings, With thermo-plastic cover 		09 37 048 0301		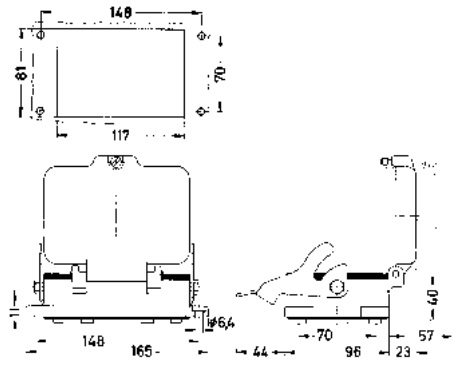

Han® 3 EMC hoods/housings

Features

- Hoods/Housings for higher EMC requirements
- Continuous shield connection using conductive surface and conductive seal
- Metal hoods / housings with high shielding efficiency
- Field of application: for sensitive interconnections that have to be shielded against electrical,magnetic or electro-magnetic interferences
- Distinguishing feature: Electrically conductive surface, internal seal

Technical characteristics

Limiting temperature	-40 ... +125 °C
Degree of protection acc. to IEC 60529	IP44, IP65 / IP67, with seal screw 09 20 000 9918
Material (hood/housing)	Zinc die-cast
Surface (hood/housing)	Uncoated
Colour (hood/housing)	Unpainted
Material (seal)	PTFE, NBR
Material (locking)	Steel
Surface (locking)	Zinc plated
RoHS	compliant, compliant with exemption
RoHS exemptions	**6a:** Lead as an alloying element in steel for machining purposes and in galvanised steel containing up to 0,35 % lead by weight, **6c:** Copper alloy containing up to 4 % lead by weight

Specifications and approvals

DNV GL

Hoods/Housings for higher EMC requirements
Single locking lever

Identification	Cable entry	Part number	Drawing (dimensions in mm)
Han® EMC , Hoods, Top entry 	1x M20 1x M25	19 62 003 1440 19 62 003 1445	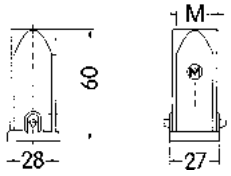
Han® EMC , Hoods, Side entry 	1x M20	19 62 003 1640	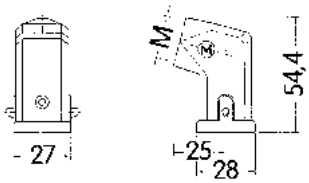
Han® EMC , Screw mounted housings, Straight 	1x M20	19 62 003 1150	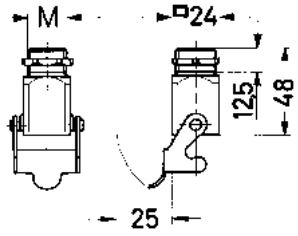
Han® EMC , Screw mounted housings, Angled 	1x M20 1x M25	19 62 003 1160 19 62 003 1165	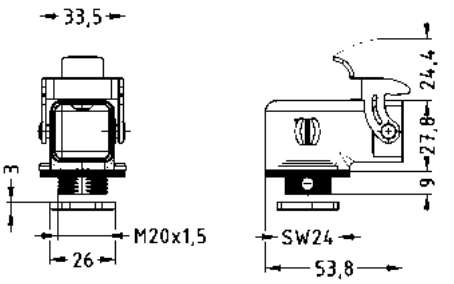 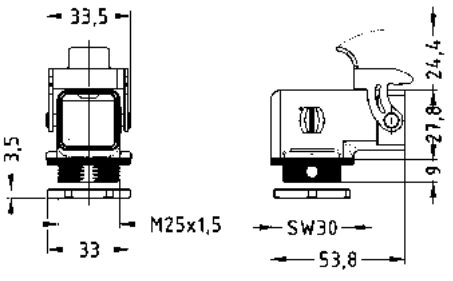

Han® 3 EMC hoods/housings

Size 3 A

Identification	Cable entry	Part number	Drawing (dimensions in mm)
Han® EMC , Bulkhead mounted housings, Straight 		09 62 003 0301	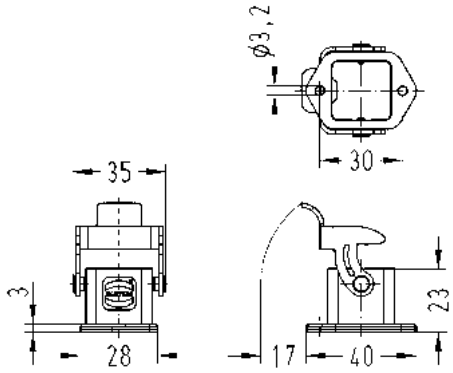 Panel cut out 22 x 22 mm
Han® EMC , Bulkhead mounted housings, Straight, for PCB termination with Han® Q 5/0 		09 62 003 0304	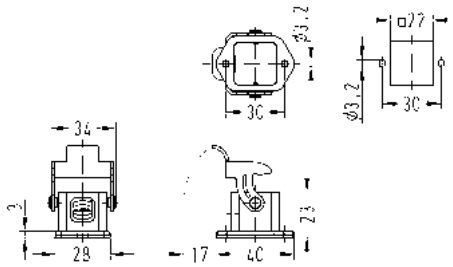
Han® EMC , Bulkhead mounted housings, Angled 		09 62 003 0801	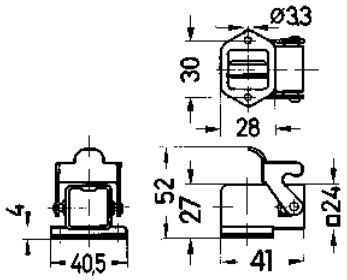 Panel cut out 22 x 22 mm
Han® EMC , Bulkhead mounted housings, Angled, 4 fixing screws 		09 62 003 0810	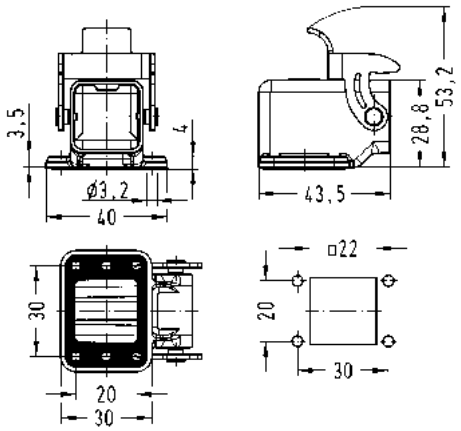

Han® 3 EMC hoods/housings

Size 3 A

Identification	Cable entry	Part number	Drawing (dimensions in mm)
Han® EMC , Surface mounted housing, Top entry 	1x M20	19 62 003 1250	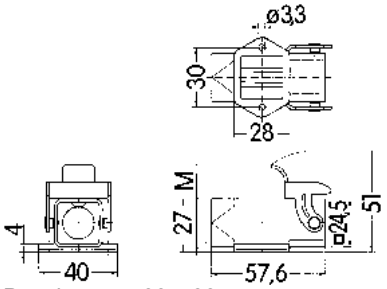 Panel cut out 22 x 22 mm
Han® EMC , Cable to cable housing, Top entry 	1x M20 1x M25	19 62 003 1750 19 62 003 1755	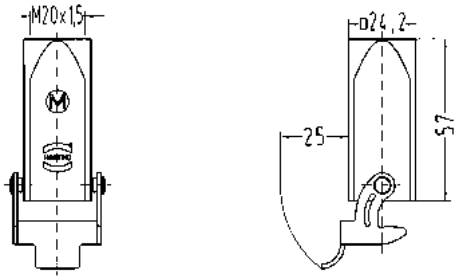
Han® EMC , Panel feed through housing, Top entry 	1x M20	19 62 003 1120	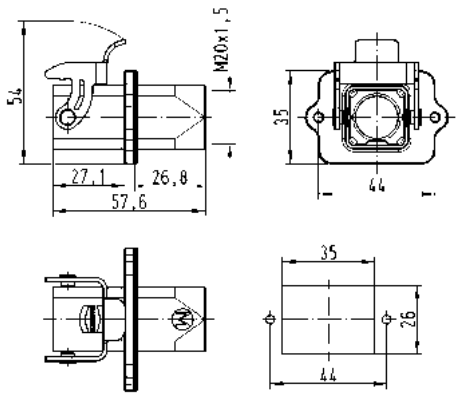 Panel cut out

Features

- Hoods/Housings for higher EMC requirements
- Continuous shield connection using conductive surface
- Metal hoods / housings with high shielding efficiency
- Field of application: for sensitive interconnections that have to be shielded against electrical,magnetic or electro-magnetic interferences
- Distinguishing feature: Electrically conductive surface, internal seal

Technical characteristics

Limiting temperature	-40 ... +125 °C
Degree of protection acc. to IEC 60529	IP65
Type rating acc. to UL 50 / UL 50E	4, 12
Material (hood/housing)	Aluminium die-cast
Surface (hood/housing)	Uncoated
Colour (hood/housing)	Unpainted
Material (seal)	NBR
Material (locking)	Polycarbonate, Stainless steel
Colour (locking)	RAL 7037 (dust grey)
Material flammability class acc. to UL 94 (locking levers)	V-0
RoHS	compliant

Specifications and approvals

UL 1977 ECBT2.E235076
CSA-C22.2 No. 182.3 ECBT8.E235076
DNV GL

Hoods/Housings for higher EMC requirements
Single locking lever

Identification	Cable entry	Part number	Drawing (dimensions in mm)
Han® EMC , Hoods, Top entry 	1x M25	19 62 015 0446	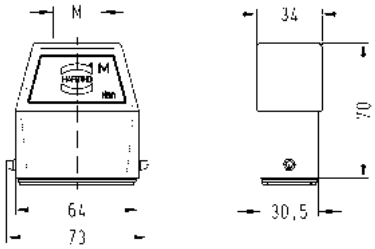
Han® EMC , Hoods, Side entry 	1x M25	19 62 015 0546	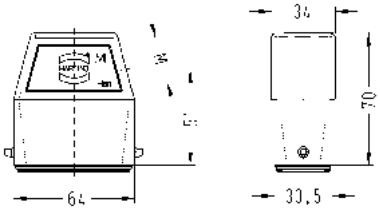
Han® EMC , Bulkhead mounted housings, Han-Easy Lock® 		09 62 015 0301	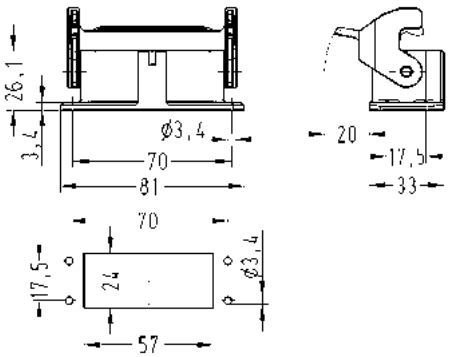 Panel cut out

Hoods/Housings for higher EMC requirements
Single locking lever

Identification	Cable entry	Part number	Drawing (dimensions in mm)
Han® EMC , Hoods, Top entry 	1x M25	19 62 025 0446	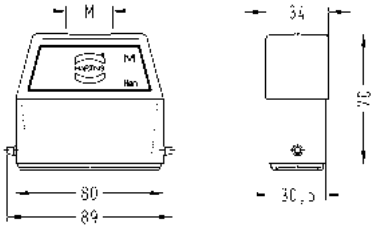
Han® EMC , Hoods, Side entry 	1x M25	19 62 025 0546	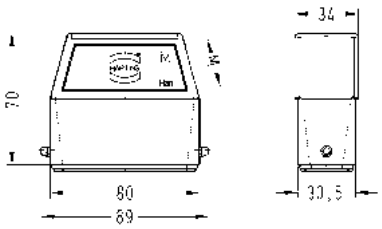
Han® EMC , Bulkhead mounted housings, Han-Easy Lock® 		09 62 025 0301	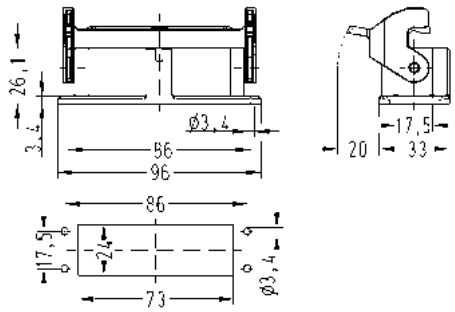 Panel cut out

Hoods/Housings for higher EMC requirements
Screw locking

Identification	Cable entry	Part number	Drawing (dimensions in mm)
Han® EMC , Hoods, Top entry 	1x M25 1x M32	19 62 006 0441 19 62 006 0442	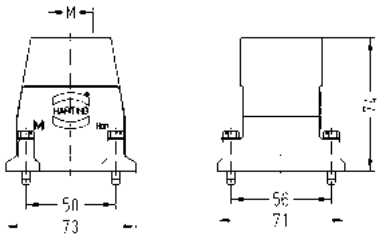
Han® EMC , Hoods, Side entry 	1x M25 1x M32	19 62 006 0541 19 62 006 0542	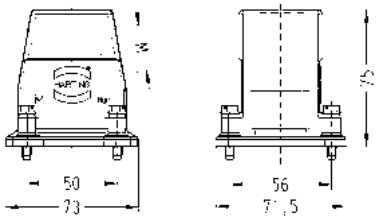
Han® EMC , Bulkhead mounted housings 		09 62 006 0301	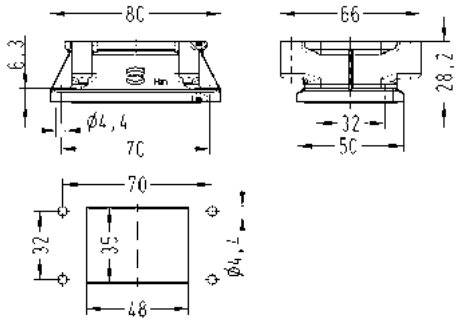 Panel cut out

Hoods/Housings for higher EMC requirements
Screw locking

Identification	Cable entry	Part number	Drawing (dimensions in mm)
Han® EMC , Hoods, Top entry 	1x M32	19 62 010 0442	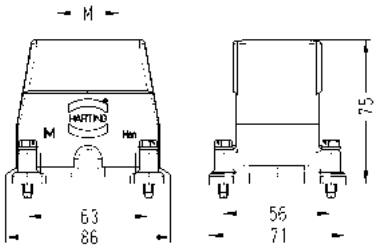
Han® EMC , Hoods, Side entry 	1x M32 1x M40	19 62 010 0542 19 62 010 0543	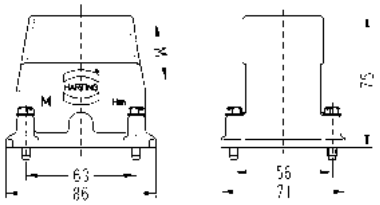
Han® EMC , Bulkhead mounted housings 		09 62 010 0301	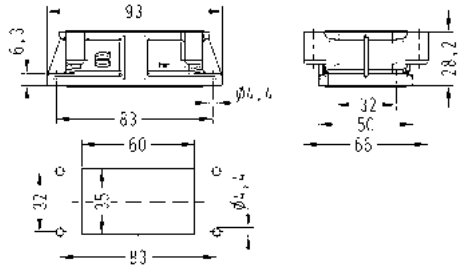 Panel cut out

Hoods/Housings for higher EMC requirements
Screw locking

Identification	Cable entry	Part number	Drawing (dimensions in mm)
Han® EMC , Hoods, Top entry 	1x M32	19 62 040 0442	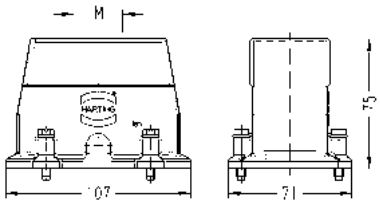
Han® EMC , Hoods, Side entry 	1x M32	19 62 040 0542	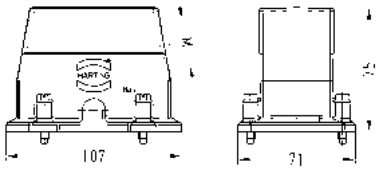
Han® EMC , Bulkhead mounted housings 		09 62 040 0301	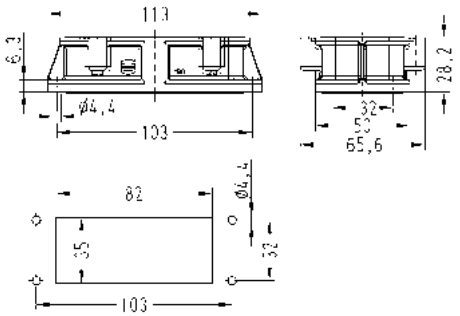 Panel cut out

Hoods/Housings for higher EMC requirements
Screw locking

Identification	Cable entry	Part number	Drawing (dimensions in mm)
Han® EMC , Hoods, Top entry 	1x M40	19 62 064 0443	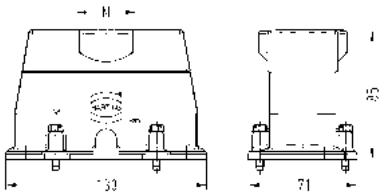
Han® EMC , Hoods, Side entry 	1x M40	19 62 064 0543	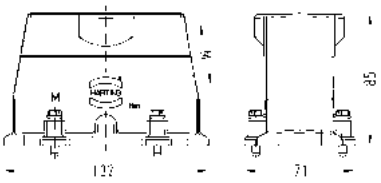
Han® EMC , Bulkhead mounted housings 		09 62 064 0301	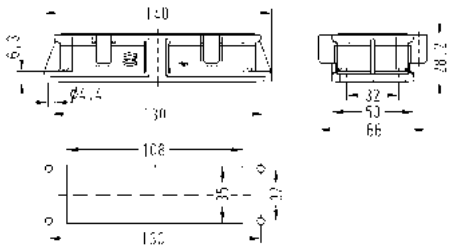 Panel cut out

Han® EMC/B hoods/housings

Features

- Hoods/Housings for higher EMC requirements
- Continuous shield connection using conductive surface
- Metal hoods / housings with high shielding efficiency
- Field of application: for sensitive interconnections that have to be shielded against electrical,magnetic or electro-magnetic interferences
- Distinguishing feature: Electrically conductive surface, internal seal
- Locking levers: Han-Easy Lock®

Technical characteristics

Limiting temperature	-40 ... +125 °C, -40 ... +200 °C With Han® High Temp components
Degree of protection acc. to IEC 60529	IP65
Type rating acc. to UL 50 / UL 50E	4, 12
Material (hood/housing)	Aluminium die-cast
Surface (hood/housing)	Uncoated
Colour (hood/housing)	Unpainted
Material (seal)	NBR
Material (locking)	Polycarbonate, Stainless steel
Colour (locking)	RAL 7037 (dust grey)
Material flammability class acc. to UL 94 (locking levers)	V-0
RoHS	compliant

Specifications and approvals

UL 1977 ECBT2.E235076
CSA-C22.2 No. 182.3 ECBT8.E235076
DNV GL

Han® EMC/B hoods/housings

Size 6 B

Single locking lever

Identification	Cable entry	Part number Low construction	Part number High construction	Drawing (dimensions in mm)
Han® EMC/B Han® High Temp , Hoods, Top entry 	1x M20 1x M25 1x M32	19 62 806 1440	19 62 806 0446 19 62 806 0447	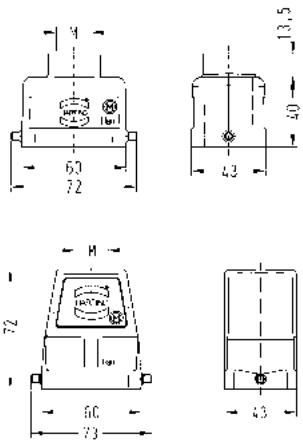
Han® EMC/B Han® High Temp , Hoods, Side entry 	1x M20 1x M25 1x M32	19 62 806 1540	19 62 806 0546 19 62 806 0547	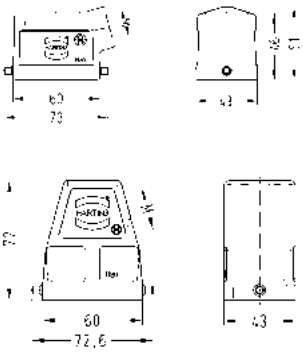
Han® EMC/B Han® High Temp , Hoods, Without cable entry 			09 62 806 0801	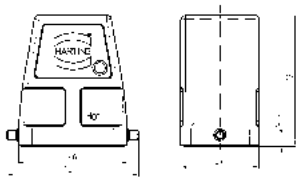
Han® EMC/B , Bulkhead mounted housings, Han-Easy Lock® 		09 62 806 0301		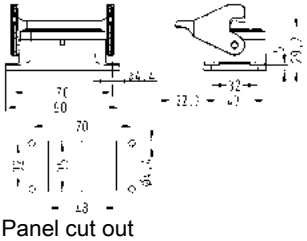 Panel cut out

Identification	Cable entry	Part number Low construction	Part number High construction	Drawing (dimensions in mm)
Han® EMC/B , Surface mounted housing, Side entry, Han-Easy Lock® 	2x M20	19 62 806 1290		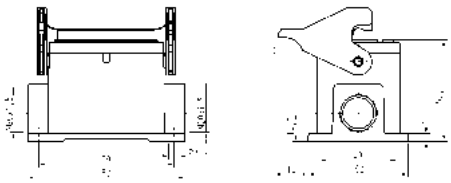
Han® EMC/B , Protection cover, for bulkhead mounted housings, for surface mounted housings, Metal, With fixing cord 		09 62 806 5425	09 62 806 5425	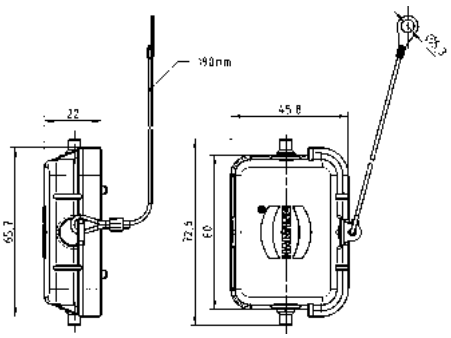

Double locking lever

Identification	Cable entry	Part number Low construction	Part number High construction	Drawing (dimensions in mm)
Han® EMC/B Han® High Temp , Hoods, Top entry	1x M20 1x M25 1x M32	19 62 810 1420 19 62 810 1421	19 62 810 0426 19 62 810 0427	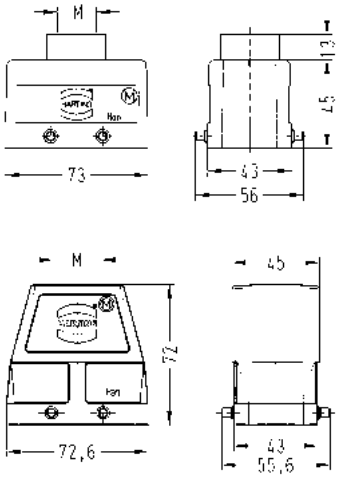
Han® EMC/B Han® High Temp , Hoods, Side entry	1x M20 1x M25 1x M32	19 62 810 1520	19 62 810 0526 19 62 810 0527	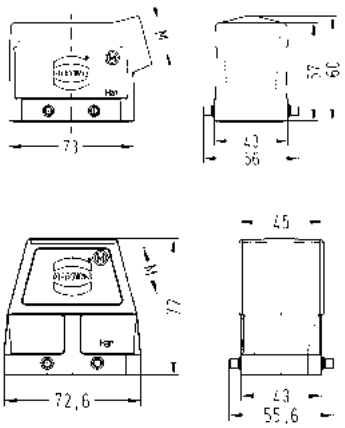
Han® EMC/B Han® High Temp , Hoods, Without cable entry			09 62 810 0801	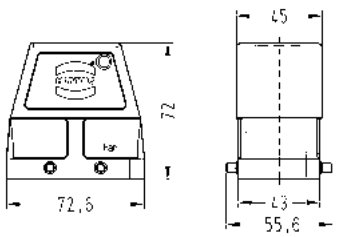

Han® EMC/B hoods/housings

Size 10 B

Identification	Cable entry	Part number Low construction	Part number High construction	Drawing (dimensions in mm)
Han® EMC/B , Bulkhead mounted housings, Han-Easy Lock® 		09 62 810 0301		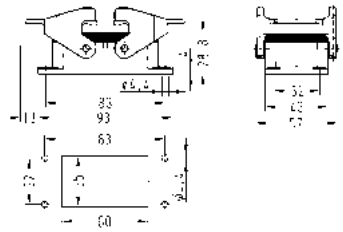 Panel cut out
Han® EMC/B , Surface mounted housing, Side entry, Han-Easy Lock® 	2x M25 2x M32	19 62 810 1271	19 62 810 0272	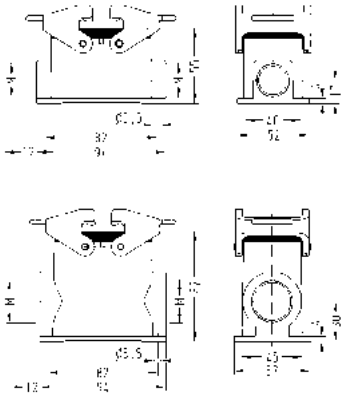
Han® EMC/B , Cable to cable housing, Top entry, Han-Easy Lock® 	1x M25 1x M32		19 62 810 0766 19 62 810 0757	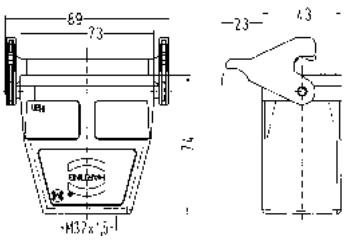
Han® EMC/B , Protection cover, for bulkhead mounted housings, for surface mounted housings, Metal, With fixing cord 		09 62 810 5425	09 62 810 5425	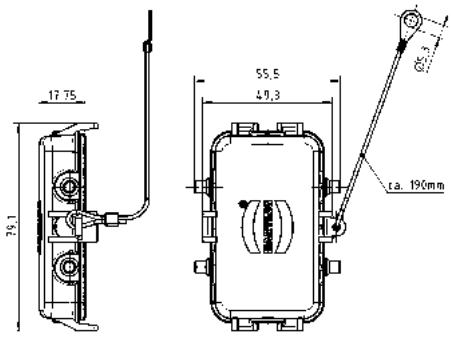

Hoods/Housings for higher EMC requirements
Single locking lever

Identification	Cable entry	Part number Low construction	Part number High construction	Drawing (dimensions in mm)
Han® EMC/B , Hoods, Top entry 	1x M25 1x M32		19 62 810 0446 19 62 810 0447	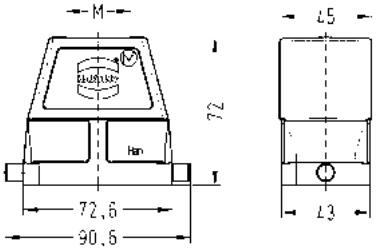
Han® EMC/B , Hoods, Side entry 	1x M25 1x M32		19 62 810 0546 19 62 810 0547	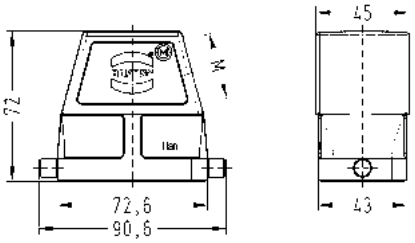
Han® EMC/B , Bulkhead mounted housings, Han-Easy Lock® 		09 62 810 0305		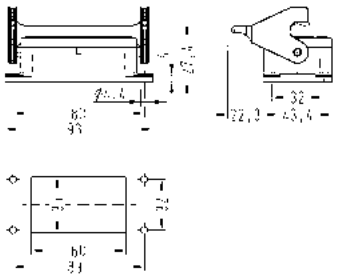 Panel cut out

Double locking lever

Identification	Cable entry	Part number Low construction	Part number High construction	Drawing (dimensions in mm)
Han® EMC/B Han® High Temp , Hoods, Top entry 	1x M25 1x M32 1x M40	19 62 816 1421	19 62 816 0427 19 62 816 0428	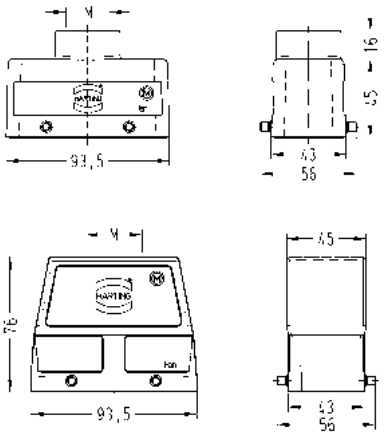
Han® EMC/B Han® High Temp , Hoods, Side entry 	1x M25 1x M32 1x M40	19 62 816 1521	19 62 816 0527 19 62 816 0528	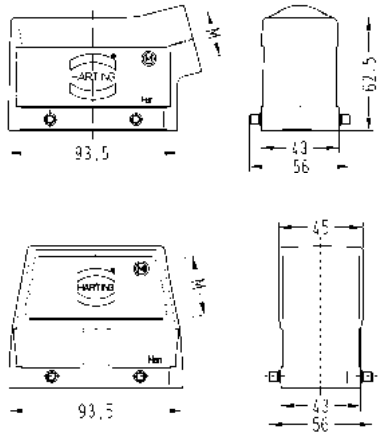
Han® EMC/B Han® High Temp , Hoods, Without cable entry 			09 62 816 0801	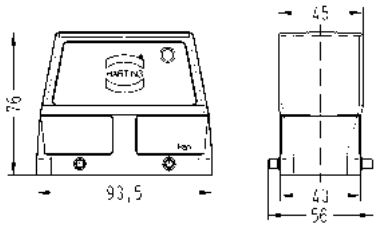

Han® EMC/B hoods/housings

Size 16 B

Identification	Cable entry	Part number Low construction	Part number High construction	Drawing (dimensions in mm)
Han® EMC/B , Bulkhead mounted housings, Han-Easy Lock® 		09 62 816 0301		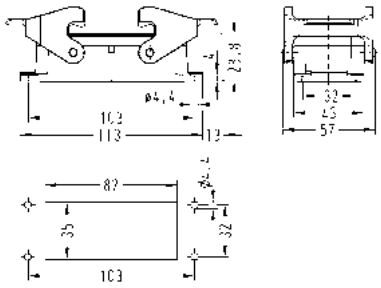 Panel cut out
Han® EMC/B , Surface mounted housing, Side entry, Han-Easy Lock® 	2x M25 2x M40	19 62 816 1271	19 62 816 0273	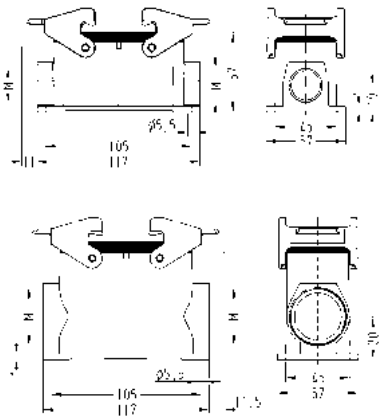
Han® EMC/B , Protection cover, for bulkhead mounted housings, for surface mounted housings, Metal, With fixing cord 		09 62 816 5425	09 62 816 5425	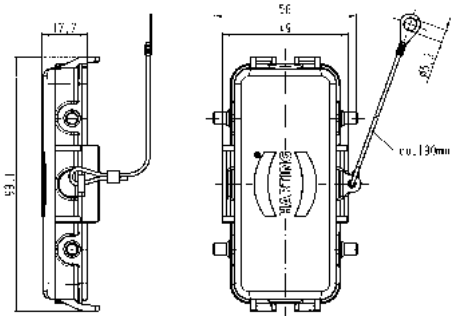

Double locking lever

Identification	Cable entry	Part number Low construction	Part number High construction	Drawing (dimensions in mm)
Han® EMC/B Han® High Temp , Hoods, Top entry 	1x M32	19 62 824 1422	19 62 824 0427	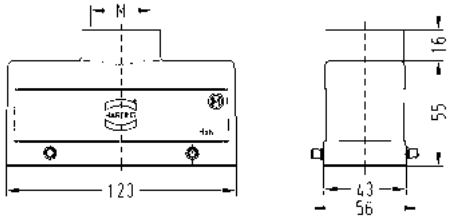 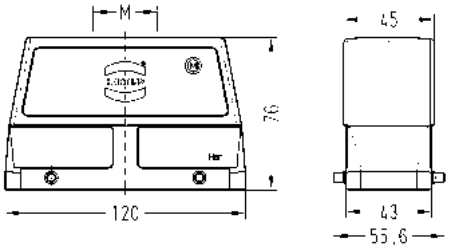
Han® EMC/B Han® High Temp , Hoods, Side entry 	1x M25 1x M32 1x M40	19 62 824 1521	19 62 824 0527 19 62 824 0528	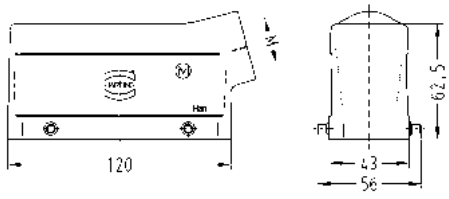 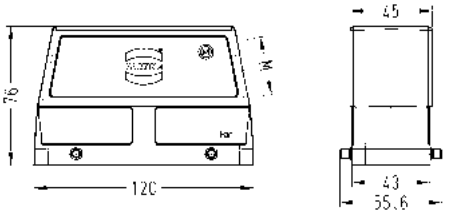
Han® EMC/B Han® High Temp , Hoods, Without cable entry 			09 62 824 0801	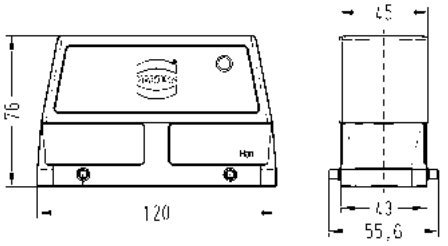

Han® EMC/B hoods/housings

Size 24 B

Identification	Cable entry	Part number Low construction	Part number High construction	Drawing (dimensions in mm)
Han® EMC/B , Bulkhead mounted housings, Han-Easy Lock® 		09 62 824 0301		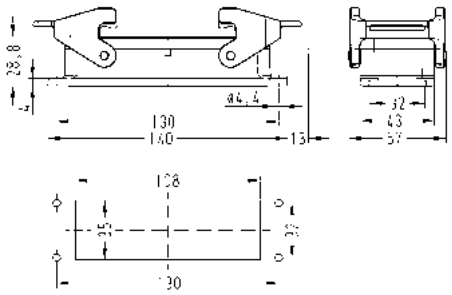 Panel cut out
Han® EMC/B , Surface mounted housing, Side entry, Han-Easy Lock® 	2x M25 2x M40	19 62 824 1271	19 62 824 0273	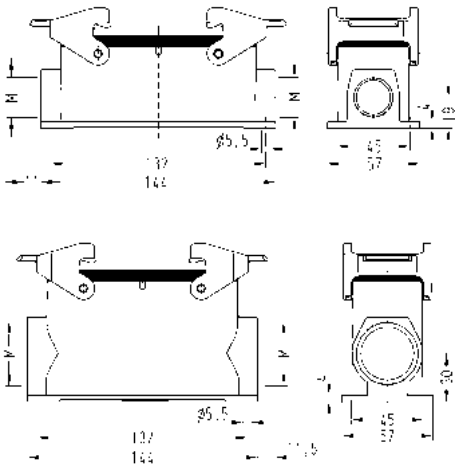
Han® EMC/B , Protection cover, for bulkhead mounted housings, for surface mounted housings, Metal, With fixing cord 		09 62 824 5425	09 62 824 5425	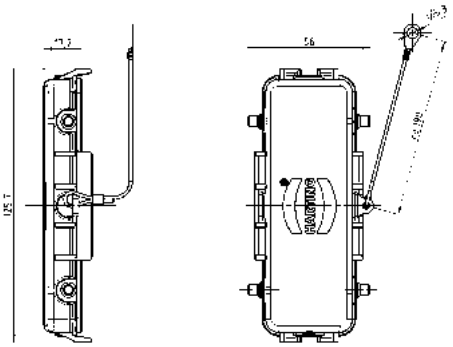

Han® 3 HPR hoods/housings

Features

- Hoods/housings for harsh outdoor environments
- Metal hoods and housings with excellent corrosion resistance
- Corrosion resistance ASTM B117-09 (500 h)
- Excellent EMC characteristics
- Screw locking M4
- Field of application: for external electrical interconnections in vehicles, in highly demanding environments and wet areas, as well as for sensitive interconnections that have to be shielded
- Distinguishing feature: colour-coded black, internal seal

Technical characteristics

Limiting temperature	-40 ... +125 °C
Tightening torque (screw locking)	2 Nm
Degree of protection acc. to IEC 60529	IP65, IP68, IP69 / IPX9K acc. to ISO 20653
Type rating acc. to UL 50 / UL 50E	4, 4X, 12
Material (hood/housing)	Zinc die-cast
Surface (hood/housing)	Powder-coated, Chromated
Colour (hood/housing)	RAL 9005 (jet black)
Material (seal)	NBR, FPM
Material (locking)	Stainless steel
RoHS	compliant

Specifications and approvals

UL 1977 ECBT2.E235076
CSA-C22.2 No. 182.3 ECBT8.E235076
DNV GL

Details

By using the inserts of Han® Q and Han A® series, the sealing on the insert has to be removed. The sealing screw of the insert must be replaced by the sealing screw of the hood/housing.

By using the angled bulkhead and surface mounted housings with through holes in the mounting flanges, it has to be ensured by the customer that the fixing screws appropriately sealed from the inside of the housing.

Hoods/housings for harsh outdoor environments
Toggle locking

Identification	Cable entry	Part number	Drawing (dimensions in mm)
Han® HPR , Hoods, Top entry, Pack contents: With seal screw 	1x M20 1x M25	19 40 703 0400 19 40 703 0401	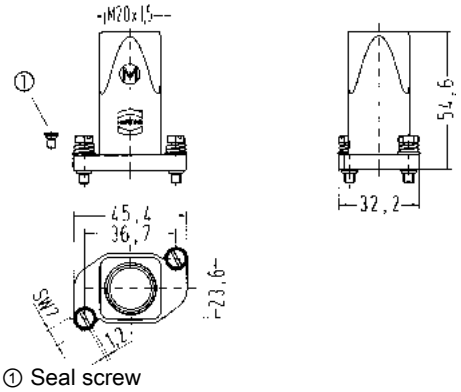 ① Seal screw 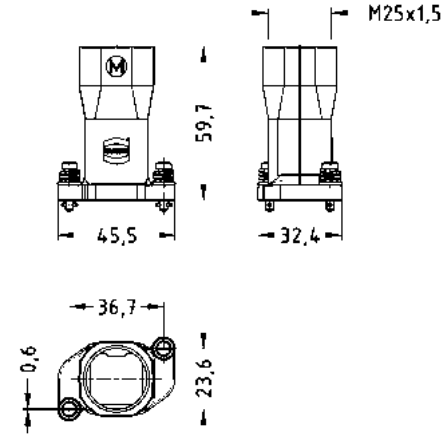
Han® HPR , Bulkhead mounted housings, Straight, Pack contents: With seal screw 		09 40 703 0301	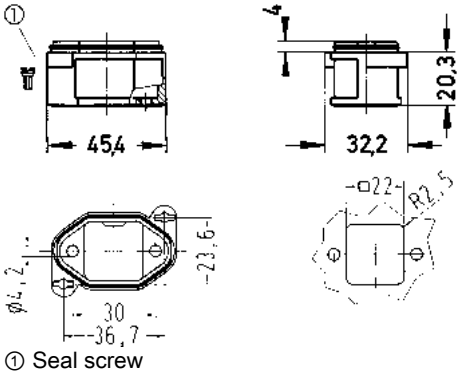 ① Seal screw

Identification	Cable entry	Part number	Drawing (dimensions in mm)
Han® HPR , Protection cover, for hoods 		09 40 703 5403	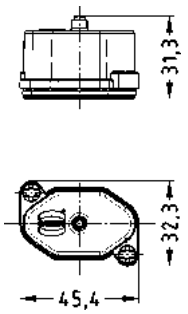
Han® HPR , Protection cover, for hoods, With fixing cord 		09 40 703 5404	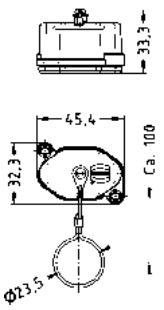
Han® HPR , Protection cover, for bulkhead mounted housings, for surface mounted housings 		09 40 703 5401	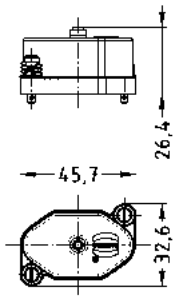
Han® HPR , Protection cover, for bulkhead mounted housings, for surface mounted housings, With fixing cord 		09 40 703 5402	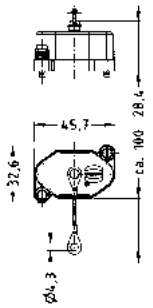

Han® 3 HPR - powder-coated

Size 3 A

Identification	Cable entry	Part number	Drawing (dimensions in mm)
Han® HPR , Adapter, Open bottom, for assembly of bulkhead mounted bulkhead mounted position, Top entry 	1x M20	19 40 703 0900	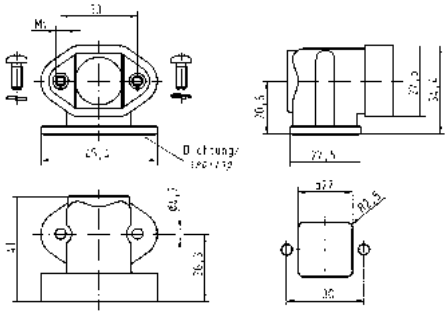
Han® HPR , Adapter, Open bottom, for assembly of bulkhead mounted bulkhead mounted position 		09 40 703 0902	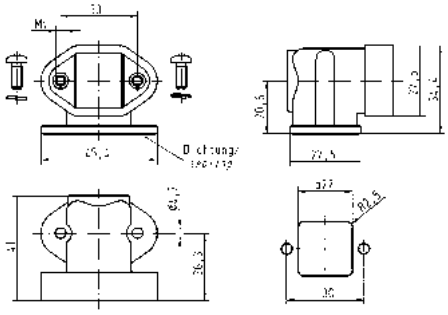

Hoods/housings for harsh outdoor environments
Screw locking

Identification	Cable entry	Part number	Drawing (dimensions in mm)
Han® HPR , Hoods, Top entry, Pack contents: With seal screw 	1x M20 1x M25	19 40 703 0410 19 40 703 0411	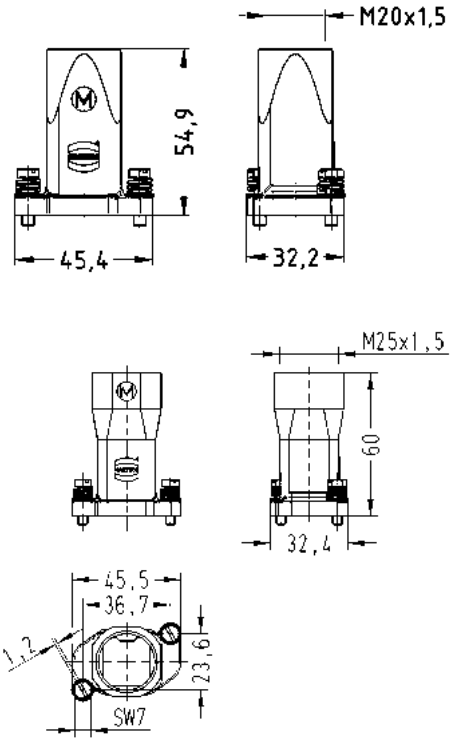
Han® HPR , Bulkhead mounted housings, Straight, Pack contents: With seal screw 		09 40 703 0311	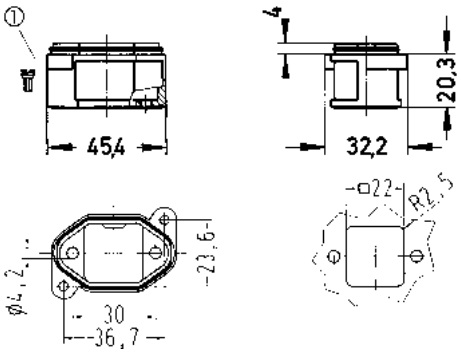 ① Seal screw

Han® 3 HPR - powder-coated

Size 3 A

Identification	Cable entry	Part number	Drawing (dimensions in mm)
Han® HPR , Bulkhead mounted housings, Angled, Open bottom, Feed through hole for fixing screws, Pack contents: With seal screw 		09 40 703 0950	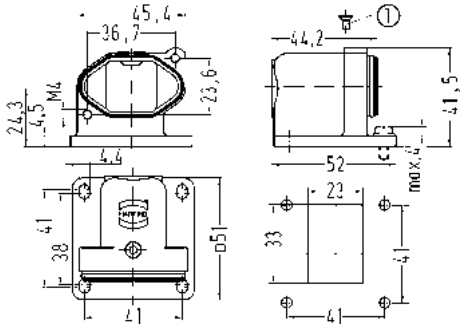 ① Seal screw
Han® HPR , Bulkhead mounted housings, Angled, Open bottom, Long version, Feed through hole for fixing screws, Pack contents: With seal screw 		09 40 703 0951	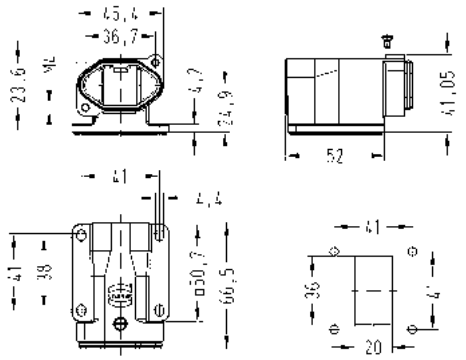
Han® HPR , Bulkhead mounted housings, Angled, Open bottom, Long version, Tapped blind hole for fixing screws, Pack contents: With seal screw 		09 40 703 0953	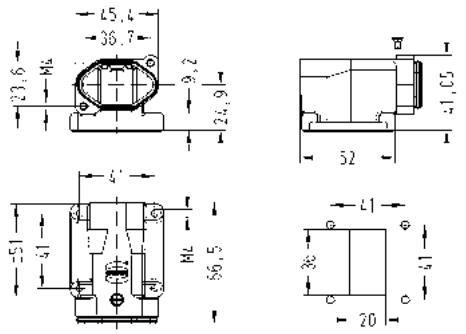
Han® HPR , Surface mounted housing, Angled, Bottom closed, Feed through hole for fixing screws, Top entry, Pack contents: With seal screw 	1x M20	19 40 703 0950	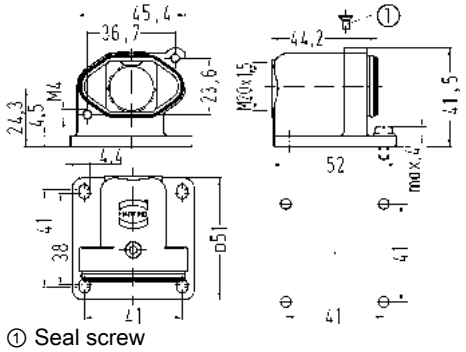 ① Seal screw

Identification	Cable entry	Part number	Drawing (dimensions in mm)
Han® HPR , Surface mounted housing, Angled, Bottom closed, Long version, Bottom closed, Feed through hole for fixing screws, Top entry, Pack contents: With seal screw 	1x M25	19 40 703 0951	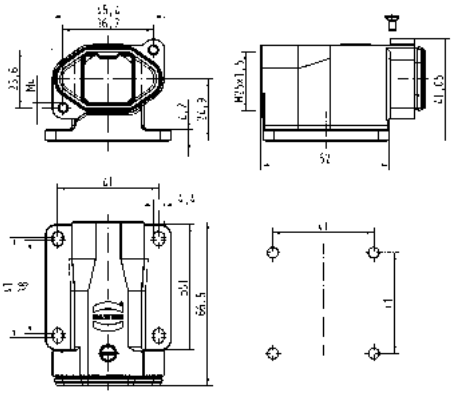
Han® HPR , Surface mounted housing, Angled, Bottom closed, Long version, Bottom closed, Tapped blind hole for fixing screws, Top entry, Pack contents: With seal screw 	1x M25	19 40 703 0953	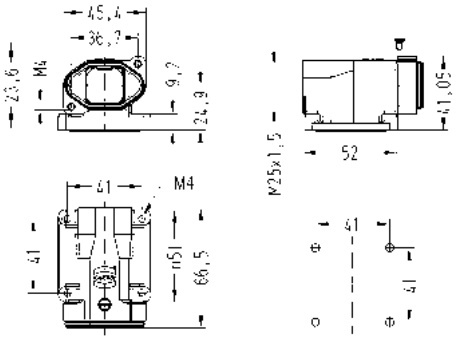
Han® HPR , Protection cover, for hoods 		09 40 703 5413	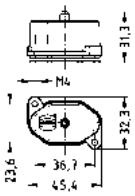
Han® HPR , Protection cover, for hoods, With fixing cord 		09 40 703 5414	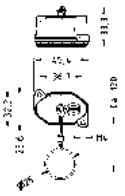
Han® HPR , Protection cover, for bulkhead mounted housings, for surface mounted housings 		09 40 703 5411	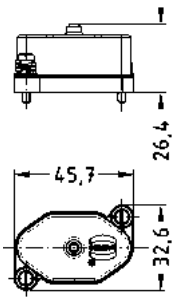

Han® 3 HPR - powder-coated

Size 3 A

Identification	Cable entry	Part number	Drawing (dimensions in mm)
Han® HPR , Protection cover, for bulkhead mounted housings, for surface mounted housings, With fixing cord 		09 40 703 5412	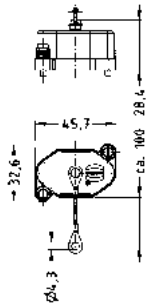
Han® HPR , Adapter, Open bottom, for assembly of bulkhead mounted bulkhead mounted position, Top entry 	1x M20	19 40 703 0900	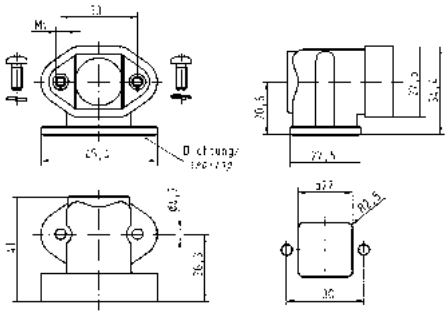
Han® HPR , Adapter, Open bottom, for assembly of bulkhead mounted bulkhead mounted position 		09 40 703 0902	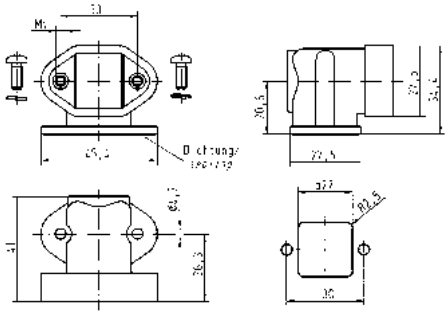

Hoods/housings for harsh outdoor environments
Toggle locking

Identification	Cable entry	Part number	Drawing (dimensions in mm)
Han® HPR , Hoods, Top entry, Pack contents: With seal screw 	1x M20 1x M25	19 40 003 0400 19 40 003 0401	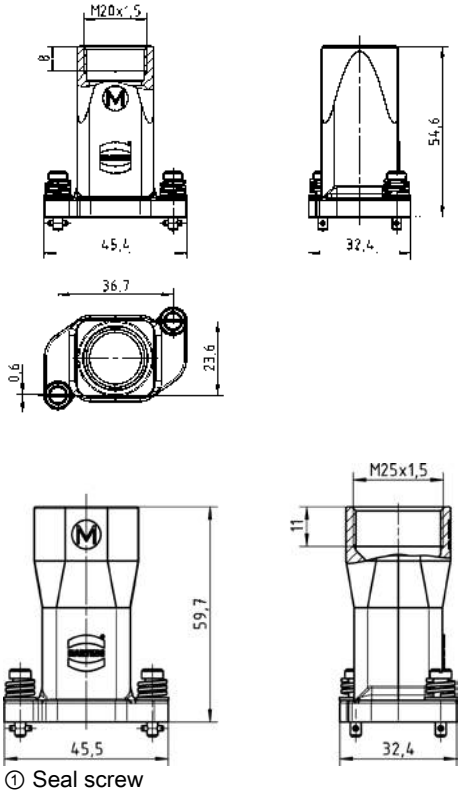 ① Seal screw
Han® HPR , Bulkhead mounted housings, Straight, Pack contents: With seal screw 		09 40 003 0301	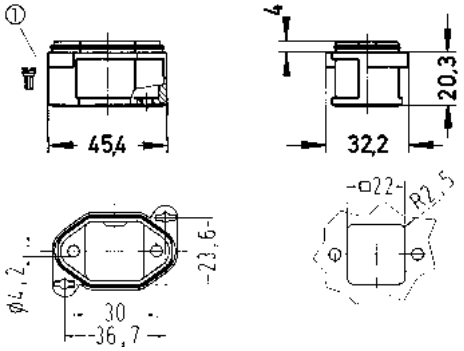 ① Seal screw

Han® 3 HPR - chromated

Size 3 A

Identification	Cable entry	Part number	Drawing (dimensions in mm)
Han® HPR , Protection cover, for hoods 		09 40 003 5403	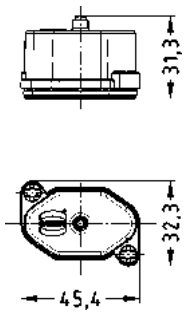
Han® HPR , Protection cover, for hoods, With fixing cord 		09 40 003 5404	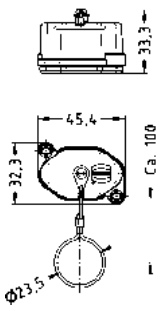
Han® HPR , Protection cover, for bulkhead mounted housings, for surface mounted housings 		09 40 003 5401	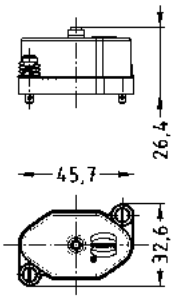
Han® HPR , Protection cover, for bulkhead mounted housings, for surface mounted housings, With fixing cord 		09 40 003 5402	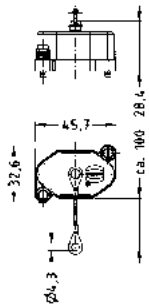

Han® 3 HPR - chromated

Size 3 A

Identification	Cable entry	Part number	Drawing (dimensions in mm)
Han® HPR , Adapter, Open bottom, for assembly of bulkhead mounted bulkhead mounted position, Top entry 	1x M20	19 40 003 0900	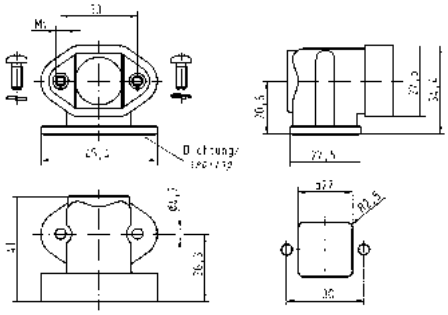
Han® HPR , Adapter, Open bottom, for assembly of bulkhead mounted bulkhead mounted position 		09 40 003 0902	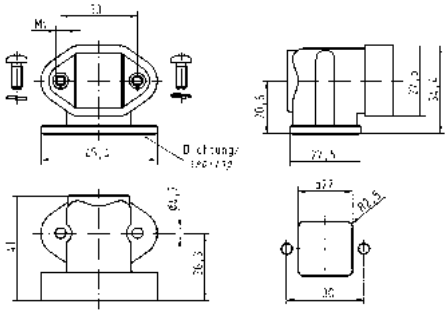

Hoods/housings for harsh outdoor environments
Screw locking

Identification	Cable entry	Part number	Drawing (dimensions in mm)
Han® HPR , Hoods, Top entry, Pack contents: With seal screw 	1x M20 1x M25	19 40 003 0410 19 40 003 0411	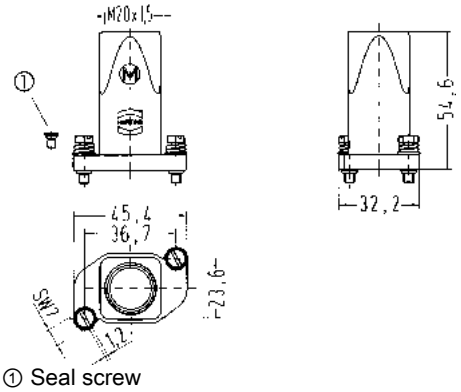
Han® HPR , Bulkhead mounted housings, Straight, Pack contents: With seal screw 		09 40 003 0311	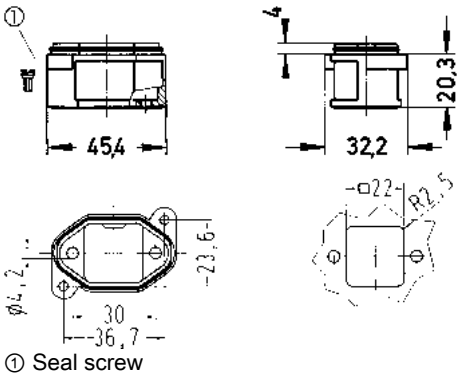

Han® 3 HPR - chromated

Size 3 A

Identification	Cable entry	Part number	Drawing (dimensions in mm)
Han® HPR , Bulkhead mounted housings, Angled, Open bottom, Feed through hole for fixing screws, Pack contents: With seal screw 		09 40 003 0950	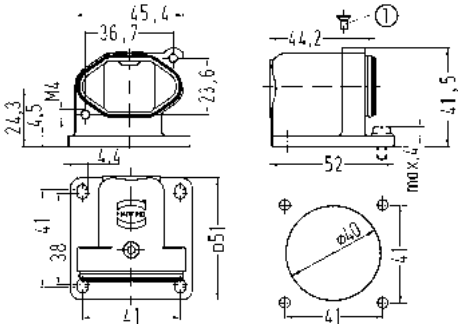 ① Seal screw
Han® HPR , Bulkhead mounted housings, Angled, Long version, Open bottom, Feed through hole for fixing screws, Pack contents: With seal screw 		09 40 003 0951	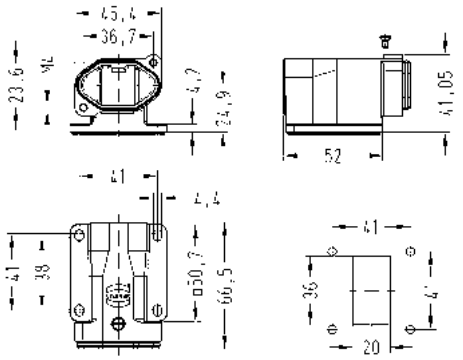
Han® HPR , Bulkhead mounted housings, Angled, Long version, Open bottom, Tapped blind hole for fixing screws, Pack contents: With seal screw 		09 40 003 0953	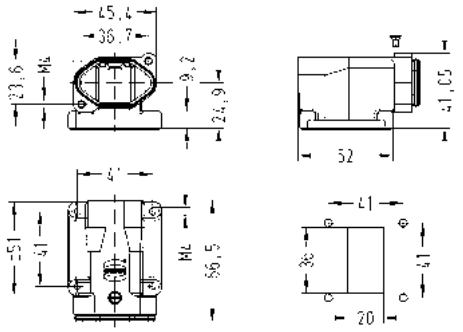
Han® HPR , Surface mounted housing, Bottom closed, Feed through hole for fixing screws, Top entry, Pack contents: With seal screw 	1x M20	19 40 003 0950	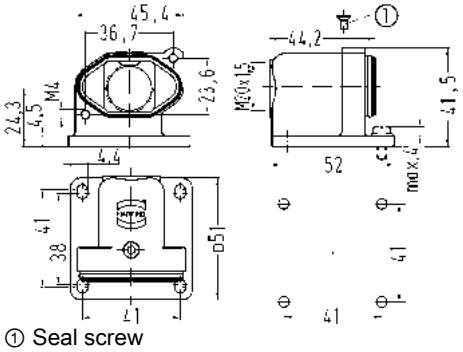 ① Seal screw

Han® 3 HPR - chromated

Size 3 A

Identification	Cable entry	Part number	Drawing (dimensions in mm)
Han® HPR , Surface mounted housing, Long version, Bottom closed, Feed through hole for fixing screws, Top entry, Pack contents: With seal screw 	1x M25	19 40 003 0951	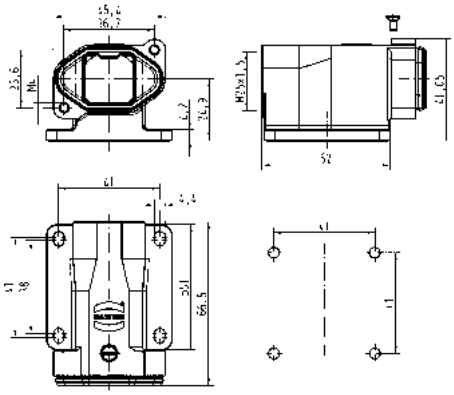
Han® HPR , Surface mounted housing, Long version, Bottom closed, Tapped blind hole for fixing screws, Top entry, Pack contents: With seal screw 	1x M25	19 40 003 0953	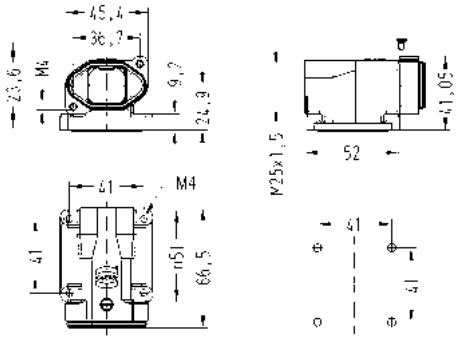
Han® HPR , Protection cover, for hoods 		09 40 003 5413	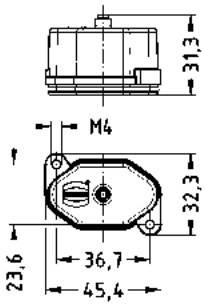
Han® HPR , Protection cover, for hoods, With fixing cord 		09 40 003 5414	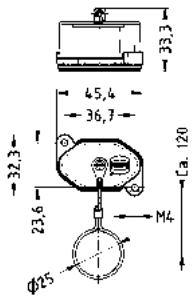

Identification	Cable entry	Part number	Drawing (dimensions in mm)
Han® HPR , Protection cover, for bulkhead mounted housings, for surface mounted housings 		09 40 003 5411	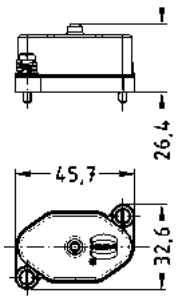
Han® HPR , Protection cover, for bulkhead mounted housings, for surface mounted housings, With fixing cord 		09 40 003 5412	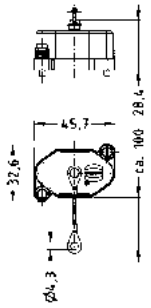
Han® HPR , Adapter, Open bottom, for assembly of bulkhead mounted bulkhead mounted position, Top entry 	1x M20	19 40 003 0900	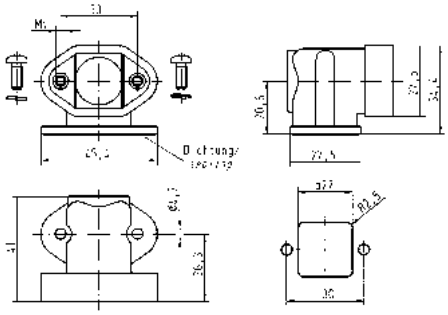
Han® HPR , Adapter, Open bottom, for assembly of bulkhead mounted bulkhead mounted position 		09 40 003 0902	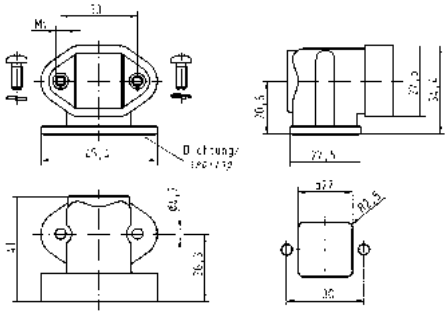

Features

- Hoods/housings for harsh outdoor environments
- Metal hoods and housings with excellent corrosion resistance
- Corrosion resistance ASTM B117-09 (500 h)
- Excellent EMC characteristics
- Screw locking M6
- Field of application: for external electrical interconnections in vehicles, in highly demanding environments and wet areas, as well as for sensitive interconnections that have to be shielded
- Distinguishing feature: colour-coded black, internal seal

Technical characteristics

Limiting temperature	-40 ... +125 °C
Tightening torque (screw locking)	4 Nm
Degree of protection acc. to IEC 60529	IP65, IP68, IP69 / IPX9K acc. to ISO 20653
Type rating acc. to UL 50 / UL 50E	4, 4X, 12
Material (hood/housing)	Aluminium die-cast, Corrosion resistant
Surface (hood/housing)	Powder-coated
Colour (hood/housing)	RAL 9005 (jet black)
Material (seal)	NBR
Material (locking)	Stainless steel
RoHS	compliant, compliant with exemption
RoHS exemptions	**6c:** Copper alloy containing up to 4 % lead by weight

Specifications and approvals

UL 1977 ECBT2.E235076
CSA-C22.2 No. 182.3 ECBT8.E235076
DNV GL

Hoods/housings for harsh outdoor environments
Toggle locking

Identification	Cable entry	Part number	Drawing (dimensions in mm)
Han® HPR , Hoods, Top entry 	1x M25	19 40 006 0401	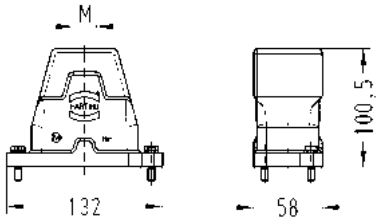
Han® HPR , Hoods, Side entry 	1x M25	19 40 006 0501	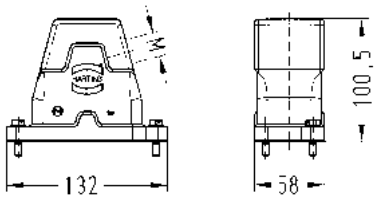
Han® HPR , Bulkhead mounted housings 		09 40 006 0301	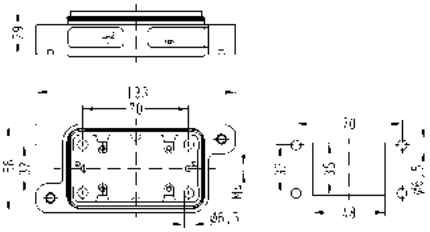
Han® HPR , Protection cover, for hoods 		09 40 006 5404	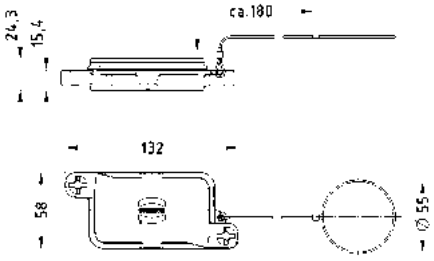

Identification	Cable entry	Part number	Drawing (dimensions in mm)
Han® HPR , Protection cover, for bulkhead mounted housings, for surface mounted housings 		09 40 006 5401	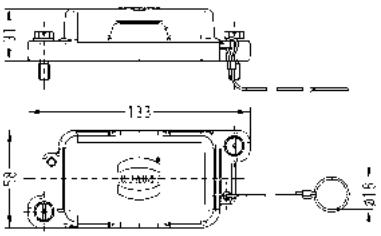

Hoods/housings for harsh outdoor environments
Screw locking

Identification	Cable entry	Part number	Drawing (dimensions in mm)
Han® HPR , Hoods, Top entry 	1x M20 1x M25 1x M32 1x M40	19 40 006 0410 19 40 006 0411 19 40 006 0412 19 40 006 0413	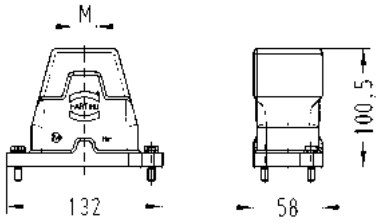
Han® HPR , Hoods, With adapter, Top entry 	1x M40	19 40 006 0418	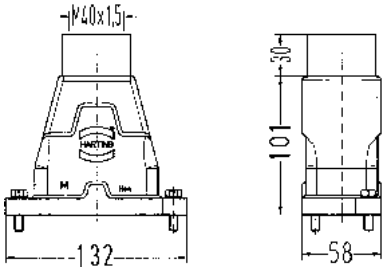
Han® HPR , Hoods, Side entry 	1x M20 1x M25 1x M32 1x M40	19 40 006 0510 19 40 006 0511 19 40 006 0512 19 40 006 0513	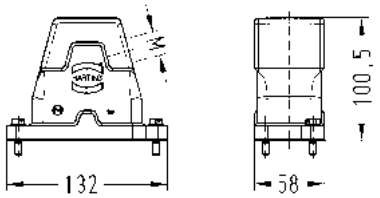
Han® HPR , Hoods, Without cable entry 		09 40 006 0811	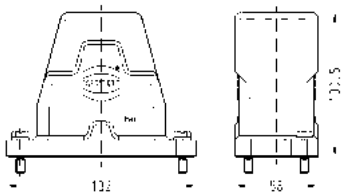
Han® HPR , Bulkhead mounted housings 		09 40 006 0311	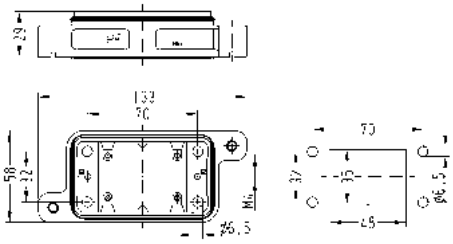

Han® HPR hoods/housings

Size 6 B

Identification	Cable entry	Part number	Drawing (dimensions in mm)
Han® HPR , Bulkhead mounted housings, With metal cover 		09 40 006 0317	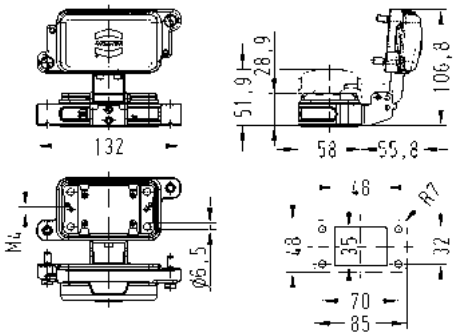
Han® HPR , Surface mounted housing, Horizontal version, Top entry 	1x M25 1x M40	19 40 006 0911 19 40 006 0913	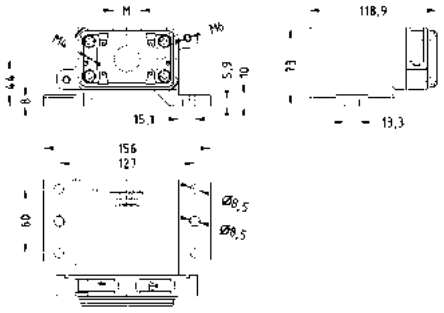
Han® HPR , Surface mounted housing, Top entry 	1x M32 1x M40	19 40 006 1212 19 40 006 1213	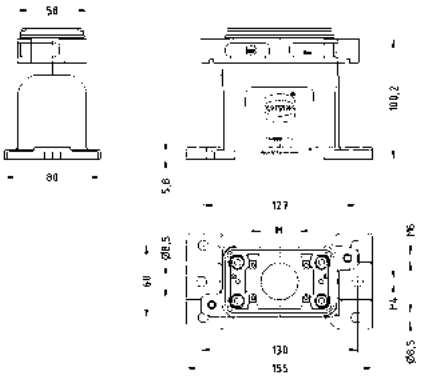
Han® HPR , Surface mounted housing, Side entry	1x M20 1x M25 1x M32	19 40 006 1260 19 40 006 1261 19 40 006 1262	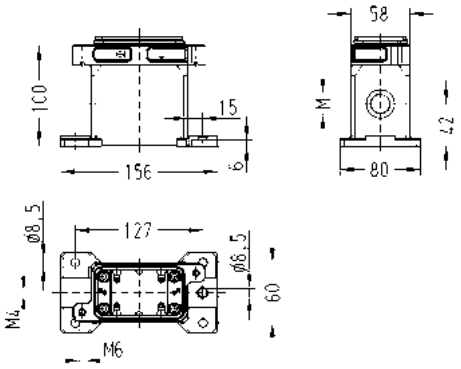

Identification	Cable entry	Part number	Drawing (dimensions in mm)
Han® HPR , Panel feed through housing, for mounting from inside, Top entry 	1x M32 1x M40	19 40 006 1112 19 40 006 1113	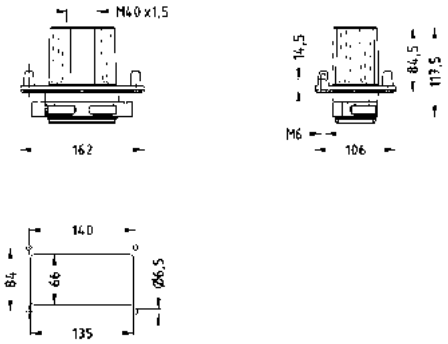
Han® HPR , Panel feed through housing, for mounting from outside, Top entry  The fixing screws must be sealed separately to reach the given degree of protection.	1x M32 1x M40	19 40 006 1117 19 40 006 1118	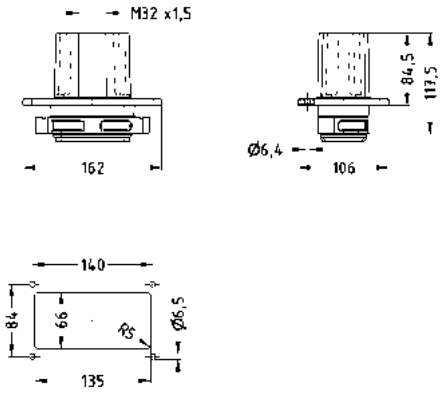
Han® HPR , Protection cover, for hoods 		09 40 006 5414	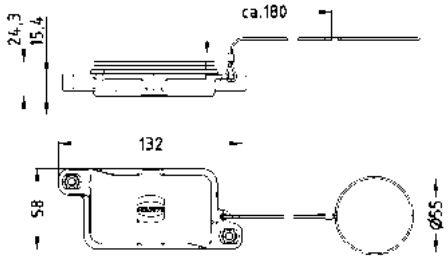
Han® HPR , Protection cover, for bulkhead mounted housings, for surface mounted housings 		09 40 006 5411	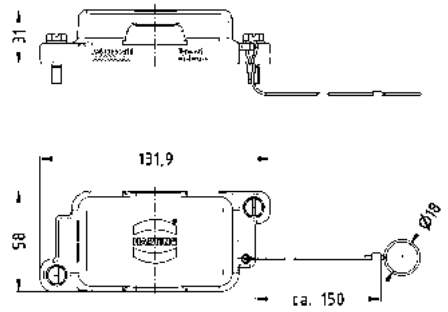

Han® HPR hoods/housings

Size 10 B

Hoods/housings for harsh outdoor environments
Toggle locking

Identification	Cable entry	Part number	Drawing (dimensions in mm)
Han® HPR , Hoods, Top entry 	1x M25	19 40 010 0401	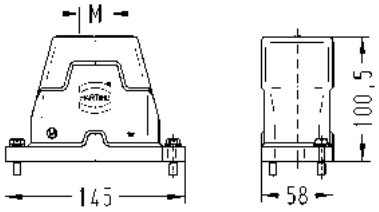
Han® HPR , Hoods, Side entry 	1x M25	19 40 010 0501	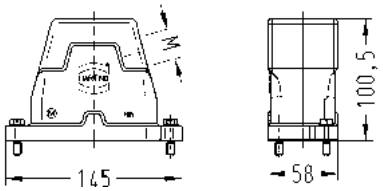
Han® HPR , Bulkhead mounted housings 		09 40 010 0301	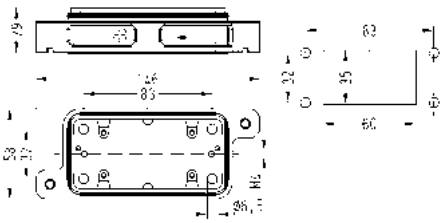
Han® HPR , Protection cover, for hoods 		09 40 010 5404	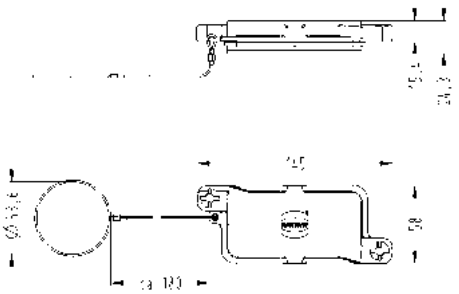

Identification	Cable entry	Part number	Drawing (dimensions in mm)
Han® HPR , Protection cover, for bulkhead mounted housings, for surface mounted housings 		09 40 010 5401	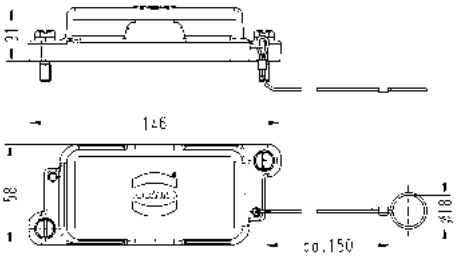

Han® HPR hoods/housings

Size 10 B

Hoods/housings for harsh outdoor environments
Screw locking

Identification	Cable entry	Part number	Drawing (dimensions in mm)
Han® HPR , Hoods, Top entry 	1x M25 1x M32 1x M40 2x M20	19 40 010 0411 19 40 010 0412 19 40 010 0413 19 40 010 0430	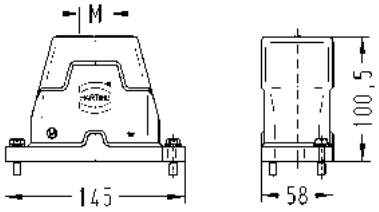
Han® HPR , Hoods, Side entry 	1x M25 1x M32 1x M40	19 40 010 0511 19 40 010 0512 19 40 010 0513	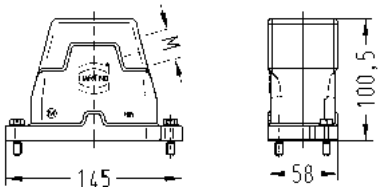
Han® HPR , Hoods, Without cable entry 		09 40 010 0811	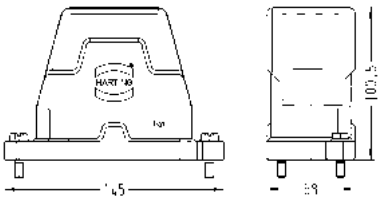
Han® HPR , Bulkhead mounted housings 		09 40 010 0311	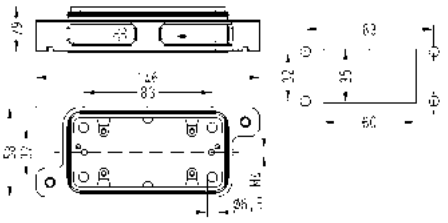

Identification	Cable entry	Part number	Drawing (dimensions in mm)
Han® HPR , Bulkhead mounted housings, With metal cover 		09 40 010 0317	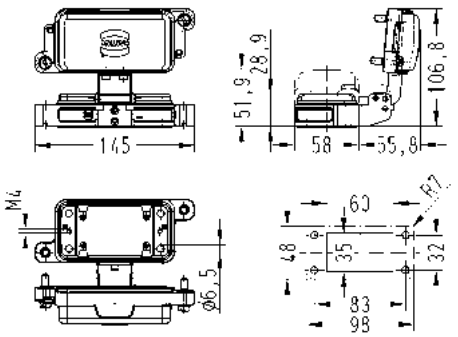
Han® HPR , Surface mounted housing, Side entry 	1x M20 1x M32 1x M40 2x M25 2x M32	19 40 010 1260 19 40 010 1262 19 40 010 1263 19 40 010 1271 19 40 010 1272	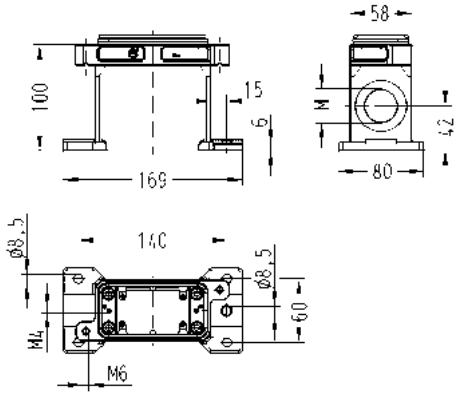
Han® HPR , Panel feed through housing, for mounting from inside, Top entry 	1x M40	19 40 010 1113	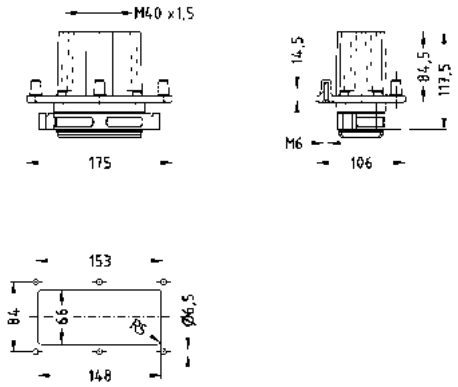
Han® HPR , Panel feed through housing, for mounting from outside, Top entry  The fixing screws must be sealed separately to reach the given degree of protection.	1x M40	19 40 010 1118	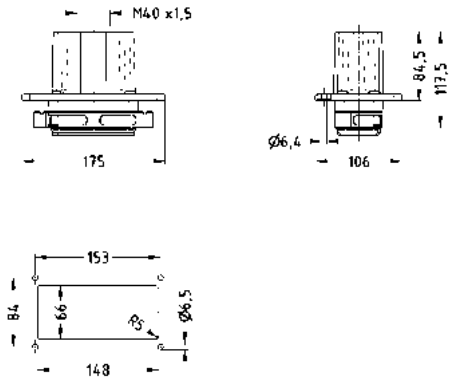

Identification	Cable entry	Part number	Drawing (dimensions in mm)
Han® HPR , Protection cover, for hoods 		09 40 010 5414	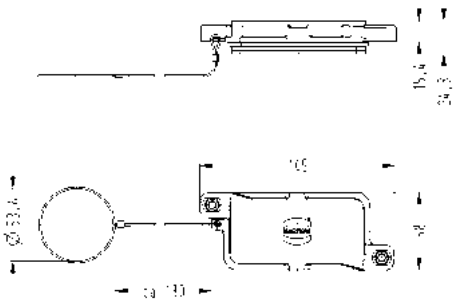
Han® HPR , Protection cover, for bulkhead mounted housings, for surface mounted housings 		09 40 010 5411	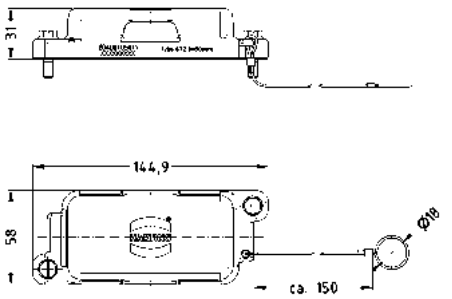

Hoods/housings for harsh outdoor environments
Toggle locking

Identification	Cable entry	Part number	Drawing (dimensions in mm)
Han® HPR , Hoods, Top entry 	1x M32	19 40 016 0402	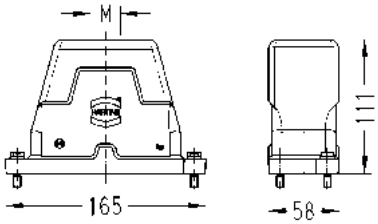
Han® HPR , Hoods, Side entry 	1x M32	19 40 016 0502	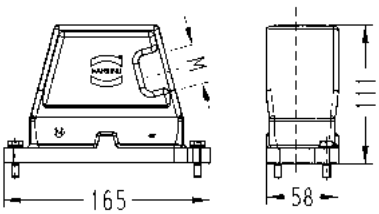
Han® HPR , Bulkhead mounted housings 		09 40 016 0301	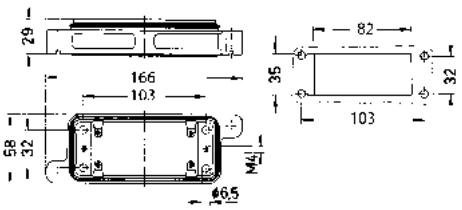
Han® HPR , Protection cover, for hoods 		09 40 016 5404	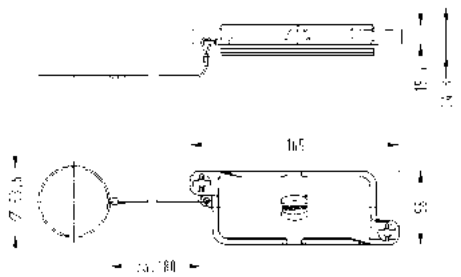

Identification	Cable entry	Part number	Drawing (dimensions in mm)
Han® HPR , Protection cover, for bulkhead mounted housings, for surface mounted housings 		09 40 016 5401	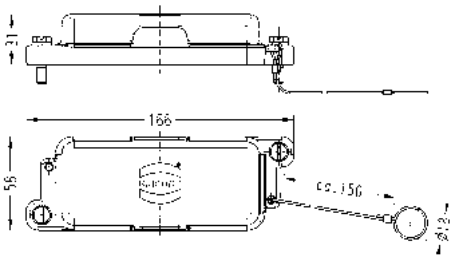

Hoods/housings for harsh outdoor environments
Screw locking

Identification	Cable entry	Part number	Drawing (dimensions in mm)
Han® HPR , Hoods, Top entry 	1x M25 1x M32 1x M40 1x M50 2x M25	19 40 016 0411 19 40 016 0412 19 40 016 0413 19 40 016 0414 19 40 016 0431	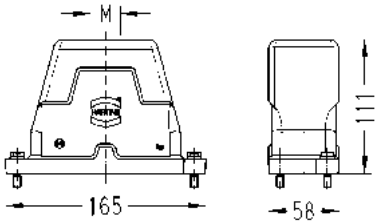
Han® HPR , Hoods, Side entry 	1x M20 1x M25 1x M32 1x M40 1x M50	19 40 016 0510 19 40 016 0511 19 40 016 0512 19 40 016 0513 19 40 016 0514	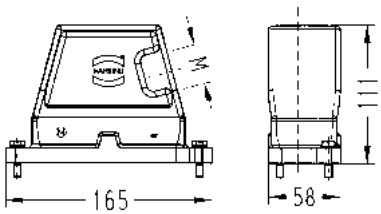
Han® HPR , Hoods, Without cable entry 		09 40 016 0811	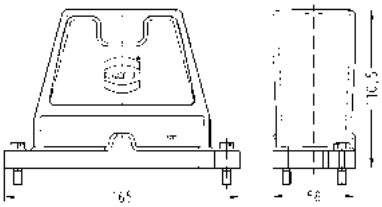
Han® HPR , Bulkhead mounted housings 		09 40 016 0311	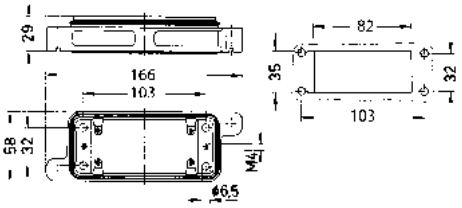
Han® HPR , Bulkhead mounted housings, With metal cover 		09 40 016 0317	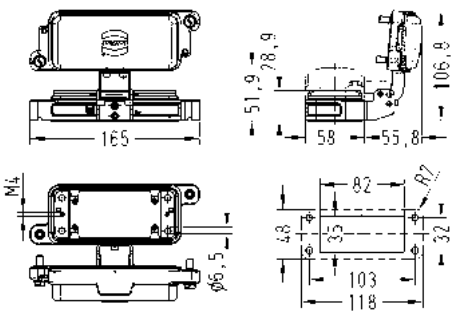

Han® HPR hoods/housings

Size 16 B

Identification	Cable entry	Part number	Drawing (dimensions in mm)
Han® HPR , Surface mounted housing, Horizontal version, Top entry 	1x M32 2x M32	19 40 016 0912 19 40 016 0922	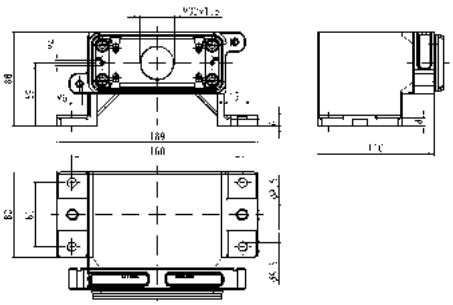
Han® HPR , Surface mounted housing, Side entry 	1x M25 1x M32 1x M40 2x M40	19 40 016 1261 19 40 016 1262 19 40 016 1263 19 40 016 1273	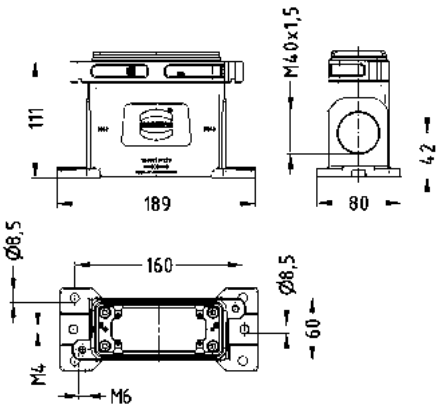
Han® HPR , Surface mounted housing, Without cable entry 		09 40 016 1201	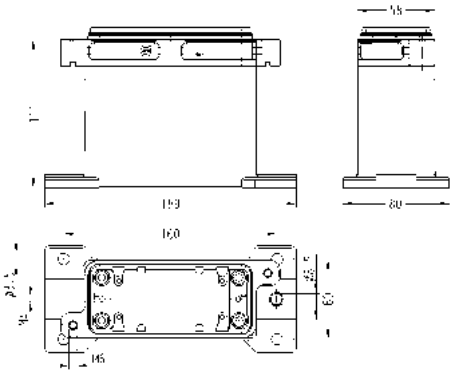
Han® HPR , Panel feed through housing, for mounting from inside, Top entry 	1x M40 1x M50	19 40 016 1113 19 40 016 1114	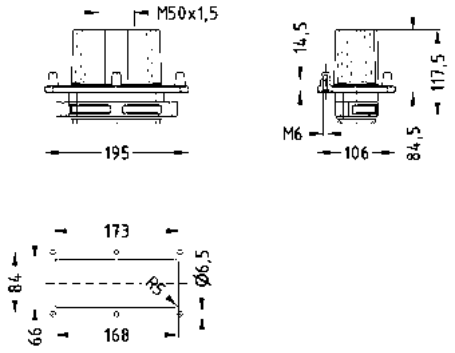

Identification	Cable entry	Part number	Drawing (dimensions in mm)
Han® HPR , Panel feed through housing, for mounting from outside, Top entry  The fixing screws must be sealed separately to reach the given degree of protection.	1x M40 1x M50 2x M25	19 40 016 1118 19 40 016 1119 19 40 016 1134	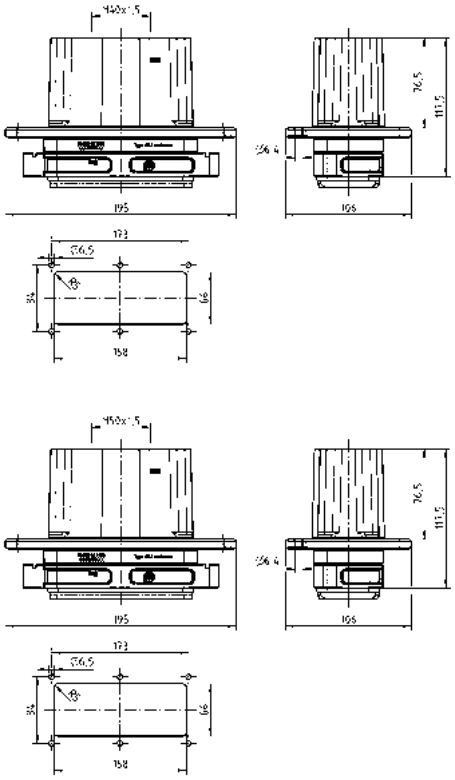
Han® HPR , Protection cover, for hoods 		09 40 016 5414	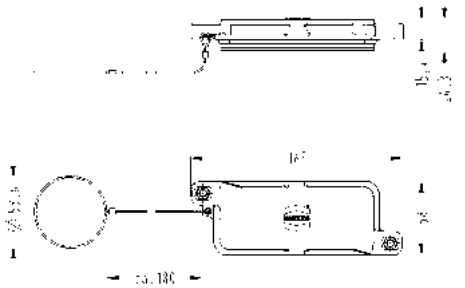
Han® HPR , Protection cover, for bulkhead mounted housings, for surface mounted housings 		09 40 016 5411	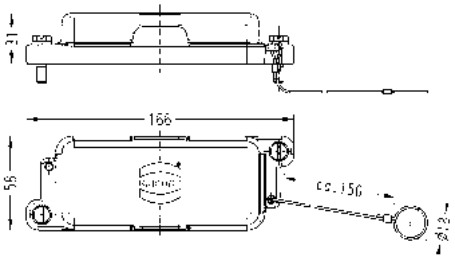

Hoods/housings for harsh outdoor environments
Toggle locking

Identification	Cable entry	Part number	Drawing (dimensions in mm)
Han® HPR , Hoods, Top entry 	1x M32 1x M63	19 40 024 0402 19 40 024 0410	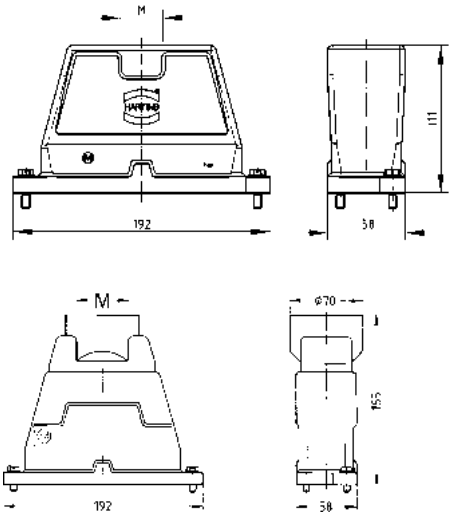
Han® HPR , Hoods, Side entry 	1x M40	19 40 024 0503	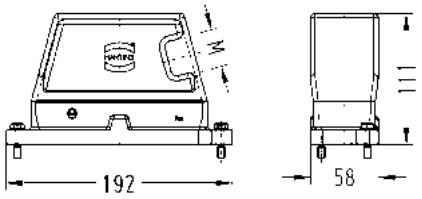
Han® HPR , Bulkhead mounted housings 		09 40 024 0301	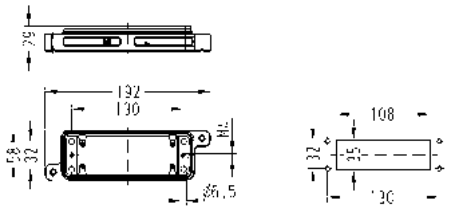
Han® HPR , Protection cover, for hoods 		09 40 024 5404	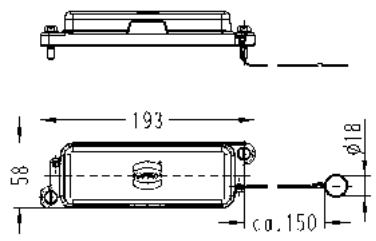

Identification	Cable entry	Part number	Drawing (dimensions in mm)
Han® HPR , Protection cover, for bulkhead mounted housings, for surface mounted housings 		09 40 024 5401	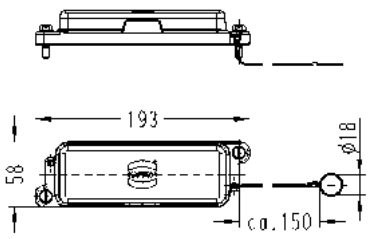

Han® HPR hoods/housings

Size 24 B

Hoods/housings for harsh outdoor environments
Screw locking

Identification	Cable entry	Part number	Drawing (dimensions in mm)
Han® HPR , Hoods, Top entry 	1x M32 1x M40 1x M50 2x M25 2x M32 2x M40 3x M25 3x M25, 1x M20 4x M20 4x M25	19 40 024 0412 19 40 024 0413 19 40 024 0414 19 40 024 0431 19 40 024 0432 19 40 024 0433 19 40 024 0461 19 40 024 0471 19 40 024 0473 19 40 024 0474	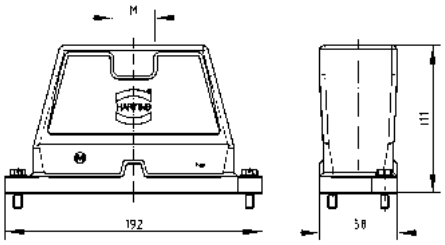
Han® HPR , Hoods, Top entry, High construction 	1x M50 3x M32 4x M25	19 40 024 0419 19 40 024 0467 19 40 024 0477	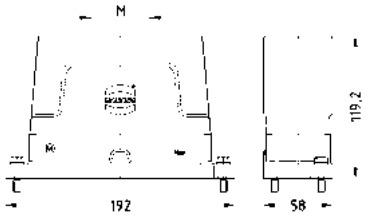
Han® HPR , Hoods, Special type, Top entry 	1x M63	19 40 024 0420	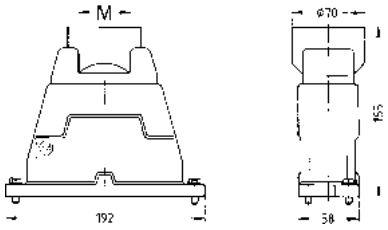
Han® HPR , Hoods, With adapter, Top entry 	2x M40	19 40 024 0438	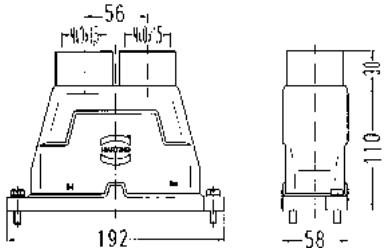

Identification	Cable entry	Part number	Drawing (dimensions in mm)
Han® HPR , Hoods, Side entry 	1x M32 1x M40 1x M50	19 40 024 0512 19 40 024 0513 19 40 024 0514	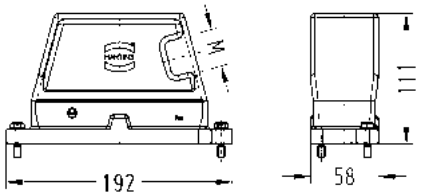
Han® HPR , Hoods, Side entry, High construction 	2x M32	19 40 024 0537	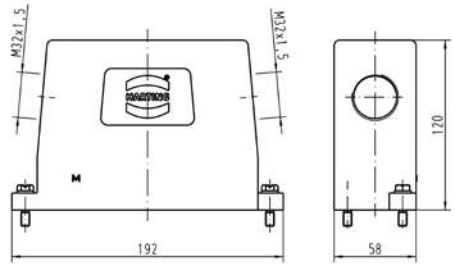
Han® HPR , Hoods, Special type, Angled entry 	3x M25	19 40 024 0631	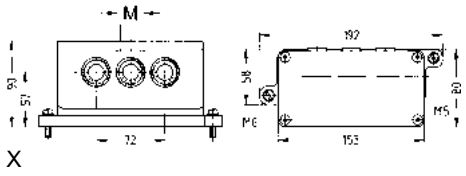
Han® HPR , Hoods, Without cable entry 		09 40 024 0811	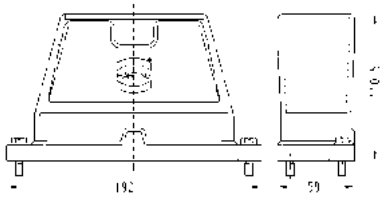
Han® HPR , Bulkhead mounted housings 		09 40 024 0311	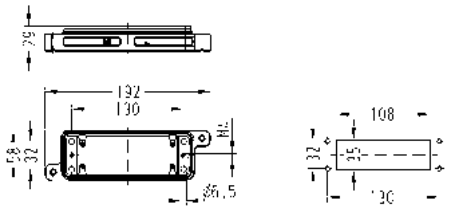
Han® HPR , Bulkhead mounted housings, With metal cover 		09 40 024 0317	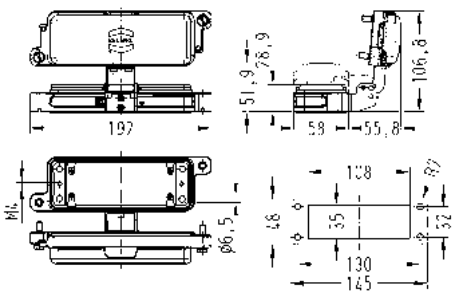

Han® HPR hoods/housings

Size 24 B

Identification	Cable entry	Part number	Drawing (dimensions in mm)
Han® HPR , Surface mounted housing, Horizontal version, Top entry 	1x M50 2x M32 3x M25 3x M25, 1x M20 4x M25	19 40 024 0914 19 40 024 0925 19 40 024 0931 19 40 024 0971 19 40 024 0941	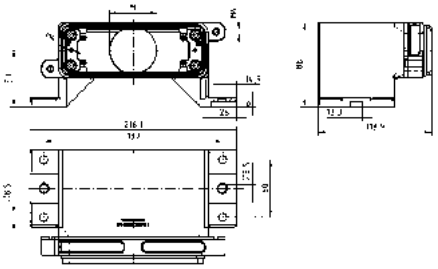
Han® HPR , Surface mounted housing, Top entry 	3x M25 3x M25, 1x M20 4x M25	19 40 024 1231 19 40 024 1271 19 40 024 1242	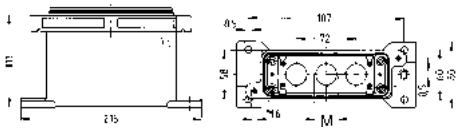
Han® HPR , Surface mounted housing, Side entry 	1x M40 2x M40 2x M50	19 40 024 1263 19 40 024 1273 19 40 024 1274	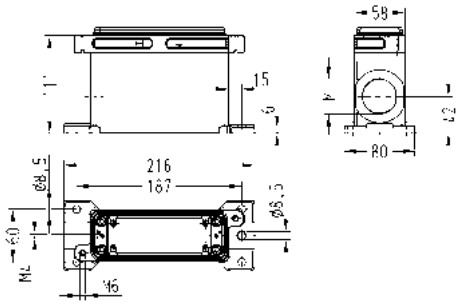
Han® HPR , Panel feed through housing, for mounting from inside, Top entry 	1x M40 1x M50	19 40 024 1113 19 40 024 1114	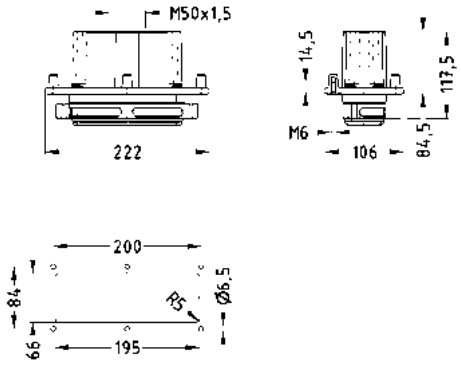

Identification	Cable entry	Part number	Drawing (dimensions in mm)
Han® HPR , Panel feed through housing, for mounting from outside, Top entry  The fixing screws must be sealed separately to reach the given degree of protection.	1x M40 1x M50 2x M32	19 40 024 1118 19 40 024 1119 19 40 024 1135	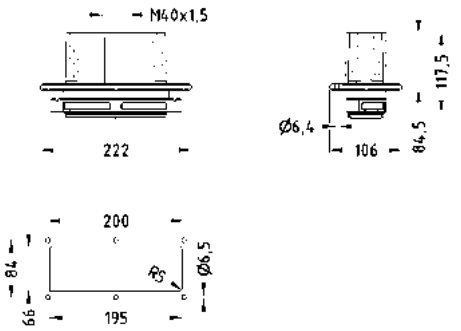
Han® HPR , Protection cover, for hoods 		09 40 024 5414	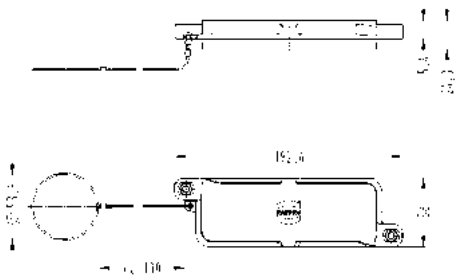
Han® HPR , Protection cover, for bulkhead mounted housings, for surface mounted housings 		09 40 024 5411	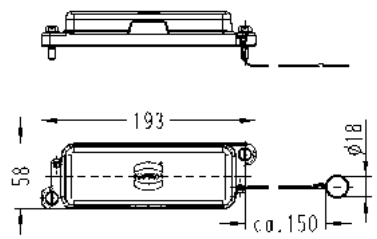

Features

- Hoods/housings for harsh environments
- Extremely resistant to chemicals and other aggressive influences
- Made completely from high-quality stainless steel
- Extremely resistant to corrosion

Technical characteristics

Limiting temperature	-40 ... +125 °C
Degree of protection acc. to IEC 60529	IP67, IP65
Type rating acc. to UL 50 / UL 50E	4, 4X, 12
Material (hood/housing)	Stainless steel
Surface (hood/housing)	Uncoated
Colour (hood/housing)	Unpainted
Material (seal)	NBR
Material (locking)	Stainless steel
RoHS	compliant

Specifications and approvals

UL 1977 ECBT2.E235076
CSA-C22.2 No. 182.3 ECBT8.E235076
DNV GL

Hoods/housings for harsh environments
Single locking lever

Identification	Cable entry	Part number	Drawing (dimensions in mm)
Han-INOX® , Hoods, Top entry 	1x M20	19 44 003 1440	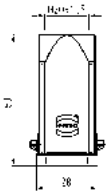
Han-INOX® , Hoods, Side entry 	1x M20	19 44 003 1640	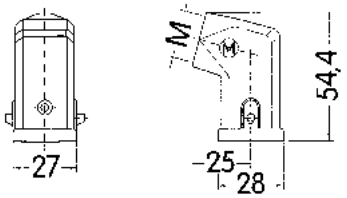
Han-INOX® , Screw mounted housings, Top entry, Pack contents: 1x M20 stainless steel screw nut 	1x M20	19 44 003 1150	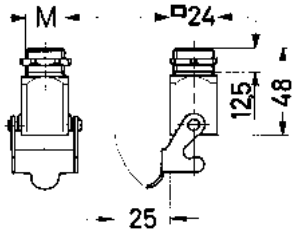
Han-INOX® , Bulkhead mounted housings, Straight 		19 44 003 0301	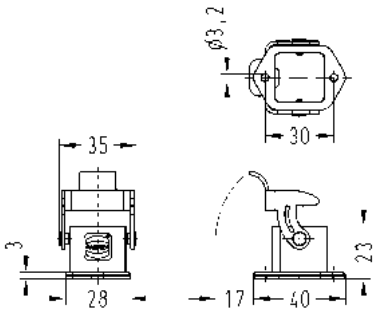 Panel cut out 22 x 22 mm

Identification	Cable entry	Part number	Drawing (dimensions in mm)
Han-INOX® , Bulkhead mounted housings, Straight, With metal cover  for mounted male insert		19 44 003 0305	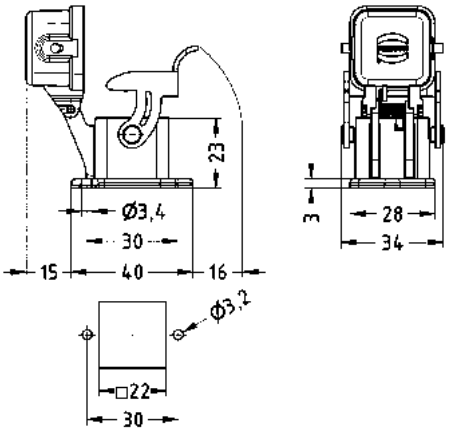 Panel cut out 22 x 22 mm
Han-INOX® , Bulkhead mounted housings, Straight, With metal cover, With seal  for mounted female insert or for mounted Han-Brid® insert		19 44 003 0306	
Han-INOX® , Bulkhead mounted housings, Angled 		19 44 003 0801	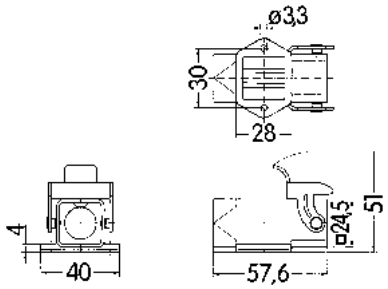 Panel cut out 22 x 22 mm
Han-INOX® , Surface mounted housing, Side entry 	1x M20	19 44 003 1250	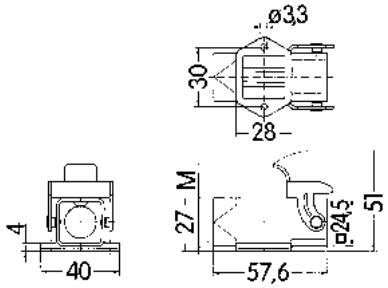

Identification	Cable entry	Part number	Drawing (dimensions in mm)
Han-INOX® , Cable to cable housing, Top entry 	1x M20	19 44 003 1750	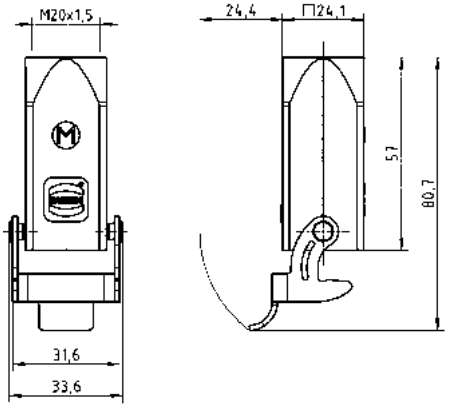
Han-INOX® , Protection cover, for hoods, Metal, With fixing cord  for mounted female insert or for mounted Han-Brid® insert		19 44 003 5421	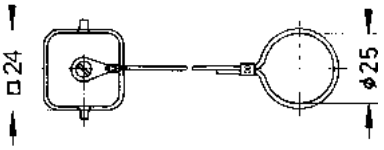
Han-INOX® , Protection cover, for hoods, Metal, With fixing cord  for mounted male insert		19 44 003 5422	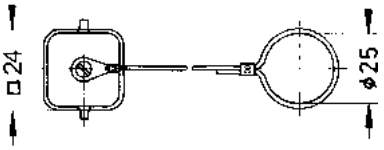
Han-INOX® , Protection cover, for bulkhead mounted housings, for surface mounted housings, for cable to cable housing, Metal, With fixing cord  for mounted female insert or for mounted Han-Brid® insert		19 44 003 5425	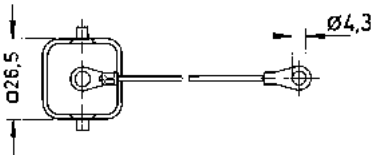

Identification	Cable entry	Part number	Drawing (dimensions in mm)
Han-INOX® , Protection cover, for bulkhead mounted housings, for surface mounted housings, for cable to cable housing, Metal, With fixing cord  for mounted male insert		19 44 003 5426	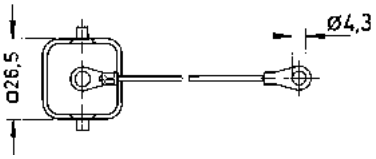

Hoods/housings for harsh environments
Single locking lever

Identification	Cable entry	Part number	Drawing (dimensions in mm)
Han-INOX® , Hoods, Top entry 	1x M32	19 44 310 0447	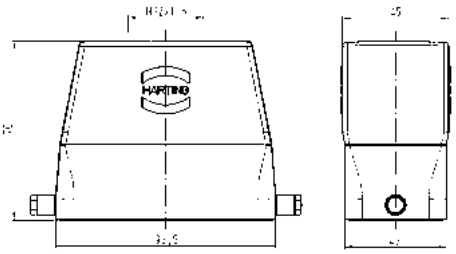
Han-INOX® , Hoods, Side entry 	1x M20 1x M25 1x M32	19 44 310 0545 19 44 310 0546 19 44 310 0547	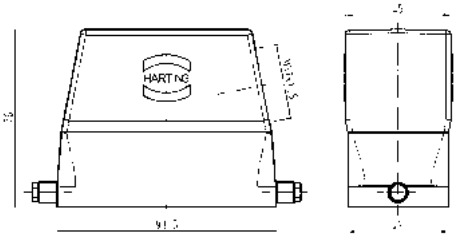
Han-INOX® , Bulkhead mounted housings 		19 44 310 0305	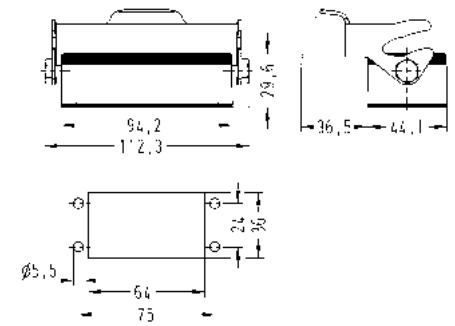 Panel cut out
Han-INOX® , Bulkhead mounted housings, With metal cover 		19 44 310 0303	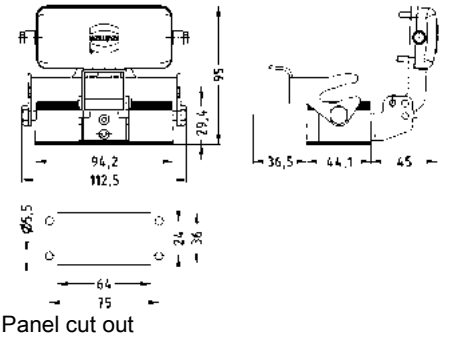 Panel cut out

Han-INOX® hoods/housings

Size 10 B

Identification	Cable entry	Part number	Drawing (dimensions in mm)
Han-INOX® , Cable to cable housing, Top entry 	1x M32	19 44 310 0757	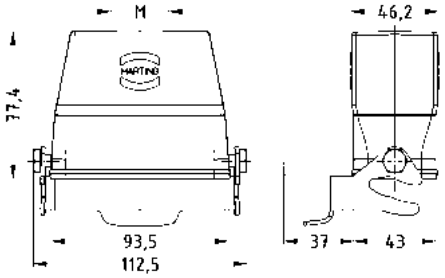
Han-INOX® , Protection cover, for hoods, Metal, With fixing cord 		19 44 310 5422	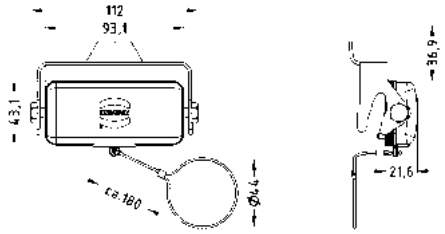
Han-INOX® , Protection cover, for bulkhead mounted housings, for cable to cable housing, Metal 		19 44 310 5421	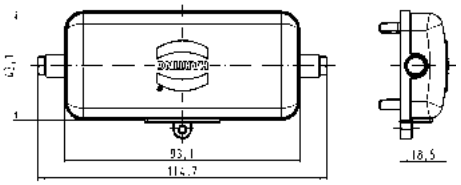
Han-INOX® , Protection cover, for bulkhead mounted housings, for cable to cable housing, Metal, With fixing cord 		19 44 310 5423	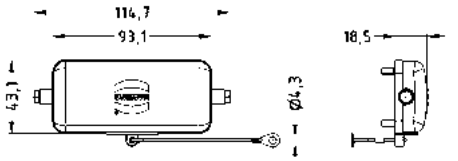

Technical characteristics

Material (seal)	NBR
Colour (seal)	Black

Technical characteristics

Material (cable glands)	Metal
Material (clamping ring)	Polyamide
RoHS	compliant

Identification	Size	Clamping range (mm)	Size	Part number	Drawing (dimensions in mm)
Han-INOX® , Flange gasket 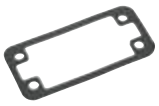			10 B	19 44 000 9902	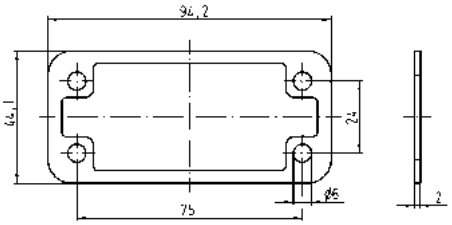
Han-INOX® , Cable gland 	M20 M25 M32 M40	6 ... 13 9 ... 17 13 ... 21 16 ... 28		19 44 000 5082 19 44 000 5083 19 44 000 5084 19 44 000 5085	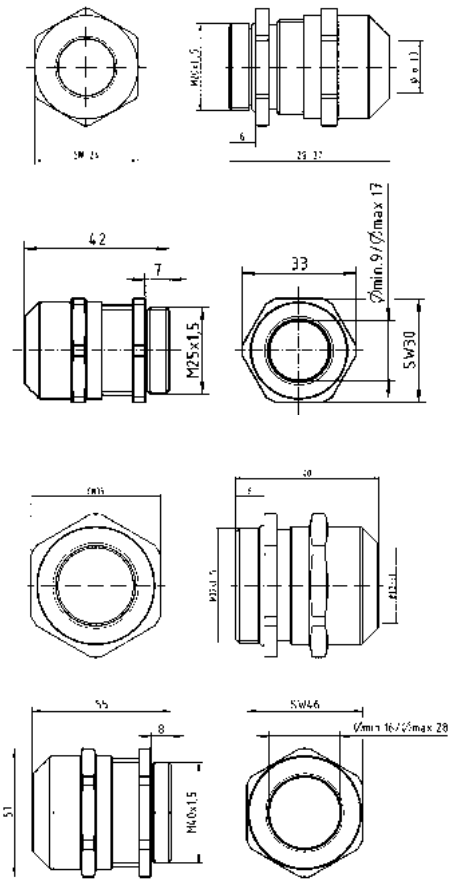



Photo courtesy: MAN Diesel & Turbo SE

HARTING Han® Hoods/Housings
for control of marine Diesel engines.

Han® Thermocouple

Contents	Page
Han D® crimp contacts	**41.2**
Han E® crimp contacts	**41.3**
Han A® screw termination	**41.4**
Han E® screw termination	**41.6**

Han D® crimp contacts

Features

- Suitable for Han D® / DD® inserts
- Can be combined with standard crimp contacts in one connector if needed
- Iron and constantan contacts according to IEC 60584 type J
- According to EUROMAP 14, Part 1

Technical characteristics

Contact resistance	≤1 mΩ
Material (contacts)	Iron, Constantan
RoHS	compliant

Specifications and approvals

EN 60664-1
IEC 61984

Details

Crimping tools see chapter 90

Remarks on the crimp technique

The wire gauges mentioned in the catalogue refer to geometric wire gauges of cables.

Identification	Conductor cross-section (mm²)	Part number Male	Part number Female	Drawing (dimensions in mm)
Han D® , Crimp contact, Iron Contact surface: Gold plated 	0,14 ... 0,37	09 15 000 6171	09 15 000 6271	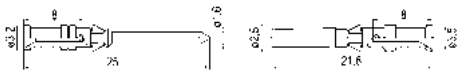 Stripping length 8 mm
Han D® , Crimp contact, Constantan 	0,14 ... 0,37	09 15 000 6161	09 15 000 6261	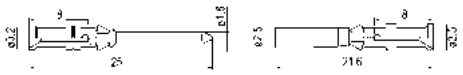 Stripping length 8 mm

Han E® crimp contacts

Features

- Suitable for Han E®, Han® EE / EEE, Han® Q and Han A® inserts
- Can be combined with standard crimp contacts in one connector if needed
- Iron and constantan contacts according to IEC 60584 type J
- According to EUROMAP 14, Part 1

Technical characteristics

Contact resistance	≤1 mΩ
Material (contacts)	Iron, Constantan
RoHS	compliant

Specifications and approvals

EN 60664-1
IEC 61984

Details

Crimping tools see chapter 90

Remarks on the crimp technique

The wire gauges mentioned in the catalogue refer to geometric wire gauges of cables.

Identification	Conductor cross-section (mm²)	Part number Male	Part number Female	Drawing (dimensions in mm)
Han E® , Crimp contact, Iron Contact surface: Gold plated	0,14 ... 0,37 0,5	09 33 000 6173 09 33 000 6172	09 33 000 6273 09 33 000 6272	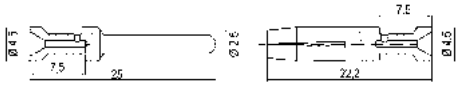 Stripping length 7.5 mm
Han E® , Crimp contact, Constantan	0,14 ... 0,37 0,5	09 33 000 6163 09 33 000 6162	09 33 000 6263 09 33 000 6262	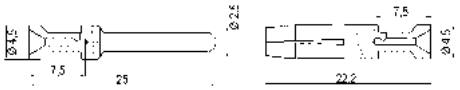 Stripping length 7.5 mm

Han A® screw termination

Features

- Connector for temperature measurement conductors - suitable for injection moulding machines
- Iron and constantan contacts according to IEC 60584 type J
- According to EUROMAP 14, Part 1

Technical characteristics

Number of contacts	16
Electrical data acc. to IEC 61984	16 A 250 V 4 kV 3
Rated current	16 A
Rated voltage	250 V
Rated impulse voltage	4 kV
Pollution degree	3
Rated voltage acc. to UL	600 V
Insulation resistance	≥10^{10} Ω
Limiting temperature	-40 ... +125 °C
Mating cycles	≥500
Material (insert)	Polycarbonate
Colour (insert)	RAL 7032 (pebble grey)
Material flammability class acc. to UL 94	V-0
RoHS	compliant

Specifications and approvals

EN 60664-1
IEC 61984
DNV GL

Number of contacts

16+

16 A 250 V 4 kV 3

Identification	Conductor cross-section (mm²)	Part number Male	Part number Female	Drawing (dimensions in mm)
Han® Thermocouple , Han A®, Screw termination 	1 ... 2,5	09 20 016 2691	09 20 016 2891	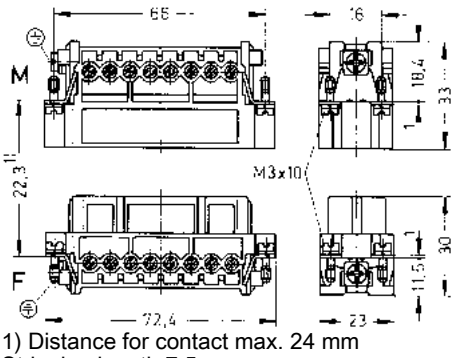 1) Distance for contact max. 24 mm Stripping length 7.5 mm Tightening torque 0.5 Nm 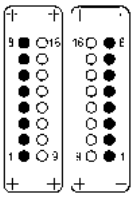 ◆ Fe ○ CuNi 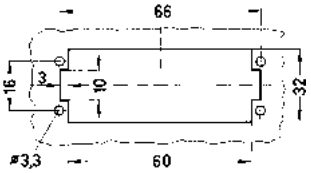 Panel cut out for use without Hoods/Housings

Han E® screw termination

Features

- Connector for temperature measurement conductors - suitable for injection moulding machines
- Iron and constantan contacts according to IEC 60584 type J
- According to EUROMAP 14, Part 1

Technical characteristics

Number of contacts	10, 16, 24
Electrical data acc. to IEC 61984	16 A 400 V 6 kV 3
Rated current	16 A
Rated voltage	400 V
Rated impulse voltage	6 kV
Pollution degree	3
Insulation resistance	≥10^{10} Ω
Limiting temperature	-40 ... +125 °C
Mating cycles	≥500
Material (insert)	Polycarbonate
Colour (insert)	RAL 7032 (pebble grey)
Material flammability class acc. to UL 94	V-0
RoHS	compliant with exemption, compliant
RoHS exemptions	**6c:** Copper alloy containing up to 4 % lead by weight

Specifications and approvals

EN 60664-1
IEC 61984
DNV GL

Details

Tightening torque 0.5 Nm

Tightening torque PE screw 1.2 Nm

Number of contacts

10+ ⏚

16 A 400 V 6 kV 3

Identification	Conductor cross-section (mm²)	Part number Male	Part number Female	Drawing (dimensions in mm)
Han® Thermocouple , Han E®, Screw termination, With wire protection 	1 ... 2,5	09 33 010 2691	09 33 010 2791	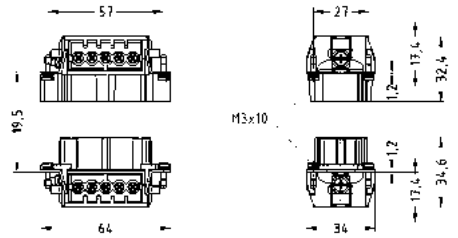 1) distance for contact max. 21 mm 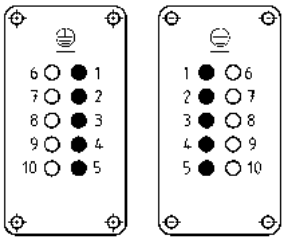 ◆ Fe ○ CuNi 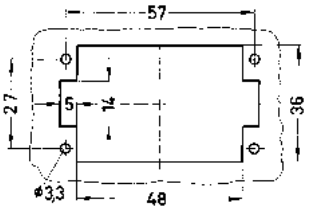 Panel cut out

Number of contacts

16+

16 A 400 V 6 kV 3

Identification	Conductor cross-section (mm²)	Part number Male	Part number Female	Drawing (dimensions in mm)
Han® Thermocouple , Han E®, Screw termination, With wire protection 	1 ... 2,5	09 33 016 2691	09 33 016 2791	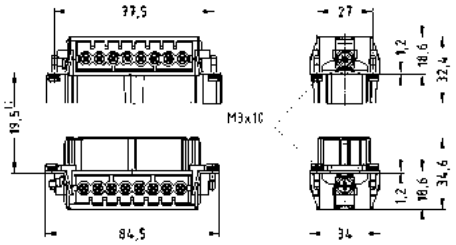 1) distance for contact max. 21 mm 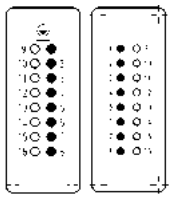 ◆ Fe ○ CuNi 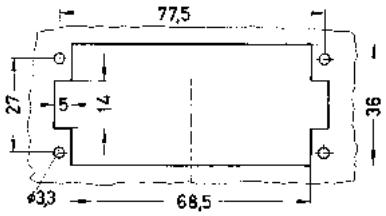 Panel cut out

Number of contacts

24+ ⏚

16 A 400 V 6 kV 3

Identification	Conductor cross-section (mm²)	Part number Male	Part number Female	Drawing (dimensions in mm)
Han® Thermocouple , Han E®, Screw termination, With wire protection  Also suitable for standard contacts	1 ... 2,5	09 33 024 2689	09 33 024 2789	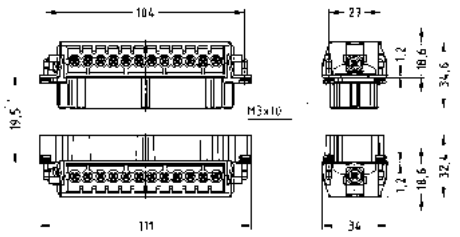 1) distance for contact max. 21 mm 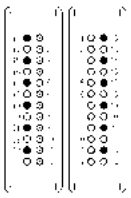 Standard contacts ◆ Fe ○ CuNi
Han® Thermocouple , Han E®, Screw termination, With wire protection 	1 ... 2,5	09 33 024 2691	09 33 024 2791	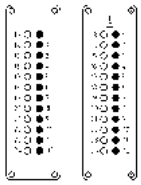 ◆ Fe ○ CuNi 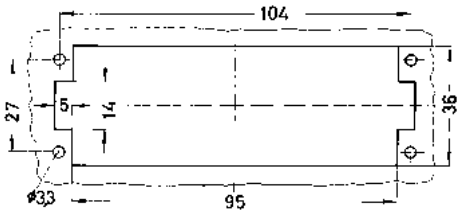 Panel cut out

Contents	Page
Modules	**42.5**
Hoods/Housings	**42.7**

Han® GND – Mateable Potential Equalization

The new Han® GND series now enables pluggable grounding systems.
Han® GND (Han® Ground) is the innovative HARTING solution for potential equalization. The new connector series makes it possible to execute grounding systems in a pluggable design for the first time.

The use of connectors has been well-established in the electrical cabling of machines and systems for many years. The advantage is quick and error-free commissioning. Potential equalization lines are still being permanently connected, which is relatively time-consuming and can be subject to errors. HARTING's remedy: the Han® GND. The single-pole connector in the robust IP65 plastic housing is designed for stranded wires from 10 - 35 mm² and is optionally available in crimp or axial screw termination. The latter has the advantage that the lines can be connected without a special tool. A simple screwdriver is all it takes to achieve a quick and easy reliable connection. Extra connector mating security can be provided by the use of additional locking elements that prevent unintentional opening.

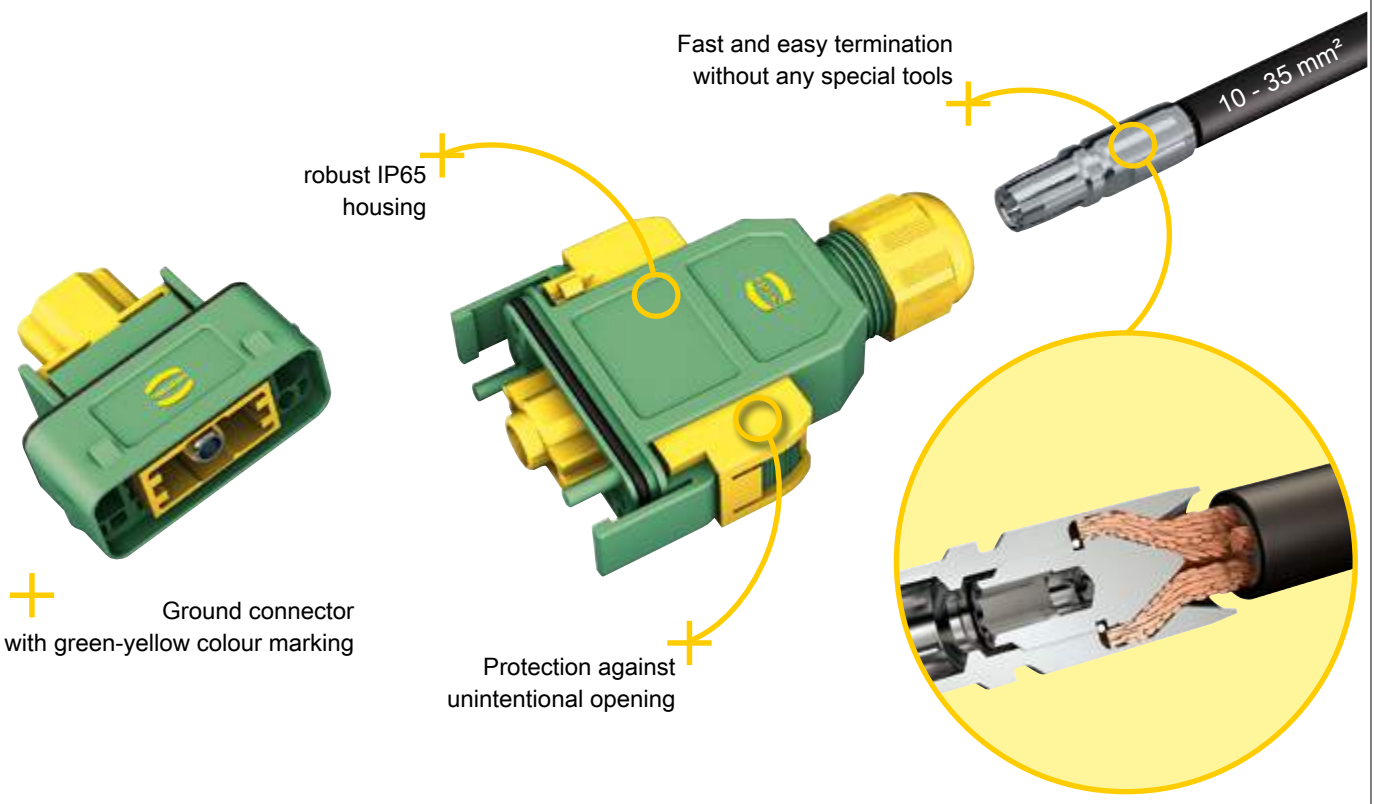

Assembly and construction

Assembly

Please use fine stranded wire (Class 5) which is recommend for the axial screw termination.



Do not twist the stripped wire!

1.

Please strip the wire. All suitable wire gauges have to be stripped with a length of 13 mm (acc. to Class 5).
Insert stripped wire into the terminal and push fully inside. Pay attention that all fine stranded wires are inserted in the contact chamber.

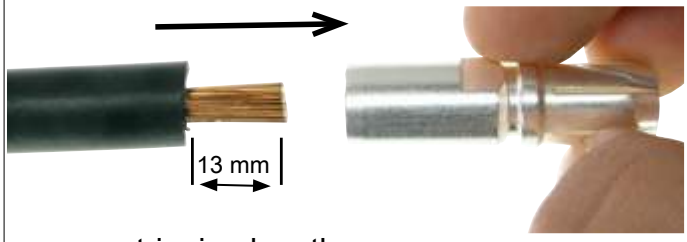

stripping length



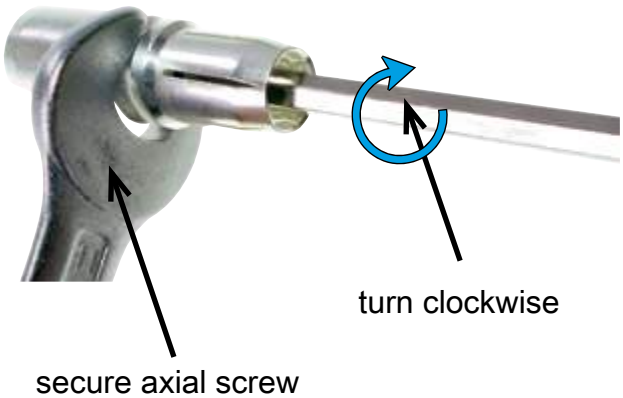

2.

Please insert suitable torque key (SW 4) into the contact from mating side and turn the axial screw clockwise. For that purpose secure the axial screw with a spanner (SW 11).
Tighten the screw to the specified torque value.

Assembly and construction

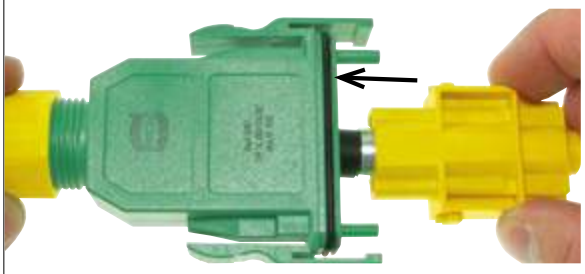

3. Insert the installed cable through the cable gland into the Han® GND housing! Push the axial screw contact into the module until you hear an audible click, which is the indicator that the contact snaps into position.



4. Push the module back into the housing and turn the cable gland clockwise.



5. Mount the module in the housing with the enclosed screws.

Protection against unintentional opening (option)

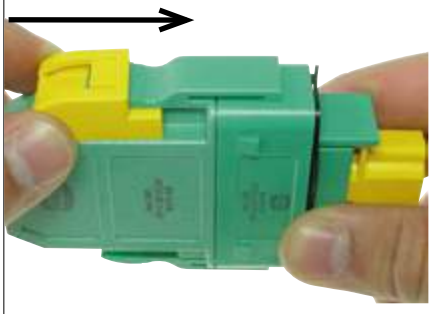

1. Push the unlocking protection over the opening latches to prevent an unintentional opening (the connector can only be unmated with a separate tool).

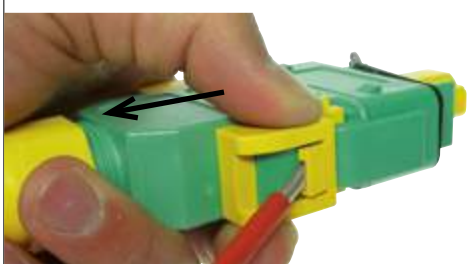

2. The removal of the unlocking protection can be done with a screwdriver for slotted screws (e.g. size 0.8 x 4.0). Insert the screwdriver in the unlocking protection slot and release the plastic latch until you are able to remove the unlocking protection with your fingers.

Features

- First connector for potential equalisation
- Slim, space saving construction type
- Low cost plastic hoods and housings
- Colours: green and yellow
- Crimp or axial screw termination available

Technical characteristics

Number of contacts	1
Insulation resistance	≥10^{10} Ω
Contact resistance	≤0.3 mΩ
Limiting temperature	-40 ... +125 °C
Mating cycles	≥500
Material (insert)	Polycarbonate
Colour (insert)	Yellow
Material (contacts)	Copper alloy
Material flammability class acc. to UL 94	V-0
RoHS	compliant, compliant with exemption
RoHS exemptions	**6c:** Copper alloy containing up to 4 % lead by weight, **6a:** Lead as an alloying element in steel for machining purposes and in galvanised steel containing up to 0,35 % lead by weight

Specifications and approvals

EN 60664-1
IEC 61984
UL 1977 ECBT2.E235076

Details

Hex key (A/F 4) see chapter 90

For more technical details (i.e. number of crimping operations or crimping position) see eCatalogue

Remarks on the axial screw technique

The wire gauges mentioned in the catalogue refer to geometric wire gauges of cables.

Crimping tools see chapter 90

Remarks on the crimp technique

The wire gauges mentioned in the catalogue refer to geometric wire gauges of cables.

Number of contacts

1

Identification	Conductor cross-section (mm²)	Part number Male	Part number Female	Drawing (dimensions in mm)
Han® GND , Crimp termination, Axial screw termination  Please order contacts separately.	10 ... 35	09 14 001 3032	09 14 001 3132	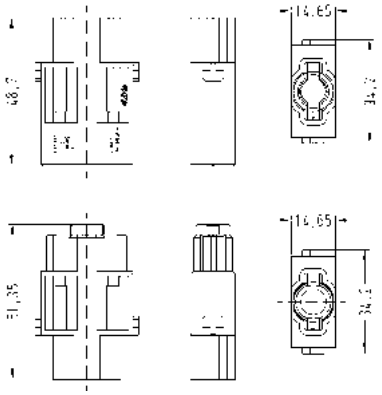
TC 100 , Crimp contact, Contact surface: Silver plated 	10 16 25 35	09 11 000 6114 09 11 000 6116 09 11 000 6125 09 11 000 6135	09 11 000 6214 09 11 000 6216 09 11 000 6225 09 11 000 6235	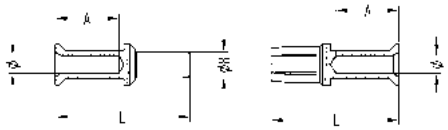 Wire gauge / ∅ / Stripping length A 10 mm² / 4.3 / 19 mm 16 mm² / 5.5 / 19 mm 25 mm² / 7 / 19 mm 35 mm² / 8.2 / 16 mm for stranded wire according to IEC 60 228 Class 5
TC 100 , Axial screw contact, Contact surface: Silver plated 	10 ... 25 16 ... 35	09 11 000 6112 09 11 000 6113	09 11 000 6212 09 11 000 6213	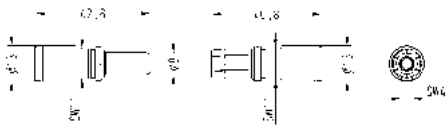 Stripping length 13 mm Tightening torque mm² / 10 / 16 / 25 / 35 Nm / 6 / 6 / 7 / 8

Features

- First connector for potential equalisation
- Slim, space saving construction type
- Low cost plastic hoods and housings
- Colours: green and yellow

Technical characteristics

Limiting temperature	-40 ... +85 °C
Mating cycles	≥500
Degree of protection acc. to IEC 60529	IP65
Material (hood/housing)	Polycarbonate
Colour (hood/housing)	Green, Yellow
Material (seal)	NBR
Material (cable glands)	Polyamide
Material flammability class acc. to UL 94	V-0
RoHS	compliant, compliant with exemption
RoHS exemptions	**6c:** Copper alloy containing up to 4 % lead by weight

Specifications and approvals

EN 60664-1
IEC 61984

Snap-in latches

Identification	Cable entry	Cable diameter (mm)	Part number	Drawing (dimensions in mm)
Han® GND , Hoods, Top entry 	1x Integrated	7,5 ... 14	09 14 001 0430	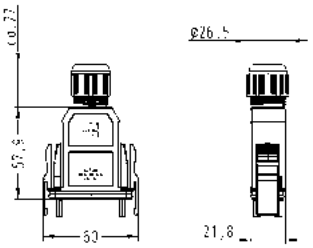
Han® GND , Bulkhead mounted housings 			09 14 001 0330	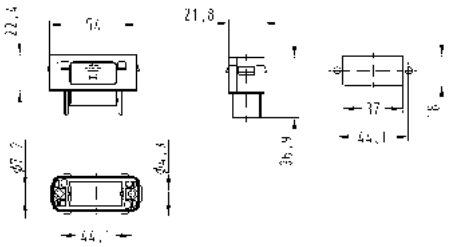
Han® GND , Cable to cable housing, Top entry 	1x Integrated	7,5 ... 14	09 14 001 0730	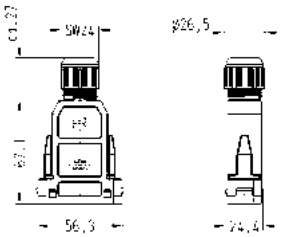
Han® GND, Adapter, Male / male 			09 14 001 9901	
Han® GND , Unlocking protection 			09 14 000 9938	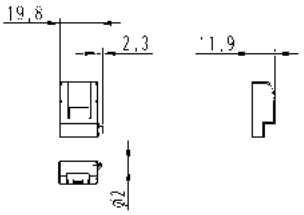

Accessories

Contents	Page
D-Sub adapter	**80.2**
Locking levers	**80.8**
Seals	**80.10**
Han® Hood Link	**80.12**
Panel feed through housings	**80.13**
Accessories for flat cable entry	**80.17**
Cable glands	**80.18**
Shielding frame	**80.23**
Grip frames	**80.26**
Coding of inserts in hoods/housings	**80.28**
Han® docking frame	**80.32**
PE Multiple ground connection	**80.33**
Strain relief clamp	**80.34**
Special insert fixing screws	**80.35**
Screws	**80.36**
Bearing pedestal and covers	**80.39**
Further accessories	**80.40**

D-Sub adapter

Size 10 A



Technical characteristics

Material (accessories)	Thermoplastic, Metal
RoHS	compliant

Details

Not suitable for D-Sub High Density!

Identification	Part number	Drawing (dimensions in mm)
D-Sub 1, Adapter plate, for 1 x D-Sub, Pack contents: 1 adapter, 4 fixing screws for adapter, 2 fixing screws for D-Sub connector	09 20 000 9932	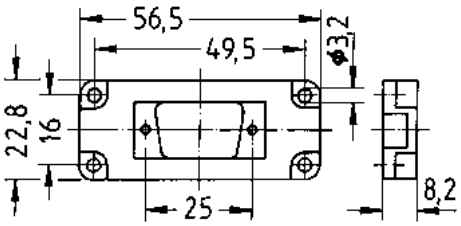 D-Sub 1
D-Sub 2, Adapter plate, for 1 x D-Sub, Pack contents: 1 adapter, 4 fixing screws for adapter, 2 fixing screws for D-Sub connector	09 20 000 9928	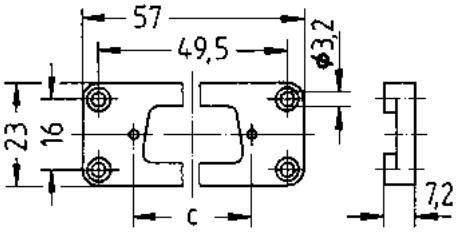 D-Sub 2 c= 33.3 mm D-Sub 3 c= 47 mm
D-Sub 3, Adapter plate, for 1 x D-Sub, Pack contents: 1 adapter, 4 fixing screws for adapter, 2 fixing screws for D-Sub connector	09 20 000 9929	

D-Sub adapter

Size 10 A

Identification	Part number	Drawing (dimensions in mm)
D-Sub 3 in the Han® 10 A, D-Sub 4 in the Han® 16 A, Adapter plate, for 1 x D-Sub, Metal, Pack contents: Two-piece adapter, 2 fixing screws for adapter, 2 fixing screws for D-Sub connector 	09 20 000 9925	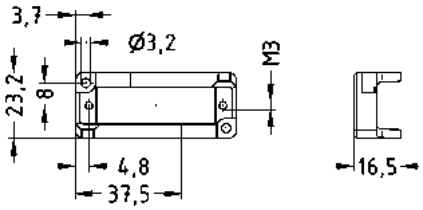

D-Sub adapter

Size 16 A



Technical characteristics

Material (accessories)	Thermoplastic, Metal
RoHS	compliant

Details

Not suitable for D-Sub High Density!

Identification	Part number	Drawing (dimensions in mm)
D-Sub 5, Adapter plate, for 1 x D-Sub, Pack contents: 1 adapter, 4 fixing screws for adapter, 2 fixing screws for D-Sub connector	09 20 000 9931	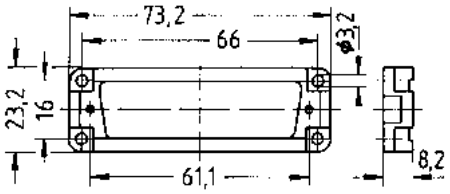
D-Sub 3 in the Han® 10 A, D-Sub 4 in the Han® 16 A, Adapter plate, for 1 x D-Sub, Metal, Pack contents: Two-piece adapter, 2 fixing screws for adapter, 2 fixing screws for D-Sub connector	09 20 000 9925	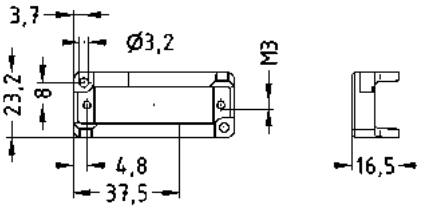





Technical characteristics

Material (accessories)	Thermoplastic
RoHS	compliant

Details

Not suitable for D-Sub High Density!

Identification	Part number	Drawing (dimensions in mm)
D-Sub 1, Adapter plate, for 1 x D-Sub, Pack contents: 1 adapter, 4 fixing screws for adapter, 2 fixing screws for D-Sub connector	09 30 000 9965	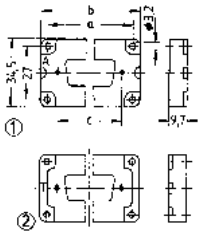 ① Mounting in housing: character A visible ② Mounting in hood: character T visible D-Sub 1: a=44; b=51.5; c=25 D-Sub 2: a=44; b=51.5; c=33.3
D-Sub 2, Adapter plate, for 1 x D-Sub, Pack contents: 1 adapter, 4 fixing screws for adapter, 2 fixing screws for D-Sub connector	09 30 000 9966	
D-Sub 1, Adapter plate, for 2x D-Sub, Pack contents: 1 adapter, 4 fixing screws for adapter, 4 fixing screws for D-Sub connector 	09 30 000 9970	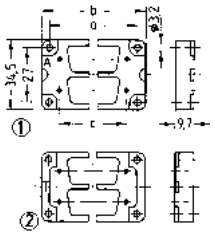 ① Mounting in housing: character A visible ② Mounting in hood: character T visible D-Sub 2x 1: a=44; b=51.5; c=25 D-Sub 2x 2: a=44; b=51.5; c=33.3
D-Sub 2, Adapter plate, for 2x D-Sub, Pack contents: 1 adapter, 4 fixing screws for adapter, 4 fixing screws for D-Sub connector	09 30 000 9971	

D-Sub adapter

Size 10 B



Technical characteristics

Material (accessories)	Thermoplastic
RoHS	compliant

Details

Not suitable for D-Sub High Density!

Identification	Part number	Drawing (dimensions in mm)
D-Sub 3, Adapter plate, for 1 x D-Sub, Pack contents: 1 adapter, 4 fixing screws for adapter, 2 fixing screws for D-Sub connector	09 30 000 9967	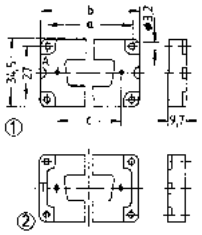 ① Mounting in housing: character A visible ② Mounting in hood: character T visible D-Sub 3: a=57; b=64.5; c=47
D-Sub 3, Adapter plate, for 2x D-Sub, Pack contents: 1 adapter, 4 fixing screws for adapter, 4 fixing screws for D-Sub connector 	09 30 000 9972	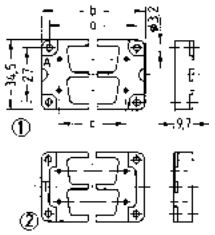 ① Mounting in housing: character A visible ② Mounting in hood: character T visible D-Sub 2x 3: a=57; b=64.5; c=47



Technical characteristics

Material (accessories)	Thermoplastic
RoHS	compliant

Details

Not suitable for D-Sub High Density!

Identification	Part number	Drawing (dimensions in mm)
D-Sub 4, Adapter plate, for 1 x D-Sub, Pack contents: 1 adapter, 4 fixing screws for adapter, 2 fixing screws for D-Sub connector	09 30 000 9968	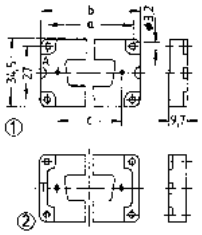 ① Mounting in housing: character A visible ② Mounting in hood: character T visible D-Sub 4: a=77.5; b=85; c=63.5 D-Sub 5: a=77.5; b=85; c=61.1
D-Sub 5, Adapter plate, for 1 x D-Sub, Pack contents: 1 adapter, 4 fixing screws for adapter, 2 fixing screws for D-Sub connector	09 30 000 9969	
D-Sub 4, Adapter plate, for 2x D-Sub, Pack contents: 1 adapter, 4 fixing screws for adapter, 4 fixing screws for D-Sub connector 	09 30 000 9973	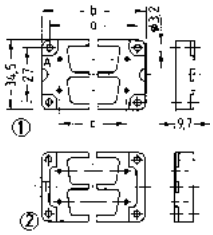 ① Mounting in housing: character A visible ② Mounting in hood: character T visible D-Sub 2x 4: a=77.5; b=85; c=63.5 D-Sub 2x 5: a=77.5; b=85; c=61.1
D-Sub 5, Adapter plate, for 2x D-Sub, Pack contents: 1 adapter, 4 fixing screws for adapter, 4 fixing screws for D-Sub connector	09 30 000 9974	

Locking levers

Double locking lever

Technical characteristics

Material (accessories)	Polycarbonate, Stainless steel
Colour (accessories)	RAL 7037 (dust grey)

Technical characteristics

Material flammability class acc. to UL 94 (locking levers)	V-0
RoHS	compliant

Identification	Size	Part number	Drawing (dimensions in mm)
Han A® , Han-Easy Lock®, Locking levers, RAL 7037 (dust grey) 	32 A	09 00 000 5223	
Han® B , Han-Easy Lock®, Locking levers, RAL 7037 (dust grey) 	10/16/24 B 32 B	09 00 000 5221 09 00 000 5231	

Locking levers

Single locking lever

Technical characteristics

Material (accessories)	Thermoplastic, Polycarbonate, Stainless steel
Colour (accessories)	RAL 7032 (pebble grey), Black, RAL 7037 (dust grey)

Technical characteristics

Material flammability class acc. to UL 94 (locking levers)	V-0
RoHS	compliant

Identification	Size	Part number	Drawing (dimensions in mm)
Locking levers, RAL 7032 (pebble grey) 	3 A	09 00 000 5241	
Locking levers, Black 	3 A	09 00 000 5242	
Locking levers, Han® Q 8/0, Black 	Modular Compact	09 00 000 5244	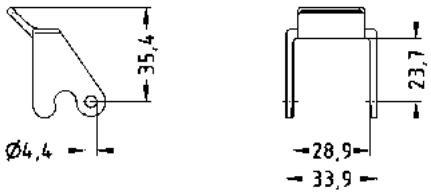
Han A® , Han-Easy Lock®, Locking levers, RAL 7037 (dust grey) 	10 A 16 A	09 00 000 5224 09 00 000 5225	
Han® B , Han-Easy Lock®, Locking levers, RAL 7037 (dust grey) 	06 B 10 B 16 B 24 B	09 00 000 5222 09 00 000 5228 09 00 000 5229 09 00 000 5230	

Seals



Technical characteristics

Material (seal)	NBR, FPM

Technical characteristics

Colour (seal)	Black
RoHS	compliant

Identification	Size	Part number	Drawing (dimensions in mm)
Han A® , Flange gasket 	03 A 10 A 16 A 32 A	09 20 000 9991 09 20 000 9992 09 20 000 9993 09 20 000 9994	
Han® B , Flange gasket 	06 B 10 B 16 B 24 B	09 30 000 9991 09 30 000 9992 09 30 000 9993 09 30 000 9994	
Han® B , Flange gasket, Self-retaining 	06 B 10 B 16 B 24 B	09 30 000 9801 09 30 000 9802 09 30 000 9803 09 30 000 9804	
Flange gasket 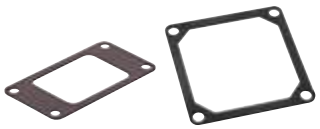	03 HPR 48 HPR Han-Drive® Modular Compact	09 40 000 9980 09 30 000 9996 09 30 000 9903 09 14 000 9940	
Flange gasket, Han® HPR 	06 HPR 10 HPR 16 HPR 24 HPR	09 40 000 9801 09 40 000 9802 09 40 000 9803 09 40 000 9804	
Han A® , Flange gasket, FPM	03 A	09 37 000 9912	
Han® B , Flange gasket, FPM	06 B 10 B 16 B 24 B	09 37 000 9946 09 37 000 9947 09 37 000 9948 09 37 000 9949	

Seals

Technical characteristics

Material (seal)	NBR, FPM

Technical characteristics

Colour (seal)	Black, Grey
RoHS	compliant

Identification	Size	Part number	Drawing (dimensions in mm)
Han A® , Profile gasket 	03 A 10 A 16 A	09 70 000 9991 09 20 000 9996 09 20 000 9997	
Han® B , Profile gasket 	06 B 10 B 16 B 24 B 32 B 48 B	09 30 000 9941 09 30 000 9942 09 30 000 9943 09 30 000 9944 09 30 000 9963 09 30 000 9995	
O-ring rubber seal, Han® HPR 	03 HPR 06 HPR 10 HPR 16 HPR 24 HPR	09 40 000 9910 09 40 000 9911 09 40 000 9912 09 40 000 9913 09 40 000 9914	
L-seal 	06 B 10 B 16 B 24 B	09 30 000 9936 09 30 000 9935 09 30 000 9934 09 30 000 9933	
Profile gasket, FPM 	03 A 06 B 10 B 16 B 24 B	09 21 000 9906 09 30 000 9951 09 30 000 9952 09 30 000 9953 09 30 000 9954	

Han® Hood Link

Size 16 B

Features

- Cable to cable connection simple to realise and easy to mount
- Resistant elastomer
- Locking as well as seal combined in one system
- for two lever locking system

Technical characteristics

Limiting temperature	-40 ... +85 °C
Degree of protection acc. to IEC 60529	IP65, in locked position
Colour (hood/housing)	Black
RoHS	compliant

Identification	Part number	Drawing (dimensions in mm)
Locking element, for hoods 	09 30 016 9901	

Panel feed through housings

Standard hoods/housings for industrial connectors
Double locking lever



Features

- Allows the entry of pre-assembled cables into a switch cabinet
- Robust design
- High pole cable entry seals for up to 10 different cables
- For sealing and feed through of pre-assembled cables

Technical characteristics

Limiting temperature	-40 ... +125 °C
Degree of protection acc. to IEC 60529	IP65
Material (hood/housing)	Aluminium die-cast
Material (seal)	NBR

Identification	Cable entry	Size	Part number	Drawing (dimensions in mm)
Han® B , Panel feed through housing, Top entry, Pack contents: 2 split hood halves, 2x M4 screw  Please order cable entry seals separately.	2x 3x	10 B 16 B	09 30 010 0498 09 30 016 0498	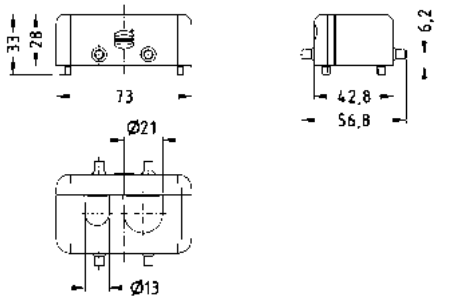 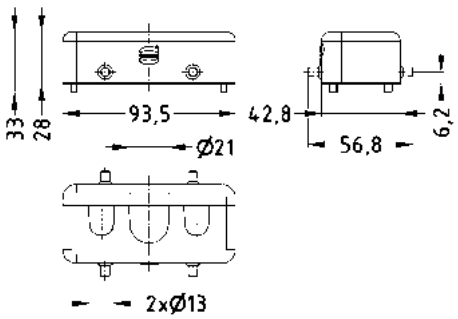
Han® B , Panel feed through housing, Top entry, Pack contents: 2 split hood halves, 3x M4 screw  Please order cable entry seals separately.	4x	24 B	09 30 024 0498	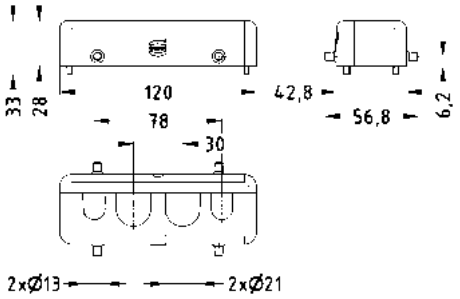

Technical characteristics

Material (accessories) NBR

Technical characteristics

Colour (accessories) Black

Identification	Clamping range (mm)	Part number	Drawing (dimensions in mm)
Cable entry seal, 4 cable entries, Wide version 	... 6	09 00 000 6004	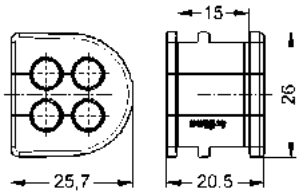
Cable entry seal, 1 cable entry, Narrow version 	4,5 ... 6 6 ... 7,5 7,5 ... 9	09 00 000 6005 09 00 000 6006 09 00 000 6007	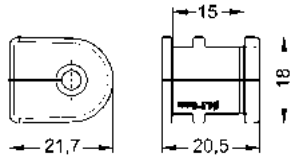
Cable entry seal, 1 cable entry, Wide version 	9 ... 10,5 10,5 ... 12 12 ... 13,5 13,5 ... 15 15 ... 16	09 00 000 6008 09 00 000 6009 09 00 000 6010 09 00 000 6011 09 00 000 6012	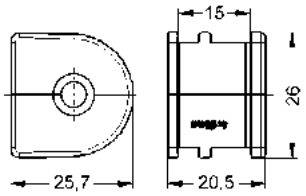

Panel feed through housings

Standard hoods/housings for industrial connectors
Double locking lever



Features

- Allows the entry of pre-assembled cables into a switch cabinet
- Use of identification strips is possible
- No special tools required
- Standard screw driver (5 x 1 mm) necessary to open split hood
- IP54 due to continuos contoured seal

Technical characteristics

Limiting temperature	-40 ... +125 °C
Degree of protection acc. to IEC 60529	IP54, when mounted vertically, IP65
Type rating acc. to UL 50 / UL 50E	4, 4X, 12
Material (hood/housing)	Polycarbonate
Colour (hood/housing)	RAL 7037 (dust grey)
RoHS	compliant

Specifications and approvals

UL 1977 ECBT2.E235076
CSA-C22.2 No. 182.3 ECBT8.E235076

Identification	Cable entry	Cable diameter (mm)	Size	Part number	Drawing (dimensions in mm)
Han® B , Panel feed through housing, Top entry, Pack contents: 2 split hood halves  Please order cable entry seals separately.	3x Integrated 4x Integrated	17,6 17,8	16 B 24 B	09 30 016 0408 09 30 024 0408	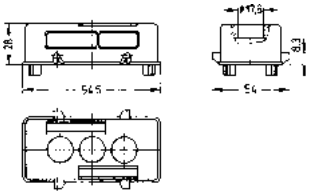 09 30 016 0301 Han® 16 B See chapter 31 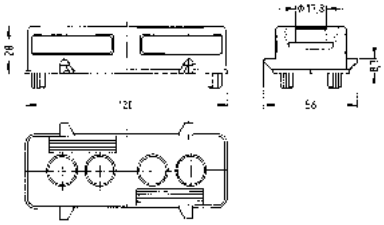 09 30 024 0301 Han® 24 B See chapter 31
Identification strip, Pack contents: Single 				09 33 000 9981	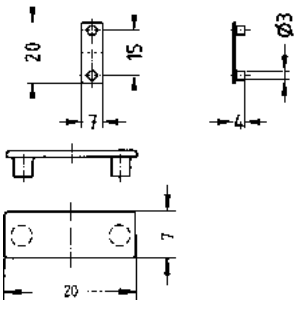

Technical characteristics

Material (accessories)	Thermoplastic

Technical characteristics

Colour (accessories)	Black
RoHS	compliant

Identification	Clamping range (mm)	Part number	Drawing (dimensions in mm)
Cable entry seal 	3 ... 4 4 ... 5 5 ... 6 6 ... 7 7 ... 8 8 ... 9 9 ... 10	09 00 000 5351 09 00 000 5352 09 00 000 5353 09 00 000 5354 09 00 000 5355 09 00 000 5356 09 00 000 5357	
Cable entry seal, Additional strain relief can be provided by cable ties (max. width 8 mm) 	10 ... 11 11 ... 12 12 ... 13 13 ... 14 14 ... 15 15 ... 16	09 00 000 5358 09 00 000 5359 09 00 000 5360 09 00 000 5361 09 00 000 5362 09 00 000 5363	
Cable entry seal, for ASI cable 		09 00 000 5364	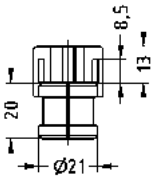
Dummy plugs 		09 00 000 5350	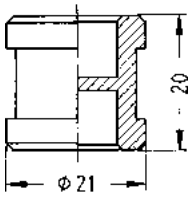

Accessories for flat cable entry

Technical characteristics

Material (seal)	NBR

Technical characteristics

Colour (seal)	Black
RoHS	compliant

Identification	Part number	Drawing (dimensions in mm)
Set of seals for ribbon cable entry, With strain relief clamp, for 1 flat cable 	09 00 000 5315	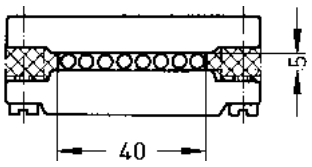
Set of seals for ribbon cable entry, With strain relief clamp, for 2 flat cables 	09 00 000 5316	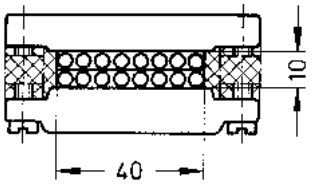
Set of seals for ribbon cable entry, With strain relief clamp, for 3 flat cables 	09 00 000 5317	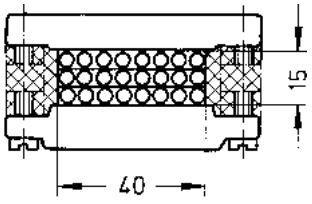
Holder for ribbon cable entry, for separate mounting 	09 00 000 5325	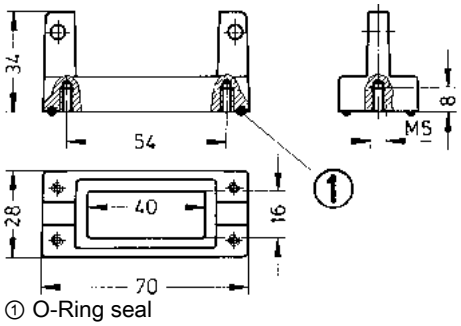 ① O-Ring seal

Technical characteristics

Limiting temperature	-40 ... +100 °C
Degree of protection acc. to IEC 60529	IP68, IP69 / IPX9K acc. to ISO 20653
Material (seal)	NBR
Material (cable glands)	Polyamide
Colour (accessories)	RAL 5012 (light blue), RAL 9005 (jet black), RAL 7032 (pebble grey), RAL 7035 (light grey)
Material flammability class acc. to UL 94	V-0

Technical characteristics

RoHS	compliant, compliant with exemption
RoHS exemptions	**6c:** Copper alloy containing up to 4 % lead by weight

Specifications and approvals

DNV GL
UL 514B QCRV.E479780
CSA-C22.2 No. 18.3 QCRV7.E479780

Identification	Size	Clamping range (mm)	Part number	Drawing (dimensions in mm)
Han® CGM-Ex i , Cable gland, Intrinsically safe electric circuits , Blue	M20 M20 M25 M32 M40	5 ... 9 6 ... 12 9 ... 16 13 ... 20 22 ... 32	19 00 000 7101 19 00 000 7102 19 00 000 7104 19 00 000 7106 19 00 000 7109	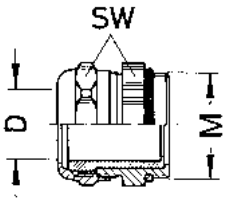
Han® CGM-P , Cable gland, Grey 	M20 M20 M20 M25 M25 M32 M32 M40 M40	5 ... 9 6 ... 12 10 ... 14 9 ... 16 13 ... 18 13 ... 18 18 ... 25 20 ... 26 22 ... 32	19 00 000 5180 19 00 000 5182 19 00 000 5184 19 00 000 5190 19 00 000 5192 19 00 000 5194 19 00 000 5196 19 00 000 5197 19 00 000 5198	
Han® CGM-P , Cable gland, Black 	M20 M20 M20 M25 M25 M32 M32 M40 M40	5 ... 9 6 ... 12 10 ... 14 9 ... 16 13 ... 18 13 ... 20 18 ... 25 20 ... 26 22 ... 32	19 00 000 5181 19 00 000 5183 19 00 000 5185 19 00 000 5191 19 00 000 5193 19 00 000 5186 19 00 000 5187 19 00 000 5188 19 00 000 5189	

Clamping range Ø	SW	E	Nm
5 ... 9 mm	24	26.4	4.5
6 ... 12 mm	24	26.4	4.5
10 ... 14 mm	27	29.8	4.5
9 ... 16 mm	33	33.5	5
13 ... 18 mm	33	36.5	5
13 ... 20 mm	42	46.8	6.5
18 ... 25 mm	42	46.8	6.5
20 ... 26 mm	53	58.8	10
22 ... 32 mm	53	58.8	10

Technical characteristics

Limiting temperature	-40 ... +100 °C
Degree of protection acc. to IEC 60529	IP68, IP69 / IPX9K acc. to ISO 20653
Material (seal)	NBR
Material (cable glands)	Brass, nickel plated
Material (clamping ring)	Polyamide
RoHS	compliant with exemption
RoHS exemptions	**6c:** Copper alloy containing up to 4 % lead by weight

Specifications and approvals

UL 514B QCRV.E479780
CSA-C22.2 No. 18.3 QCRV7.E479780
DNV GL

Identification	Size	Clamping range (mm)	Part number	Drawing (dimensions in mm)
Han® CGM-M , Cable gland 	M20	5 ... 9	19 00 000 5080	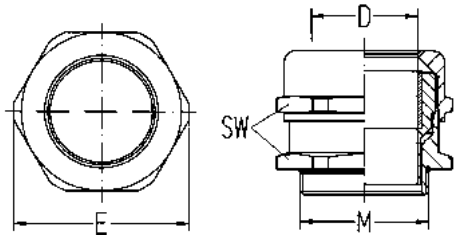
	M20	5 ... 12	19 00 000 5081	
	M20	6 ... 12	19 00 000 5082	
	M20	10 ... 14	19 00 000 5084	
	M25	9 ... 16	19 00 000 5090	
	M25	9 ... 18	19 00 000 5091	
	M25	13 ... 18	19 00 000 5092	
	M32	13 ... 20	19 00 000 5094	
	M32	13 ... 25	19 00 000 5095	
	M32	18 ... 25	19 00 000 5096	
	M40	20 ... 26	19 00 000 5097	
	M40	20 ... 32	19 00 000 5099	
	M40	22 ... 32	19 00 000 5098	
	M50	32 ... 38	19 00 000 5086	

Outer cable Ø	SW	E	Nm
5 ... 9 mm	22	24.4	10
5 ... 12 mm	22	24.4	10
6 ... 12 mm	22	24.4	10
10 ... 14 mm	24	26.4	10
9 ... 16 mm	30	33.5	12
9 ... 18 mm	30	33.5	12
13 ... 18 mm	30	33.5	12
13 ... 20 mm	40	44	15
13 ... 25 mm	40	44	15
18 ... 25 mm	40	44	15
20 ... 26 mm	50	55	15
22 ... 32 mm	50	55	15
20 ... 32 mm	50	55	15
32 ... 38 mm	57	60	24



Technical characteristics

Degree of protection acc. to IEC 60529	IP68
Material (cable glands)	Metal

Technical characteristics

RoHS	compliant with exemption
RoHS exemptions	**6c:** Copper alloy containing up to 4 % lead by weight

Identification	Size	Clamping range (mm)	Part number
Cable gland, EMC version	M20	4 ... 6,5	19 62 000 5081
	M20	6,5 ... 9,5	19 62 000 5080
	M20	7 ... 10,5	19 62 000 5082
	M20	9 ... 13	19 62 000 5084
	M25	6,5 ... 9,5	19 62 000 5090
	M25	9 ... 13	19 62 000 5092
	M32	11,5 ... 15,5	19 62 000 5094
	M32	14 ... 18	19 62 000 5096
	M40	17 ... 20,5	19 62 000 5097
	M40	20 ... 25	19 62 000 5098

Drawing (dimensions in mm)

cable-Ø D	SW	E	shield-Ø B
6.5 ... 9.5	22	24.4	3,5 ... 8,5
4 ... 6.5	22	24.4	2,5 ... 6,5
7 ... 10.5	22	24.4	6,5 ... 10,5
9 ... 13	22	24.4	6,5 ... 10,5
6.5 ... 9.5	22	31.2	3 ... 8
9 ... 13	28	31.2	4,8 ... 8
11.5 ... 15.5	35	38.5	8 ... 13,5
14 ... 18	35	38.5	9 ... 14,5
17 ... 20.5	43	47.3	15 ... 20
20 ... 25	43	47.3	15 ... 20

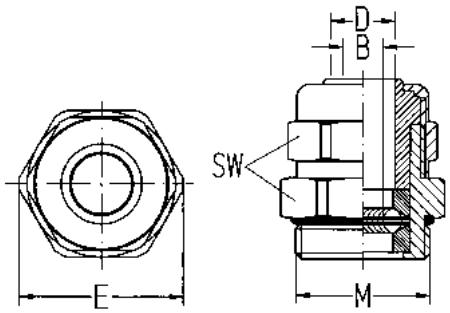

Technical characteristics

Material (accessories)	Thermoplastic, Metal
Colour (accessories)	Black

Technical characteristics

RoHS	compliant with exemption, compliant
RoHS exemptions	**6c:** Copper alloy containing up to 4 % lead by weight

Identification	Size	Reduced size	Part number	Drawing (dimensions in mm)
Han A®, Adapter, for motor connection 	M20		19 20 000 9962	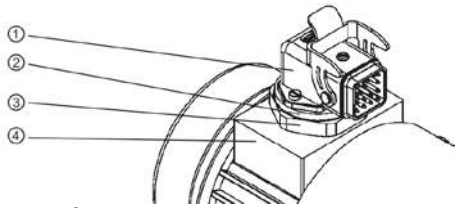 ① Han® 3 A ② Seal ③ Adapter Han® 3 A ④ Housing for motor applications 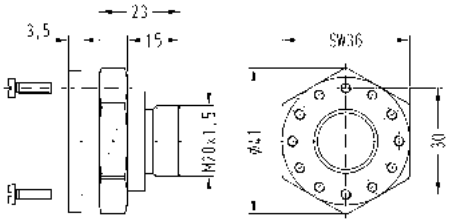
Dummy plugs 	M32 M40		19 00 000 5172 19 00 000 5173	 M32: Ø 35 mm M40: Ø 46.2 mm
Reduced size 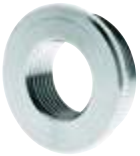	M20 M32 M32	M16 M20 M25	19 00 000 5060 19 00 000 5067 19 00 000 5068	

Identification	Size	Reduced size	Part number	Drawing (dimensions in mm)
Reduced size, With O-ring 	M32 M32	M20 M25	19 00 000 5066 19 00 000 5069	
Dummy plugs, With O-ring 	M20 M25 M32 M40		19 00 000 5070 19 00 000 5071 19 00 000 5072 19 00 000 5073	 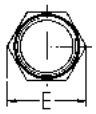 M20: SW 22; E 25.4 M25: SW 28; E 32.3 M32: SW 35; E 40.4 M40: SW 44; E 50.8

Shielding frame

Technical characteristics

Material (accessories)	Steel, zinc plated

Technical characteristics

RoHS	compliant

Identification	Size	Part number	Drawing (dimensions in mm)
Han E® Han® EE Han DD® Han-Snap® , Shielding frame, for bulkhead mounted housings and hoods, High construction, Pack contents: Ground terminal frame with M4 screws for fixing at insert 	06 B 10 B 16 B	09 00 000 5206 09 00 000 5207 09 00 000 5208	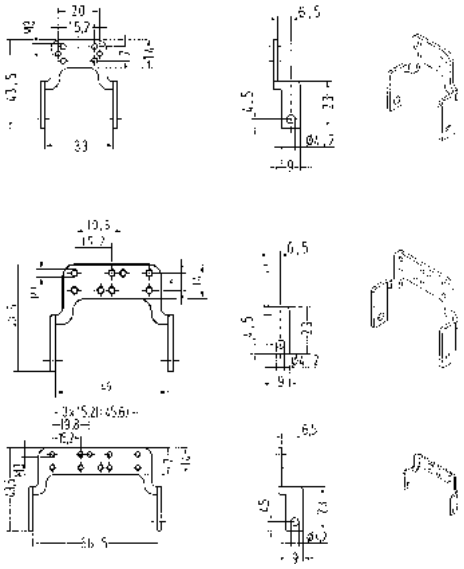
Han E® Han® EE Han DD® Han-Snap® , Shielding frame, for bulkhead mounted housings and hoods, High construction, 24 B, Pack contents: Ground terminal frame with M4 screws for fixing at insert 	24 B 24 B	09 00 000 5210 09 00 000 5280	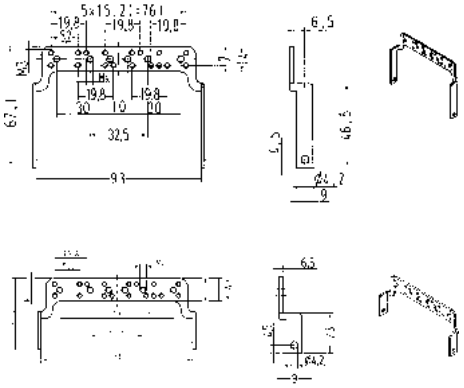

Shielding frame

Identification	Size	Part number	Drawing (dimensions in mm)
Han-Modular® , Shielding frame, for bulkhead mounted housings, High construction 	06 B 10 B 16 B 24 B	09 00 000 5256 09 00 000 5257 09 00 000 5258 09 00 000 5211	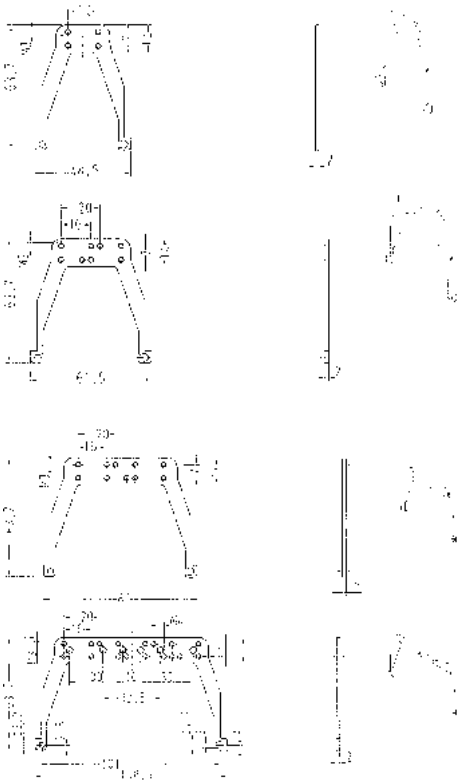
Han-Modular® , Shielding frame, for bulkhead mounted housings and hoods 	24 B	09 00 000 5298	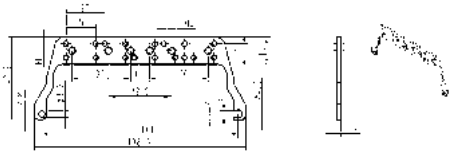
Han-Quintax® , Shielding frame, for bulkhead mounted housings and hoods 	24 B	09 00 000 5235	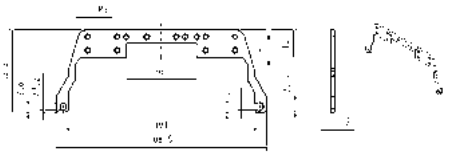
Han-Modular® , PE bracket, for bulkhead mounted housings 	24 B	09 00 000 5209	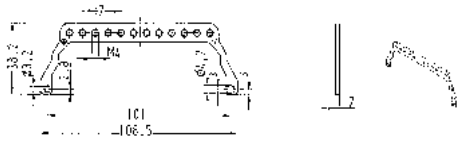

Technical characteristics

Material (accessories)	Steel, zinc plated

Technical characteristics

RoHS	compliant

Identification	Cable diameter (mm)	Part number	Drawing (dimensions in mm)
Clamp, for shield frames 	5 10	09 00 000 5341 09 00 000 5342	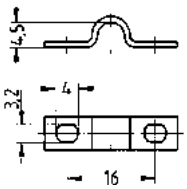 Cable diameter 5 mm 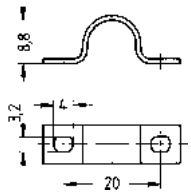 Cable diameter 10 mm

Grip frames

Technical characteristics

Material (accessories)	Metal

Technical characteristics

Surface (accessories)	Zinc plated
RoHS	compliant

Identification	Size	Part number	Drawing (dimensions in mm)
Grip frame 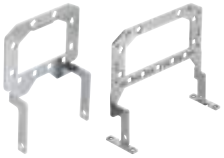	16 B 24 B	09 00 016 5603 09 00 024 5601	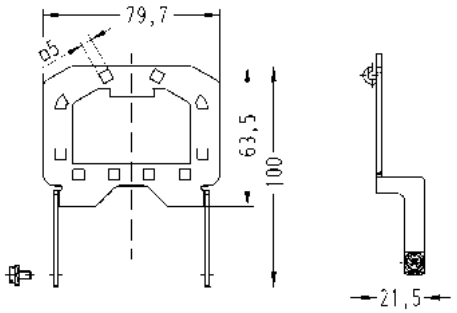 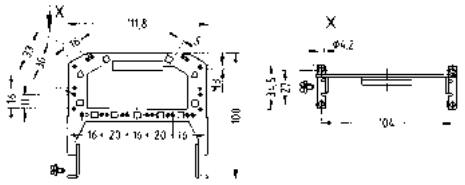
Grip frame, With screw adapter and screw to use in connection with 09 00 000 5602 	24 B	09 00 024 5611	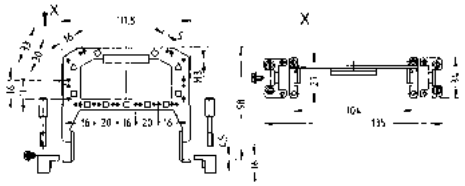

Grip frames

Features

- Grip frame suitable for Han® 64 D / Han® 108 DD / Han® 24 E / Han® 24 ES / Han® 24 ESS / Han® 46 EE
- Multiple shield connections via grip frame
- Cable can be fixed with clamps or cable tie

Technical characteristics

Material (accessories)	Zinc die-cast
Surface (accessories)	Copper-plated, Nickel plated
RoHS	compliant

Identification	Part number	Drawing (dimensions in mm)
Screw adapter, Bulkhead mounting, To use in connection 09 00 024 5611 	09 00 000 5602	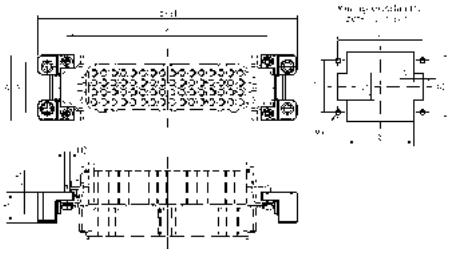 a: 6 B 44, 10 B 57, 16 B 77,5, 24 B 104 b: 6 B 35, 10 B 48, 16 B 68,5, 24 B 95
Screw adapter, Bulkhead mounting 	09 00 000 5603	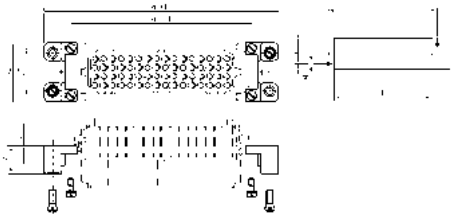 a: 6 B 65, 10 B 78, 16 B 98,5, 24 B 125 b: 6 B 52, 10 B 65, 16 B 85,5, 24 B 112

Coding of inserts in hoods/housings

Technical characteristics

RoHS	compliant with exemption

Technical characteristics

RoHS exemptions	**6a:** Lead as an alloying element in steel for machining purposes and in galvanised steel containing up to 0,35 % lead by weight

Identification	Part number Male	Part number Female	Drawing (dimensions in mm)
Coding, With guide pins/bushes, for application “insert with screw adapter” with/ without grip frame  Please order 4 pieces for one connector.	09 33 000 9808	09 33 000 9809	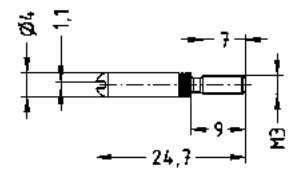 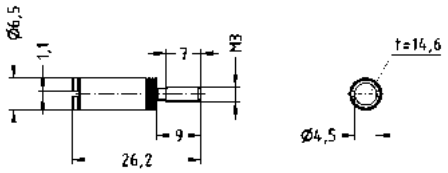
Coding, With guide pins/bushes, for application “insert in hood/housing”  Please order 4 pieces for one connector.	09 33 000 9908	09 33 000 9909	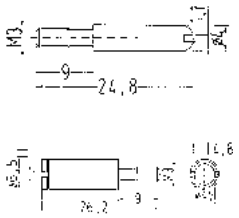
Han-Modular® , Coding, With guide pins/bushes, for application “insert with screw adapter” with/ without grip frame  Please order 4 pieces for one connector.	09 14 000 9981	09 14 000 9982	

Coding of inserts in hoods/housings

Identification	Part number Male	Part number Female	Drawing (dimensions in mm)
Han-Modular® , Coding, With guide pins/bushes, for application “insert in hood/housing” 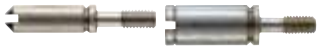 Please order 4 pieces for one connector.	09 14 000 9908	09 14 000 9909	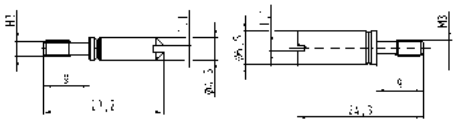 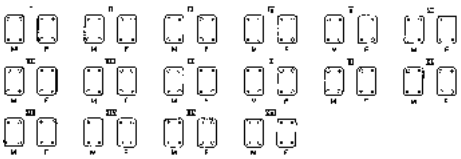 for hoods/housings with one insert/one frame 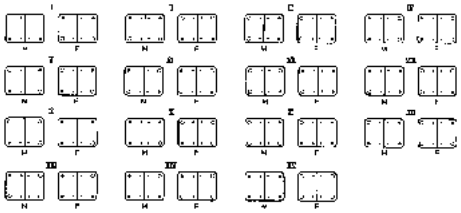 for hoods/housings with tho inserts/two frames ◆ Guide pin ○ Bush + Fixing screw M - male insert F - female insert

Coding of inserts in hoods/housings

Technical characteristics

RoHS	compliant with exemption

Technical characteristics

RoHS exemptions	**6a:** Lead as an alloying element in steel for machining purposes and in galvanised steel containing up to 0,35 % lead by weight

Identification	Part number	Drawing (dimensions in mm)
Coding, With code pins, Han® B  Please order 4 pieces for one connector.	09 30 000 9901	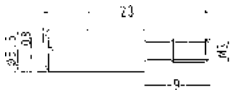
Han-Modular® , Coding, With code pins  Please order 4 pieces for one connector.	09 14 000 9901	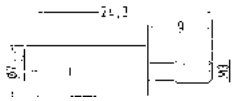 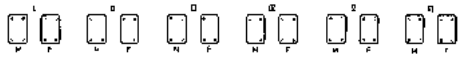 for hoods/housings with one insert/one frame 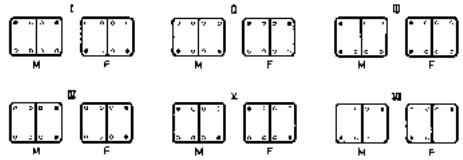 for hoods/housings with tho inserts/two frames ◆ Code pin + Fixing screw M - male insert F - female insert

Coding of inserts in hoods/housings

Technical characteristics

Material (accessories)	Thermoplastic
RoHS	compliant

Details

Coding pin

Use of the coding pin prevents incorrect mating to other connectors of the same type. The male pin should be omitted from the opposing cavity in the male insert.

Identification	Part number	Drawing (dimensions in mm)
Han D® Han DD® , Coding pin  Only for crimp termination With loss of one contact	09 33 000 9915	
Han E® Han® EE Han® EEE , Coding pin  for crimp inserts only	09 33 000 9954	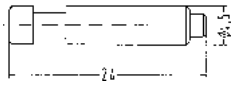

Han® docking frame



Features

- Suitable for all inserts of the series Han E®, Han E® HMC, Han EE®, Han EE® HMC, Han EEE®, Han EEE® HMC, Han® ES, Han D® (size B), Han D® HMC, Han DD®, Han DD® HMC, Han-Com®, Han® HsB, Han-Modular®
- Due to the floating system of the docking frame the PE connection of the mounting base has to be installed separately.
- Inserts are protected against mechanical damage

Technical characteristics

Mating cycles	≥500
Mating cycles with other HMC components	≥10000
Material (accessories)	Stainless steel
RoHS	compliant with exemption
RoHS exemptions	**6a:** Lead as an alloying element in steel for machining purposes and in galvanised steel containing up to 0,35 % lead by weight

Identification	Size	Part number	Drawing (dimensions in mm)
Docking frame, Pack contents: 1 frame, 4 cheese head shoulder screws (Steel, zinc plated) to fix the docking frame  Pull-in-range x-axis: ± 1.5 mm Pull-in-range y-axis: ± 1.5 mm	06 B 10 B 16 B 24 B	09 30 006 1704 09 30 010 1704 09 30 016 1704 09 30 024 1704	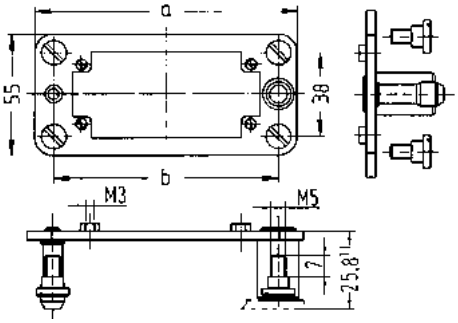 Distance for electrical and FO contacts max. 27 mm; for Han-Modular® series max. 26.5 mm 6 B: a=86; b=69 10 B: a=99; b=82 16 B: a= 119.5 ; b= 102.5 24 B: a=146; b=129 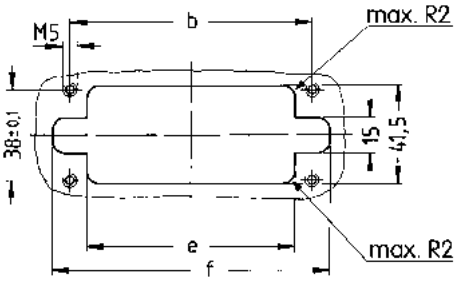 6 B: b= 69; e= 54.5; f= 84 10 B: b= 82; e= 67.5; f= 97 16 B: b= 102.5; e= 88; f= 117.5 24 B: b= 129; e= 114.5; f= 144

PE Multiple ground connection

Number of contacts

3+ ⏚



Features

- 3 PE-terminations
- Screws with ± head
- Self lifting washer
- Suitable for use with all inserts of the Han® 6 B to 24 B size (except Han® ESS-inserts)
- Suitable in hoods high construction

Technical characteristics

Number of contacts	3
Contact resistance	≤3 mΩ
Material (contacts)	Copper alloy
RoHS	compliant

Details

The PE-multiple ground connection may be used to terminate three PE-wires on one connector. Each PE-wire can be terminated and removed separately.

(acc. VDE 0113 DIN EN 60204 Pt. 14.1.1)

Identification	Conductor cross-section (mm²)	Part number	Drawing (dimensions in mm)
PE Multiple ground connection, Pack contents: Distributor, Fixing screw M4 with washer Contact surface: Nickel plated 	0,5 ... 2,5	09 33 000 9992	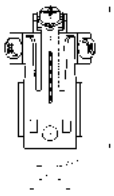

Strain relief clamp

Technical characteristics

RoHS	compliant

Details

When using inserts without hoods or housings and requiring a strain relief this system is suitable for all rectangular connectors of series Han DD®, Han® 40-64 D, Han E®, Han® ES, Han Hv E®, Han® Hv ES, Han® EE, Han® K 8/24.

Fitted at the opposite end to the PE-termination.

Identification	Clamping range (mm)	Part number	Drawing (dimensions in mm)
Strain relief clamp, Angled, Pack contents: Strain relief clamp with 2 screws M3, Fixing screw M4 with washer 	9 ... 19	09 00 000 5339	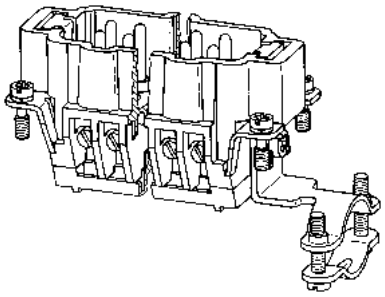
Strain relief clamp, Straight, Pack contents: Strain relief clamp with 2 screws M3, Fixing screw M4 with washer 	9 ... 19	09 00 000 5340	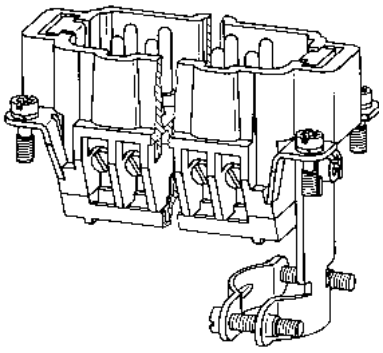

Special insert fixing screws

Features

- Useable for inserts without hoods or housings and requiring a strain relief
- Suitable for all rectangular connectors of the Han® series Han® 6 B, 10 B, 16 B, 24 B

Technical characteristics

RoHS	compliant with exemption
RoHS exemptions	**6a:** Lead as an alloying element in steel for machining purposes and in galvanised steel containing up to 0,35 % lead by weight

Details

When using inserts without hoods or housings and requiring a locking facility this system is suitable for all rectangular connectors of the Han® series size 6 ... 24 B. For each connector we recommend two screw pins and two bushes as shown which are fitted diagonally to the inserts instead of the ordinary fixing screws. Holes for fixing to be drilled as shown.

Identification	Part number	Drawing (dimensions in mm)
Bush  Order 2 pieces for one connector.	09 33 000 9912	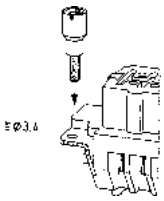
Knurled screw  Order 2 pieces for one connector.	09 33 000 9910	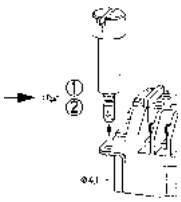 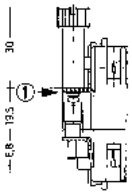 Mounting example

Screws

Technical characteristics

RoHS	compliant, compliant with exemption

Technical characteristics

RoHS exemptions	**6c:** Copper alloy containing up to 4 % lead by weight

Identification	Size	Part number	Drawing (dimensions in mm)
Han-Modular® Compact , Fixing screws 	ST 2.9x9.5 F-H	09 12 000 9921	
Fixing screws 	M3	09 16 000 9903	
Fixing screws, With seal, Han® 3 A 	M3	09 20 000 9918	
Fixing screws, Han® 3 A 	M3	09 20 000 9995	
Toggle locking screw, Han® 6/10/16/24 HPR 		09 40 000 9931	
Toggle locking screw, 3 HPR 		09 40 000 9933	

Screws

Identification	Size	Part number	Drawing (dimensions in mm)
Contact screw, Han A®  for PE in Han® Q 5/0, Q 7/0		09 30 000 9997	
PE screw, Han-Modular® hinged frames 	M3 M4	09 14 000 9953 09 14 000 9954	
PE screw, Han A®, Han® 15 D, Han® 25 D 	M3.5	09 20 000 9919	
PE screw, 6 B ... 24 B 	M4	09 33 000 9925	
PE screw, Han-Com®, Han® HsB 	M5	09 33 000 9926	
Countersunk flat 		09 70 000 9902	
Countersunk flat, With seal 		09 70 000 9905	

Screws

Identification	Size	Part number	Drawing (dimensions in mm)
Locking screw, 3 HPR 	M4	09 40 000 9929	
Locking screw, Han® 6/10/16/24 HPR 	M6	09 40 000 9932	
Locking screw, 48 HPR 	M6	09 40 000 9937	

Bearing pedestal and covers

Technical characteristics

Limiting temperature	-40 ... +125 °C
Degree of protection acc. to IEC 60529	IP65
Material (accessories)	Steel, zinc plated, Thermoplastic, Metal

Technical characteristics

RoHS	compliant, compliant with exemption
RoHS exemptions	**6a:** Lead as an alloying element in steel for machining purposes and in galvanised steel containing up to 0,35 % lead by weight

Identification	Size	Part number	Drawing (dimensions in mm)
Bearing pedestal, for Han® 10 A, 16 A, 32 A, 6 B, 10 B, 16 B, 24 B 		09 30 000 9964	
Han A® , Protection cover, for bearing pedestal, Thermoplastic 	10 A 16 A	09 20 010 5410 09 20 016 5410	
Han® B , Protection cover, for bearing pedestal, Metal 	06 B 10 B 16 B 24 B	09 30 006 5403 09 30 010 5404 09 30 016 5404 09 30 024 5404	
Han® B , Protection cover, for bearing pedestal, Thermoplastic 	06 B 10 B 16 B 24 B	09 30 006 5410 09 30 010 5410 09 30 016 5410 09 30 024 5410	

Further accessories

Technical characteristics

Material (accessories)	Metal, Thermoplastic

Technical characteristics

RoHS	compliant

Identification	Size	Part number	Drawing (dimensions in mm)
Han® B , Dust protection cover, for hoods, With board locks 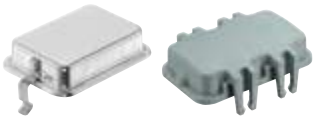	06 B 10 B 16 B	09 30 006 5401 09 30 010 5401 09 30 016 5401	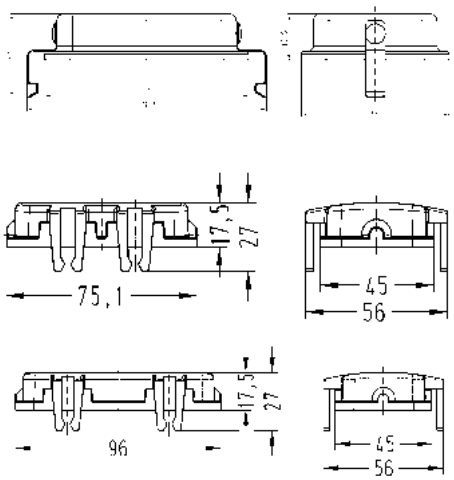
Han® B , Dust protection cover, for housings 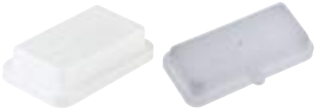	10 B 16 B 24 B	09 30 010 5406 09 30 016 5406 09 30 024 5406	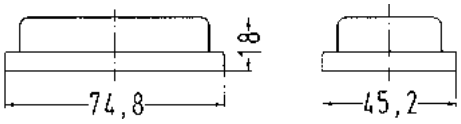
Han® HPR , Dust protection cover, for housings 	03 HPR 06 HPR 10 HPR 16 HPR 24 HPR	09 40 003 5406 09 40 006 5406 09 40 010 5406 09 40 016 5406 09 40 024 5406	

Further accessories

Identification	Size	Part number	Drawing (dimensions in mm)
Locking element, With cord, for Han® 10/16/24 B housings bulkhead mounting with Han-Easy Lock® double levers 		09 30 000 9986	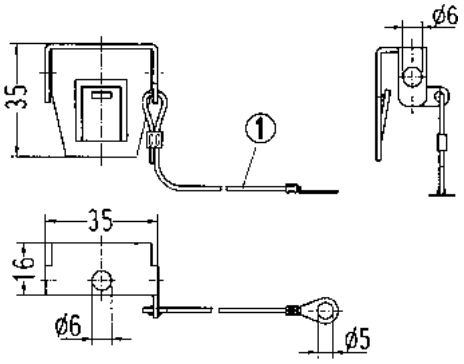 ① Length 120 mm
Locking element, With cord, for Han® 10/16/24 B with double metal levers 		09 30 000 9987	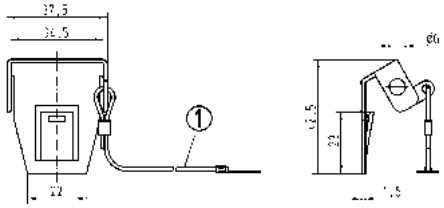 ① Length 120 mm
Mounting frames, for standard hoods/housings 	06 B 10 B 16 B 24 B	09 40 000 9921 09 40 000 9922 09 40 000 9923 09 40 000 9924	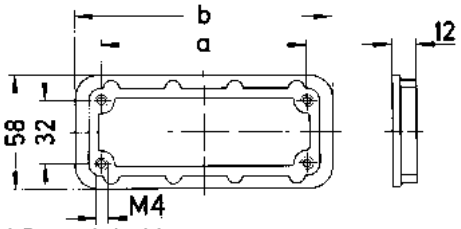 6 B: a=70; b=96 10 B: a=83; b=109 16 B: a=103; b=129 24 B: a=130; b=156
Frame, for custom test adapters, Pack contents: 2 assembly plates, 12 nuts for insertion 		09 38 000 9901	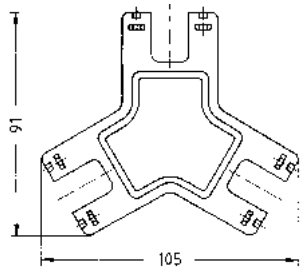
Label, According to CSA-approval, Pack contents: 50 labels per sheet 		09 30 000 9958	

Further accessories

Identification	Size	Part number	Drawing (dimensions in mm)
Contact lubricant DvDA, for Han® contacts, Pack contents: Vaporizer (40 ml), Handling instruction  Applicable onto Han® contacts to reduce mating and unmating forces. Content: Preperation of perfluorpolyethers		09 99 000 0829	

Han® tools

Contents	Page
Hand crimping tools for Han® standard contacts	**90.4**
Hand crimping tools for fibre optic contacts	**90.9**
Hand crimping tools for Han-Fast® Lock contacts	**90.10**
Hand crimping tools for wire end ferrules	**90.11**
Hand crimping tools for D-Sub contacts	**90.12**
Hand crimping tools for coaxial contacts	**90.13**
Pneumatic crimping tool	**90.15**
Hydraulic crimping tools for Han® TC high current contacts	**90.16**
Crimping machine TC-C01	**90.18**
Crimping machine TK-M	**90.20**
Crimping machine BK	**90.22**
Panel punch	**90.24**
Assembly tools	**90.25**
Removal tools	**90.29**
Stripping tools	**90.32**

Overview Han® crimping tools

Crimp contacts Series	Part number				mm²	AWG	Crimping tools						Tools
	male contact silver plated	female contact silver plated	male contact gold plated	female contact gold plated			09 99 000 0888	09 99 000 0110	09 99 000 0021	09 99 000 0001	09 99 000 0377	20 99 000 1035	removal tools
Han D® Signal contacts 09 15 000 .... 	6107	6207	6127	6227	0.14 - 0.25	26 - 24	x			x			09 99 000 0012
	6104	6204	6124	6224				x	x				
	6107	6207	6127	6227	0.37	22	x			x			
	6104	6204	6124	6224			x	x	x	x			
	6103	6203	6123	6223	0.5	20	x	x	x	x			
	6105	6205	6125	6225	0.75	18	x	x	x	x			
	6102	6202	6122	6222	1.0	18	x	x	x	x			
	6101	6201	6121	6221	1.5	16	x	x	x	x			
	6106	6206	6126	6226	2.5	14	x			x			
Han D® F.O. contacts 20 10 001	Male contact 3211 3212 / 3213		Female contact 3221 3222		1 mm POF							x	
Han E® Power contacts 09 33 000 .... 	6127	6227	6117	6217	0.14 - 0.37	26 - 22	x			x			09 99 000 0319
	6121	6220	6122	6222	0.5	20	x	x	x	x			
	6114	6214	6115	6215	0.75	18	x	x	x	x			
	6105	6205	6118	6218	1.0	18	x	x	x	x			
	6104	6204	6116	6216	1.5	16	x	x	x	x			
	6102	6202	6123	6223	2.5	14	x	x	x	x			
	6106	6206			3.0	12	x	x		x			
	6107	6207	6119	6221	4.0	12	x	x		x			
Han E® F.O. contacts 20 10 001	Male contact 3311		Female contact 3321		1 mm POF							x	
Han® C Power contacts 09 32 000 .... 	6104	6204			1.5	16	x	x		x			09 99 000 0305 / 09 99 000 0381
	6105	6205			2.5	14	x	x		x			
	6107	6207			4.0	12	x	x		x	x		
	6108	6208			6.0	10					x		
	6109	6209			10.0	8					x		
Han-*Yellock*® Power contacts 11 05 000 .... 	6101	6201	6121	6221	0.14 - 0.37	26 - 22	x			x			09 99 000 0319
	6102	6202	6122	6222	0.5	20	x	x	x	x			
	6103	6203	6123	6223	0.75	18	x	x	x	x			
	6104	6204	6124	6224	1.0	18	x	x	x	x			
	6105	6205	6125	6225	1.5	16	x	x	x	x			
	6106	6206	6126	6226	2.5	14	x	x	x	x			
	6107	6207	6127	6227	3.0	12	x	x		x			
	6108	6208	6128	6228	4.0	12	x	x		x			
Description													
Locator Han D®	09 99 000 0311									x			
Locator Han E®	09 99 000 0310									x			
Locator Han® C	09 99 000 0308									x			
Locator Han-*Yellock*®	09 99 000 0341							x					
	09 99 000 0343								x				
	09 99 000 0342									x			

Overview Han® crimping tools

Crimp contacts Series	Part number				mm²	AWG	Crimping machines								
	male contact silver plated	female contact silver plated	male contact gold plated	female contact gold plated			09 99 000 0314	09 99 000 0307	09 98 000 6901 1)	09 98 000 6902 1)	09 98 000 6903 1)	09 98 000 6907 1)	09 98 000 9001	09 98 000 9002	09 98 000 9003
Han D® Signal contacts 09 15 000 .... 	6107	6207	6127	6227	0.14 - 0.25	26 - 24	x		x2)				x		
	6104	6204	6124	6224											
	6107	6207	6127	6227	0.37	22	x		x				x		
	6104	6204	6124	6224					x				x		
	6103	6203	6123	6223	0.5	20	x		x				x		
	6105	6205	6125	6225	0.75	18	x		x				x		
	6102	6202	6122	6222	1.0	18	x		x				x		
	6101	6201	6121	6221	1.5	16	x		x				x		
	6106	6206	6126	6226	2.5	14			x				x		
Han E® Power contacts 09 33 000 .... 	6127	6227	6117	6217	0.14 - 0.37	26 - 22	x			x2)				x	
	6121	6220	6122	6222	0.5	20	x			x				x	
	6114	6214	6115	6215	0.75	18	x			x				x	
	6105	6205	6118	6218	1.0	18	x			x				x	
	6104	6204	6116	6216	1.5	16	x			x				x	
	6102	6202	6123	6223	2.5	14	x			x				x	
	6106	6206			3.0	12	x			x				x	
	6107	6207	6119	6221	4.0	12	x			x				x	
Han-*Yellock*® Power contacts 11 05 000 .... 	6101	6201	6121	6221	0.14 - 0.37	26 - 22						x			
	6102	6202	6122	6222	0.5	20						x			
	6103	6203	6123	6223	0.75	18						x			
	6104	6204	6124	6224	1.0	18						x			
	6105	6205	6125	6225	1.5	16						x			
	6106	6206	6126	6226	2.5	14						x			
	6107	6207	6127	6227	3.0	12						x3)			
	6108	6208	6128	6228	4.0	12						x3)			
Han® C Power contacts 09 32 000 .... 	6104	6204			1.5	16	x	x			x				x
	6105	6205			2.5	14	x	x			x				x
	6107	6207			4.0	12	x	x			x				x
	6108	6208			6.0	10		x			x				x
	6109	6209			10.0	8		x							x

1) TK-M basic machine 09 98 000 6900 is required
2) depending on the wire
3) only with modification 09 98 503 6900

Hand crimping tools for Han® standard contacts

Details

The high end tool with best performance.

Details

for wire gauges from 0.14 und 0.25 mm² please use the contacts 09 15 000 6107, 6207, 6127 or 6227.

Identification	Part number	
Crimping tool, Han D®: 0.14 ... 2.5 mm², Han E®: 0.14 ... 4 mm², Han-*Yellock*®: 0.14 ... 4 mm², Han® C: 1.5 ... 4 mm², Pack contents: incl. locator, Handling instruction	09 99 000 0888	
Check gauge, for crimping tool 09 99 000 0888, for optional testing	09 99 000 0889	
Locator, Spare part, for crimping tool 09 99 000 0888	09 99 000 0887	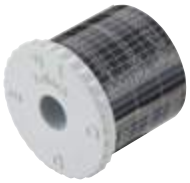

Details

for wire gauges from 0.14 und 0.25 mm² please use the contacts 09 15 000 6107, 6207, 6127 or 6227.

Identification	Conductor cross-section (mm²)	Part number	
Crimping tool, Han D®: 0.14 ... 2.5 mm², Han E®: 0.14 ... 4 mm², Han-*Yellock*®: 0.14 ... 4 mm², Han® C: 1.5 ... 4 mm² Please order locator separately.	0,14 ... 4	09 99 000 0001	
Locator, Han D®	0,14 ... 2,5	09 99 000 0311	
Locator, Han E®	0,14 ... 4	09 99 000 0310	
Locator, Han® C	1,5 ... 4	09 99 000 0308	
Locator, Han E®, Relay contacts	0,14 ... 4	09 99 000 0345	
Adjustment gauge, Adjustment gauge set for Buchanon tool, Han D®, Han E®, Han® C, Han-*Yellock*®	0,14 ... 4	09 99 000 0379	

Details

Robust allrounder with very good performance.

Identification	Conductor cross-section (mm²)	Part number	
Crimping tool, Han D®: 0.14 ... 1.5 mm², Han E®: 0.5 ... 4 mm², Han-*Yellock*®: 0.5 ... 4 mm², Han® C: 1.5 ... 4 mm², Pack contents: incl. locator, Han D®, Han E®, Han® C, Please order Han-*Yellock*® separately.	0,14 ... 4	09 99 000 0110	
Locator, Han-*Yellock*®		09 99 000 0341	
Locator, Spare part, Han D®, Han E®, Han® C		09 99 000 0376	

Details

The service tool for on-site maintenance.

Identification	Conductor cross-section (mm²)	Part number	
Service crimping tool, Han D®: 0.14 ... 1.5 mm², Han E®: 0.5 ... 2.5 mm², Han-*Yellock*®: 0.5 ... 2.5 mm², Pack contents: incl. locator, Please order Han-*Yellock*® separately.	0,14 ... 2,5	09 99 000 0021	
Locator, Han-*Yellock*®		09 99 000 0343	
Locator, Spare part, Han D®, Han E®		09 99 000 0022	

Details

The professional tool for big cross-sections.

Identification	Conductor cross-section (mm²)	Part number	
Crimping tool, Han® C: 4 ... 10 mm², Pack contents: incl. locator	4 ... 10	09 99 000 0377	
Locator, Spare part, Han® C: 4 ... 10 mm²		09 99 000 0963	

Hand crimping tools for fibre optic contacts

Identification	Part number	
Crimping tool, for FO connector (glass fibre), SC, F-SMA F-ST, A/F 3.8 mm, A/F 4.3 mm, A/F 4.95 mm for crimping of the strain relief	20 99 000 1031	
Crimping tool, for FO connector (plastic fibre), SC, F-SMA F-ST, A/F 3 mm, A/F 4.95 mm, A/F 6.5 mm for crimping of the strain relief	20 99 000 1033	
Crimping tool, for following 1 mm POF contacts, Han D®, Han E®, DIN 41626, Ferrule, F-SMA, -ST	20 99 000 1035	

Hand crimping tools for Han-Fast® Lock contacts

Identification	Conductor cross-section (mm²)	Part number	
Crimping tool, Angled, for Han-Fast® Lock single contact	1,5 ... 2,5 4 ... 10	09 99 000 0876 09 99 000 0877	
Crimping tool, for Han-Fast® Lock single contact, incl. locator	1,5 ... 2,5 4 ... 10	09 99 000 0881 09 99 000 0831	

Details

The tool for the professional processing of wire end ferrules according to DIN 46228.

Identification	Conductor cross-section (mm²)	Part number	
Crimping tool, for wire end ferrules, acc. to DIN 46228	0,14 ... 2,5 4 ... 16	09 99 000 0970 09 99 000 0971	 

Hand crimping tools for D-Sub contacts

Identification	Conductor cross-section (mm²)	Part number	
Crimping tool, for 500 bandoliered standard contacts	0,09 ... 0,56	09 99 000 0169	
Crimping tool, for single stamped D-Sub contact	0,09 ... 0,56	09 99 000 0175	
Crimping tool, for turned male and female contact, 4 indent crimp in acc. to MIL 22 520/2-01	0,09 ... 0,82	09 99 000 0501	
Locator, for single D-Sub standard contacts		09 99 000 0531	
Locator, for single D-Sub standard contacts, 09 93 000 5576 + 09 93 000 5476		09 99 000 0897	

Hand crimping tools for coaxial contacts

Identification	Conductor cross-section (mm²)	Part number	
Crimping tool, for turned male and female contact, 4 indent crimp in acc. to MIL 22 520/2-01	0,09 ... 0,82	09 99 000 0501	
D-Sub , Locator, for inner contact die		09 99 000 0507	 Contacts 09 69 182 x140 + 09 69 282 x140 09 69 182 x230 + 09 69 282 x230

Hand crimping tools for coaxial contacts

Identification	Part number	
Crimping tool, for coaxial contact, acc. to DIN 41626, for outer ferrule Please order crimp dies separately.	09 99 000 0503	
Crimp die, for D-Sub	09 99 000 0508	 Contacts 09 69 182 x140 + 09 69 282 x140 09 69 182 x230 + 09 69 282 x230 09 69 181 x140 + 09 69 281 x140 09 69 181 x141 + 09 69 281 x141 09 69 181 x230 + 09 69 281 x230
Crimp die, for D-Sub mixed	09 99 000 0515	 Contacts 09 69 181 x143 + 09 69 281 x143
Crimping tool, Crimp die included, for coaxial contact, acc. to DIN 41626	09 99 000 0194	 Contacts 09 14 000 6211 + 09 14 000 6111 09 14 000 6221 + 09 14 000 6121

Pneumatic crimping tool

Identification	Part number	
Pneumatic crimping tool, Han D®: 0.14 ... 2.5 mm², Han E®: 0.14 ... 4 mm², Han® C: 1.5 ... 4 mm², Pack contents: In plastic case, Locator Han® C, Locator Han E®, Locator Han D®, Adjustment gauge, Pneumatic tube, Operating instructions	09 99 000 0314	
Pneumatic crimping tool, Han® C: 1.5 ... 10 mm², Pack contents: In plastic case, Locator Han® C, Pneumatic tube, Operating instructions	09 99 000 0307	
Table fixing, for part number 09 99 000 0307 and 09 99 000 0314	09 99 000 0309	
Foot switch, for part number 09 99 000 0307 and 09 99 000 0314	09 99 000 0347	

Specifications and approvals

DIN 46235

Identification	Conductor cross-section (mm²)	Part number	Drawing (dimensions in mm)
Battery hydraulic tool, Pressing force 60 kN, Crimp die acc. to DIN 46235 with pressing width 9 mm	10 ... 70	09 99 000 0850	
Hydraulic handtool, Pressing force 60 kN, Crimp die acc. to DIN 46235 with pressing width 9 mm	10 ... 70	09 99 000 0851	
Crimp die, for 60 kN tool, Pack contents: Supplied as a pair	10 16 25 35 50 70	09 99 000 0852 09 99 000 0853 09 99 000 0854 09 99 000 0855 09 99 000 0856 09 99 000 0857	

Cross-section	Pressing width	Identification	Contacts
10 mm²	9 mm	6	TC 70, TC 100
16 mm²	9 mm	8	TC 70, TC 100
25 mm²	9 mm	10	TC 70, TC 100, TC 200, TC 250, TC 350
35 mm²	9 mm	12	TC 100, TC 200, TC 250, TC 350
50 mm²	9 mm	14	TC 200, TC 250, TC 350
70 mm²	9 mm	16	TC 200, TC 250, TC 350, TC 650

Specifications and approvals

DIN 46235

Identification	Conductor cross-section (mm²)	Part number	Drawing (dimensions in mm)
Battery hydraulic tool, Pressing force 120 kN, Crimp die acc. to DIN 46235 with pressing width 10 ... 14 mm	10 ... 240	09 99 000 0860	
Hydraulic handtool, Pressing force 120 kN, Crimp die acc. to DIN 46235 with pressing width 10 ... 14 mm	10 ... 240	09 99 000 0861	
Crimp die, for 120 kN tool, Pack contents: Supplied as a pair	10 16 25 35 50 70 95 120 150 185 240	09 99 000 0862 09 99 000 0863 09 99 000 0864 09 99 000 0865 09 99 000 0866 09 99 000 0867 09 99 000 0868 09 99 000 0869 09 99 000 0870 09 99 000 0871 09 99 000 0872	

Cross-section	Pressing width	Identification	Contacts
10 mm²	10 mm	6	TC 70, TC 100
16 mm²	10 mm	8	TC 70, TC 100
25 mm²	10 mm	10	TC 70, TC 100, TC 200, TC 250, TC 350
35 mm²	10 mm	12	TC 100, TC 200, TC 250, TC 350
50 mm²	13 mm	14	TC 200, TC 250, TC 350
70 mm²	13 mm	16	TC 200, TC 250, TC 350, TC 650
95 mm²	14 mm	18	TC 350, TC 650
120 mm²	14 mm	20	TC 350, TC 650
150 mm²	10 mm	22	TC 650
185 mm²	10 mm	25	TC 650
240 mm²	10 mm	28	TC 650

Crimping machine TC-C01

Features

- Basic unit of compact construction for pre-stripped wires (stranded wire)
- Easy handling due to well-arranged design
- for individual, turned male and female contacts
- Selective processing of male and female contacts
- Automatic contact feed
- Reproducible, top quality gas-tight crimp connections
- Non-slip, anti-vibration adjustable feet for setting the height
- Low noise level
- With carrying handle
- Removable electric and pneumatic supply connections
- Maintenance interval counter
- Minimal setup effort
- Stepless adjustment of the crimping depth
- Low follow-up costs for maintenance and repair
- Easy replacement of wearing components

Details

Nominal voltage, max. 230 V
Nominal frequency 50 Hz
Power consumption ca.0.2 kW
Pressure ca.6 bar
Control system PLC
Work cycle trigger Footswitch
Work cycle 1 s
Noise level ca.62 dB
Crimp type Four-point crimping
Contact feed Vibratory bowl feed
Stroke counters Resettable daily counter and permanent counter
Dimensions 345 x 230 x 400 mm
Weight ≥24 kg

Pack contents:
2.0 m connection cable and grounding plug,
2.0 m pneumatic hose,
quick-release coupling and N6 plugin nipple,
footswitch,
carrying handle,
operating instructions,
declaration of conformity

Crimping machine TC-C01

Identification	Conductor cross-section (mm²)	Part number	Drawing (dimensions in mm)
Crimping machine TC-C01, for Han D® contact	0,14 ... 2,5	09 98 000 9001	
Crimping machine TC-C01, for Han E® contact	0,14 ... 4	09 98 000 9002	
Crimping machine TC-C01, for Han® C contact	1,5 ... 10	09 98 000 9003	
Maintenance unit, Optional accessory		09 98 336 6851	

Crimping machine TK-M

Features

- Basic unit of compact construction
- Fast stripping and crimping in one operating step
- Easy handling due to well-arranged design
- Touchscreen controlling
- for individual, turned male and female contacts
- Selective processing of male and female contacts
- Contact magazine with filling control
- Reproducible, top quality gas-tight crimp connections
- Infinitely variable adjustment parameters (stripping depth, stripping length, crimping depth, crimp contact feed rate)
- Rotatable vibration feeder and actuator in basic unit
- Low noise level
- for oil-free compressed air
- Minimal setup effort
- Low maintenance costs

Details

Drive electro-pneumatic
Nominal voltage, max. 230 V
Nominal frequency 50 Hz
Power consumption ca.0.75 kW
Pressure ca.6 bar
Compressed air connection 3 dm^3 / work cycle
Control system PLC
Work cycle trigger sensor
Work cycle 1.5 s
Noise level <70 dB
Crimp type Four-point crimping
Contact feed Vibratory bowl feed
Stroke counters Resettable daily counte, total counter, operating hours, maintenance counter and quantity preselection
Dimensions 580 x 470 x 470 mm
Weight <60 kg

Pack contents:

one mounted interchangeable unit,
2.0 m connection cable and grounding plug,
2.0 m pneumatic hose with plug-in nipple N6,
plug gauges for setting the crimping,
centering bush for positioning the plug gauges,
draw for insulation remains,
drawer for holding the contacts when the magazine is emptied,
tool set for setting,
1 set of stripping blades,
operating instructions,
declaration of conformity

Crimping machine TK-M

Identification	Conductor cross-section (mm²)	Part number	
Crimping machine TK-M, Basic machine without interchangeable unit, Pack contents: Tool set for setting, 1 set of stripping blades, Operating instructions, Declaration of Conformity		09 98 000 6900	
Interchangeable unit, Han D®	0,14 ... 2,5	09 98 000 6901	
Interchangeable unit, Han E®	0,14 ... 4	09 98 000 6902	
Interchangeable unit, Han® C	1,5 ... 6	09 98 000 6903	
Interchangeable unit, D-Sub	0,09 ... 0,82	09 98 000 6904	
Interchangeable unit, Han-*Yellock*®	0,14 ... 2,5	09 98 000 6907	

Crimping machine BK

Features

- Fast stripping and crimping in one operating step
- Easy handling due to quick change tool and stripper
- Suitable for standard D-Sub crimp contacts
- Selective processing of male and female contacts
- Hand wheel for manual adjustments
- Maintenance-friendly through needle bearing rail
- Automatic exhaust of the isolation remainders
- Reproducible, top quality gas-tight crimp connections
- With crimp force monitor
- Setting parameters with raster rotary button (depth of insulation stripping, length of insulation stripping, crimping heigth on wire, crimping heigth on isulation, wire retainer position, band thrust and wire position in the crimp contact)
- Non slip and anti-vibration feet
- Low noise level
- for oil-free compressed air
- Low maintenance costs
- V-blades for special wires on request

Details

Drive electro-pneumatic
Nominal voltage, max. 230 V
Nominal frequency 50 Hz
Power consumption 0.75 kW
Pressure 6 bar
Control system PLC
Stripping device type 514
Suction apparatus 2000.0900.20
Work cycle trigger sensor
Work cycle 0.35 s
Noise level 85 dB
Illumination integrated tool light 20001326
Motor speed 440 –2000 rpm
Stroke counters Resettable daily counter and permanent counter
Dimensions 690 (with a contact reel: 1400) x 420 x 430 mm
Weight <72 kg

Pack contents:
with role owner and guide plate,
2.0 m connection cable and grounding plug,
2.0 m pneumatic hose with plug-in nipple N9,
oiler bottle for the lubricating of the crimping contacts,
tool set for setting,
1 set of stamps for wire and isolation-crimp,
1 anvil one-piece for wire and isolation-crimp,
1 set of stripping blades,
1 litre of contact oil,
operating instructions,
declaration of conformity

Crimping machine BK

Identification	Conductor cross-section (mm²)	Part number	
Crimping machine BK, Pack contents: With role owner and guide plate, Tool set for setting, 1 set of stripping blades, Operating instructions, Declaration of Conformity		09 98 000 5000	
Quick change tool, D-Sub	0,09 ... 0,25 0,25 ... 0,5	09 98 000 3008 09 98 000 3009	

Technical characteristics

RoHS	compliant

Identification	Size	Part number	
Battery hydraulic panel punch, To produce panel cut outs for connectors, Punching pressure: 60 kN, Pack contents: In plastic case, Lithium-Ion battery 18 V, 3 Ah, Charging set, Accessories		09 99 000 0900	
Hydraulic hand panel punch, To produce panel cut outs for connectors, Punching pressure: 60 kN, Pack contents: In plastic case, Accessories		09 99 000 0901	
Punch units for hydraulicpunch drivers, max. plate thickness (structural grade carbon steel): 2.0 mm	3 HPR Han-Eco® 10 A Han-Eco® 16 A Han-*Yellock*® 10 Han-*Yellock*® 30 Han-*Yellock*® 60 Modular Compact	09 99 000 0906 09 99 000 0914 09 99 000 0915 09 99 000 0910 11 99 300 0001 11 99 600 0001 09 99 000 0912	
Han-Eco® B, Punch units for hydraulicpunch drivers, max. plate thickness (structural grade carbon steel): 2.0 mm	06 B 10 B 16 B 24 B	09 99 000 0916 09 99 000 0917 09 99 000 0918 09 99 000 0919	
Han A® , Punch units for hydraulicpunch drivers, max. plate thickness (structural grade carbon steel): 2.0 mm	03 A 10 A 16 A	09 99 000 0907 09 99 000 0908 09 99 000 0909	
Han® B , Punch units for hydraulicpunch drivers, max. plate thickness (structural grade carbon steel): 2.0 mm	06 B 10 B 16 B 24 B	09 99 000 0902 09 99 000 0903 09 99 000 0904 09 99 000 0905	

Identification	Part number	
Torque set, for High Current axial screw contact, incl. reversing blade (A/F 4.0 + A/F 5.0), Tightening torque: 5 ... 14 Nm, Pack contents: High quality metal box, Variable tightening torque tool TorqueVario®-STplus, Setting tool: torque-setter, HARTING optimised interchangeable blades hexagonal A/F 4, HARTING optimised interchangeable blades hexagonal A/F 5	09 99 000 0833	
Torque set, for power contact, incl. reversing blade (A/F 2.0 + A/F 2.5 + PH2), + different bits, + adapter blade, Tightening torque: 1 ... 5 Nm, Pack contents: High quality metal box, Variable tightening torque tool TorqueVario®-S, Setting tool: torque-setter, HARTING optimised interchangeable blades hexagonal A/F 2, HARTING optimised interchangeable blades hexagonal A/F 2.5, HARTING optimised interchangeable blades PH2, Torque bit universal holder, Bits: A/F3, A/F4 , PH0, PH1, PH2, T10, T15, T20, slot 0.6 x 4.5, slot 0.8 x 5.5	09 99 000 0834	
Torque set, for HARTING screw contacts and fixing screws, Tightening torque: 0.5 ... 1.2 Nm, Pack contents: High quality metal box, Two pre-set tightening torque screwdrivers TorqueFix®, Interchangeable blades PH1, PH2, slot 0.5 x 3.0	09 99 000 0835	

Identification	Part number	
Insertion tool for crimp contacts, Small cross-section, Variable length of blade, Han D®, Han E®, Han-*Yellock*®	09 99 000 0847	
Replacement-tip, for part number 09 99 000 0847	09 99 000 0848	
Assembly tool, for Han® ES insert	09 99 000 0367	
Torque set, for guiding pins and bushes, Tightening torque: 0.5 Nm, incl. 1/4” Bit, Pack contents: Torque bit universal holder ¼”, 1 HARTING guiding pins and bushes bit, Product comes already pre-assembled in practical plastic packaging	09 99 000 0840	
Bit ¼” as a spare part for guiding pins and bushes	09 99 000 0841	
Hexagonal driver for axial screw, With grip, A/F 4 (e. g. Han® 100 A Axial module)	09 99 000 0363	
Hexagonal driver for axial screw, With grip, A/F 5 (e. g. Han® 200 A Axial module)	09 99 000 0364	
Hexagonal driver for axial screw, Bit ¼”, 40 A contact (A/F 2)	09 99 000 0369	
Hexagonal driver for axial screw, Adapter 3/8”, A/F 4 (e. g. Han® 100 A Axial module)	09 99 000 0370	

Identification	Part number	
Hexagonal driver for axial screw, Adapter 3/8”, A/F 5 (e. g. Han® 200 A Axial module)	09 99 000 0371	
Hexagonal driver for axial screw, Adapter 3/8”, A/F 8 (e. g. Han® HC Modular 650)	09 99 000 0372	
Hexagonal driver for axial screw, Bit ¼”, 70 A contact (A/F 2.5)	09 99 000 0375	
Han® VDE Screw Driver Set, The standard set, Pack contents: Slim bit screw driver 0.4 x 2.5, Slim bit screw driver 0.5 x 3.0, Slim bit screw driver 0.6 x 3.5, Slim bit screw driver 1.0 x 4.5, Phillips screw driver PH1 (191 x 30 mm), Phillips screw driver PH2 (218 x 23 mm)	09 99 000 0836	
Screw driver set Slimline, Insolated blade for slim assembly, Pack contents: Slim bit screw driver 0.6 x 3.5, Slim bit screw driver 0.8 x 4.5, Phillips screw driver PH1 (191 x 30 mm), Phillips screw driver PH2 (218 x 36 mm)	09 99 000 0844	

Technical characteristics

RoHS compliant

Identification	Part number	Drawing (dimensions in mm)
Polishing paper, for POF grain size 1000, Pack contents: Each part number means 5 pieces	20 80 001 9911	
Polishing paper, for GI 9 µ-grain size, Pack contents: Each part number means 5 pieces	20 80 001 9912	
Polishing paper, for GI 1 µ-grain size, Pack contents: Each part number means 5 pieces	20 80 001 9913	
Polishing tool, DIN 41612 	20 99 000 1092	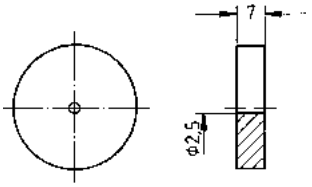
Polishing tool, POF cable 2.2 mm diameter 	20 99 000 1093	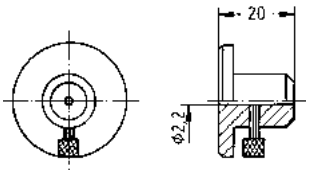
Polishing tool, SC	20 99 000 1097	

Removal tools

Identification	Conductor cross-section (mm²)	Part number	
Removal tool, Han D®		09 99 000 0012	
Replacement-tip, for part number 09 99 000 0012		09 99 000 0004	
Removal tool, Han E®		09 99 000 0319	
Removal tool, Han® C	1,5 ... 6 10	09 99 000 0305 09 99 000 0381	
Removal tool, Han® C module, 09 14 003 3001 / 09 14 003 3101		09 99 000 0315	
Insertion / removal tools, Han-Modular®, for D-Sub crimp contact		09 99 000 0368	
Removal tool, Han-Quintax®, for Quintax contact		09 99 000 0323	
Removal tool, for contacts in the multi module		09 99 000 0328	
Removal tool, Han D®, Service		09 99 000 0052	
Removal tool, Han-Fast® Lock, for easier removal of the Fast-Lock contact from the printed circuit board		09 99 000 0837	

Removal tools

Identification	Conductor cross-section (mm²)	Part number	
Removal tool, for LC contact in the Han® LC module		09 99 000 0843	
Removal tool, for pneumatic contacts		09 99 000 0899	
Removal tool, Han-Modular®, Han-Eco®, Han-*Yellock*®, for single modules, Metal		09 99 000 0828	
Removal tool, Han-Modular®, for double modules		09 99 000 0842	
Removal tool, for all Han-Modular® modules in plastic frames You need 2 pieces for the removal of a single module and 4 pieces for the double module.		09 99 000 0331	
Removal tool, Han-Modular®		09 99 000 0335	
Removal tool, for the Han® 100 A crimp module		09 99 000 0383	
Removal tool, for the Han® 200 A crimp module Insert from mating side.		09 99 000 0820	
Removal tool, for the Han® 100 A single module, for Han® GND		09 99 000 0827	
Removal tool, Han® Megabit module		09 99 000 0880	

Removal tools

Identification	Conductor cross-section (mm²)	Part number	
Removal tool, for locking sleeves in the HV module,		09 99 000 0327	
Removal tool, for Han-*Yellock*® modules and frames, Thermoplastic		11 99 000 0001	
Removal tool, for Han-*Yellock*® modules and frames, Metal		11 99 000 0002	
Removal tool, for Han® HC Modular 250 Crimp, for unlocking the fixing plate Insert from mating side.		09 99 000 0332	
Removal tool, Han® EasyCon, for assembly and disassembly of shielding clamps		09 99 000 0334	

Technical characteristics

RoHS compliant

Identification	Conductor cross-section (mm²)		Part number	
Stripping tool, Self-adjusting	0,03 ... 10		09 99 000 0808	
Stripping tool	0,08 ... 10		09 99 000 0159	
Fibre stripper		0.18/0.3 mm 0.3 mm 1 mm	20 99 000 1046 20 99 000 1041 20 99 000 1045	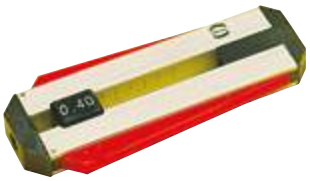

Altanium Temperature Controllers and Ultra Hot Runners provide superior melt delivery for the Plastics Industry.

Husky Hot Runner Systems with HARTING Han® 24 E connectors providing power and signal – quality connections resulting in highest reliability and minimum down time in molding systems.

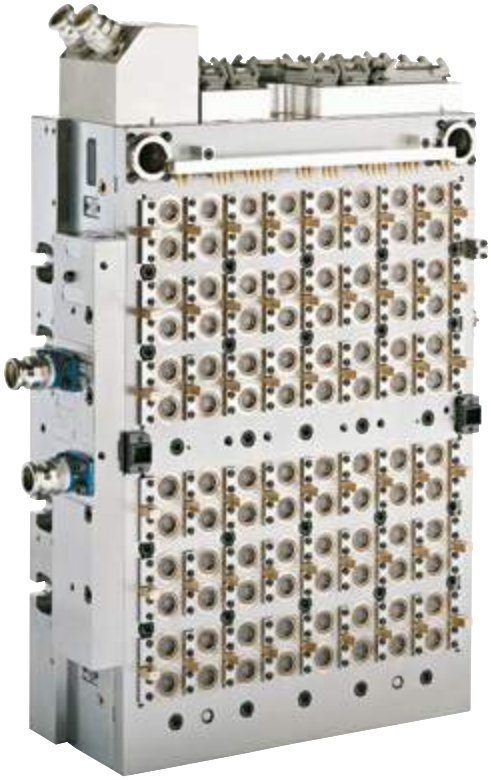



Photo courtesy:
Husky Injection Molding Systems, Bolton, Ontario, Canada

HARTING eCatalogue



The **HARTING eCatalogue / eShop** can be found on our homepage at **www.HARTING.com** or at the direct link **www.eCatalogue.HARTING.com**.

The HARTING e-Catalogue is your platform for conveniently selecting individual products as well as configuring complete solutions. Our comprehensive product pages provide you with all necessary technical information and CAD files in various formats for downloading. You may also contact our technical sales department directly.

Find out about **product innovations and news** on the start page of the HARTING e-Catalogue or go directly to **www.product-news.HARTING.com**.

Registered users can take advantage of MyHARTING to check on availability or prices, and to place or track their orders. Here, your customized „HARTING history“ provides you with a list of your inquiries, quotations and more.

Sign up now for your free e-Catalogue account at HARTING!

www.eShop.HARTING.com

Pushing Performance

www.HARTING.ae
www.HARTING.at
www.HARTING.com.au
www.HARTING.be
www.HARTING.com.br
www.HARTING.ca
www.HARTING.ch
www.HARTING.com.cn
www.HARTING.cz
www.HARTING.de
www.HARTING.dk
www.HARTING.es
www.HARTING.fi
www.HARTING.fr
www.HARTING.co.uk
www.HARTING.com.hk
www.HARTING.hu
www.HARTING.co.in
www.HARTING.it
www.HARTING.co.jp
www.HARTING.co.kr
www.HARTINGbv.nl
www.HARTING.no
www.HARTING.pl
www.HARTING.pt
www.HARTING.ro
www.HARTING.ru
www.HARTING.se
www.HARTING.sg
www.HARTING.sk
www.HARTING.com.tr
www.HARTING.com.tw
www.HARTING-USA.com
www.HARTING.co.za

HARTING.com –
the gateway to your country website.

HARTING Technology Group
info@HARTING.com
www.HARTING.com

MO/2018-08-22/3.0 98 41 002 0201 Version 02 11